ASCE STANDARD

ASCE/SEI 41–13

Seismic Evaluation and Retrofit of Existing Buildings

This document uses both the International System of Units (SI) and customary units

ASCE

SEI STRUCTURAL ENGINEERING INSTITUTE

American Society of Civil Engineers

Seismic Evaluation and Retrofit of Existing Buildings

This document uses both the International System of Units (SI) and customary units.

Published by the American Society of Civil Engineers

Library of Congress Cataloging-in-Publication Data

ASCE standard ASCE/SEI 41-13 : American Society of Civil Engineers : seismic evaluation and retrofit of existing buildings.
pages cm. – (Standard ; 41-13)
ISBN 978-0-7844-1285-5 (print : alk. paper) – ISBN 978-0-7844-7791-5 (ebook) 1. Buildings–Earthquake effects. 2. Earthquake resistant design. 3. Earthquake hazard analysis. I. American Society of Civil Engineers. II. Title: American Society of Civil Engineers, seismic evaluation and retrofit of existing buildings.
TH1095.A83 2014
693.8′52021873–dc23

2013017849

Published by American Society of Civil Engineers
1801 Alexander Bell Drive
Reston, Virginia 20191
www.asce.org/pubs

This standard was developed by a consensus standards development process that has been accredited by the American National Standards Institute (ANSI). Accreditation by ANSI, a voluntary accreditation body representing public and private sector standards development organizations in the United States and abroad, signifies that the standards development process used by ASCE has met the ANSI requirements for openness, balance, consensus, and due process.

While ASCE's process is designed to promote standards that reflect a fair and reasoned consensus among all interested participants, while preserving the public health, safety, and welfare that is paramount to its mission, it has not made an independent assessment of and does not warrant the accuracy, completeness, suitability, or utility of any information, apparatus, product, or process discussed herein. ASCE does not intend, nor should anyone interpret, ASCE's standards to replace the sound judgment of a competent professional, having knowledge and experience in the appropriate field(s) of practice, nor to substitute for the standard of care required of such professionals in interpreting and applying the contents of this standard.

ASCE has no authority to enforce compliance with its standards and does not undertake to certify products for compliance or to render any professional services to any person or entity.

ASCE disclaims any and all liability for any personal injury, property damage, financial loss, or other damages of any nature whatsoever, including without limitation any direct, indirect, special, exemplary, or consequential damages, resulting from any person's use of, or reliance on, this standard. Any individual who relies on this standard assumes full responsibility for such use.

ASCE and American Society of Civil Engineers—Registered in U.S. Patent and Trademark Office.

Photocopies and permissions. Permission to photocopy or reproduce material from ASCE publications can be requested by sending an e-mail to permissions@asce.org or by locating a title in ASCE's Civil Engineering Database (http://cedb.asce.org) or ASCE Library (http://ascelibrary.org) and using the "Permissions" link.

Errata: Errata, if any, can be found at http://dx.doi.org/10.1061/9780784412855.

Copyright © 2014 by the American Society of Civil Engineers.
All Rights Reserved.
ISBN 978-0-7844-1285-5 (paper)
ISBN 978-0-7844-7791-5 (PDF)
Manufactured in the United States of America.

STANDARDS

In 2006, the Board of Direction approved the revision to the ASCE Rules for Standards Committees to govern the writing and maintenance of standards developed by the Society. All such standards are developed by a consensus standards process managed by the Society's Codes and Standards Committee (CSC). The consensus process includes balloting by a balanced standards committee made up of Society members and nonmembers, balloting by the membership of the Society as a whole, and balloting by the public. All standards are updated or reaffirmed by the same process at intervals not exceeding five years.

The following standards have been issued:

ANSI/ASCE 1-82 N-725 Guideline for Design and Analysis of Nuclear Safety Related Earth Structures
ASCE/EWRI 2-06 Measurement of Oxygen Transfer in Clean Water
ANSI/ASCE 3-91 Standard for the Structural Design of Composite Slabs and ANSI/ASCE 9-91 Standard Practice for the Construction and Inspection of Composite Slabs
ASCE 4-98 Seismic Analysis of Safety-Related Nuclear Structures
Building Code Requirements for Masonry Structures (ACI 530-13/ASCE 5-13/TMS 402-13) and Specifications for Masonry Structures (ACI 530.1-13/ASCE 6-13/TMS 602-13)
ASCE/SEI 7-10 Minimum Design Loads for Buildings and Other Structures
SEI/ASCE 8-02 Standard Specification for the Design of Cold-Formed Stainless Steel Structural Members
ANSI/ASCE 9-91 listed with ASCE 3-91
ASCE 10-97 Design of Latticed Steel Transmission Structures
SEI/ASCE 11-99 Guideline for Structural Condition Assessment of Existing Buildings
ASCE/EWRI 12-13 Standard Guidelines for the Design of Urban Subsurface Drainage
ASCE/EWRI 13-13 Standard Guidelines for the Installation of Urban Subsurface Drainage
ASCE/EWRI 14-13 Standard Guidelines for the Operation and Maintenance of Urban Subsurface Drainage
ASCE 15-98 Standard Practice for Direct Design of Buried Precast Concrete Pipe Using Standard Installations (SIDD)
ASCE 16-95 Standard for Load Resistance Factor Design (LRFD) of Engineered Wood Construction
ASCE 17-96 Air-Supported Structures
ASCE 18-96 Standard Guidelines for In-Process Oxygen Transfer Testing
ASCE 19-10 Structural Applications of Steel Cables for Buildings
ASCE 20-96 Standard Guidelines for the Design and Installation of Pile Foundations
ANSI/ASCE/T&DI 21-13 Automated People Mover Standards
SEI/ASCE 23-97 Specification for Structural Steel Beams with Web Openings
ASCE/SEI 24-05 Flood Resistant Design and Construction
ASCE/SEI 25-06 Earthquake-Actuated Automatic Gas Shutoff Devices
ASCE 26-97 Standard Practice for Design of Buried Precast Concrete Box Sections
ASCE 27-00 Standard Practice for Direct Design of Precast Concrete Pipe for Jacking in Trenchless Construction
ASCE 28-00 Standard Practice for Direct Design of Precast Concrete Box Sections for Jacking in Trenchless Construction
ASCE/SEI/SFPE 29-05 Standard Calculation Methods for Structural Fire Protection
SEI/ASCE 30-00 Guideline for Condition Assessment of the Building Envelope
SEI/ASCE 31-03 Seismic Evaluation of Existing Buildings
SEI/ASCE 32-01 Design and Construction of Frost-Protected Shallow Foundations
EWRI/ASCE 33-09 Comprehensive Transboundary International Water Quality Management Agreement
EWRI/ASCE 34-01 Standard Guidelines for Artificial Recharge of Ground Water
EWRI/ASCE 35-01 Guidelines for Quality Assurance of Installed Fine-Pore Aeration Equipment
CI/ASCE 36-01 Standard Construction Guidelines for Microtunneling
SEI/ASCE 37-02 Design Loads on Structures during Construction
CI/ASCE 38-02 Standard Guideline for the Collection and Depiction of Existing Subsurface Utility Data
EWRI/ASCE 39-03 Standard Practice for the Design and Operation of Hail Suppression Projects
ASCE/EWRI 40-03 Regulated Riparian Model Water Code
ASCE/SEI 41-06 Seismic Rehabilitation of Existing Buildings
ASCE/EWRI 42-04 Standard Practice for the Design and Operation of Precipitation Enhancement Projects
ASCE/SEI 43-05 Seismic Design Criteria for Structures, Systems, and Components in Nuclear Facilities
ASCE/EWRI 44-05 Standard Practice for the Design and Operation of Supercooled Fog Dispersal Projects
ASCE/EWRI 45-05 Standard Guidelines for the Design of Urban Stormwater Systems
ASCE/EWRI 46-05 Standard Guidelines for the Installation of Urban Stormwater Systems
ASCE/EWRI 47-05 Standard Guidelines for the Operation and Maintenance of Urban Stormwater Systems
ASCE/SEI 48-11 Design of Steel Transmission Pole Structures
ASCE/SEI 49-12 Wind Tunnel Testing for Buildings and Other Structures
ASCE/EWRI 50-08 Standard Guideline for Fitting Saturated Hydraulic Conductivity Using Probability Density Functions
ASCE/EWRI 51-08 Standard Guideline for Calculating the Effective Saturated Hydraulic Conductivity
ASCE/SEI 52-10 Design of Fiberglass-Reinforced Plastic (FRP) Stacks
ASCE/G-I 53-10 Compaction Grouting Consensus Guide
ASCE/EWRI 54-10 Standard Guideline for Geostatistical Estimation and Block-Averaging of Homogeneous and Isotropic Saturated Hydraulic Conductivity
ASCE/SEI 55-10 Tensile Membrane Structures
ANSI/ASCE/EWRI 56-10 Guidelines for the Physical Security of Water Utilities
ANSI/ASCE/EWRI 57-10 Guidelines for the Physical Security of Wastewater/Stormwater Utilities
ASCE/T&DI/ICPI 58-10 Structural Design of Interlocking Concrete Pavement for Municipal Streets and Roadways
ASCE/SEI 59-11 Blast Protection of Buildings
ASCE/EWRI 60-12 Guidelines for Development of Effective Water Sharing Agreement

This page intentionally left blank

FOREWORD

The material presented in this standard has been prepared in accordance with recognized engineering principles. This standard should not be used without first securing competent advice with respect to its suitability for any given application. The publication of the material contained herein is not intended as a representation or warranty on the part of the American Society of Civil Engineers, or of any other person named herein, that this information is suitable for any general or particular use or promises freedom from infringement of any patent or patents. Anyone making use of this information assumes all liability from such use.

Throughout this text, a gray bar appears in the margins to indicate that the adjacent text is commentary, provided for clarification.The commentary is not part of the mandatory standard.

The checklists that appear in Appendix C may be obtained in PDF format from http://dx.doi.org/10.1061/9780784412855. A complete listing of known errata is available at http://www.asce.org/sei/errata.

This page intentionally left blank

ACKNOWLEDGMENTS

The committee wishes to acknowledge the support of the Federal Emergency Management Agency, whose support of the original work that led to this standard and continued support of topic focused studies and administrative efforts have made this standard possible.

This page intentionally left blank

UNIT CONVERSIONS

Measurement	*SI Units*	*Customary Units*
Abbreviations	m = meter (SI base unit of length) cm = centimeter km = kilometer ha = hectare L = liter (SI base unit of volume) mL = milliliters kg = kilogram (SI base unit of mass) g = gram N = Newton (m kg s^2) Pa = Pascals (N/m^2) kPa = kilopascals J = Joule W = watt kW = kilowatt s = second (SI base unit of time) min = minute h = hour day °C = degrees Celsius ppm = parts per million	yd = yard in. = inch mi = mile acre gal = gallon qt = quart lb = pound oz = ounce lbf = pound-force (lb/ft) psi = pounds per square inch atm = atmosphere ft·lbf = feet per pound-force Btu = British therma unit hp= horsepower s = second min = minute h = hour day °F = degrees Fahrenheit ppm = parts per million
Length	1 m = 3.2808 ft = 1.0936 yd 1 cm = 0.3937 in. 1 km = 0.6214 mile	1 ft = 3 yd = 0.3048 m 1 in. = 2.54 cm 1 mile = 0.869 nautical mile = 1.6093 km
Area	1 m^2 = 10.7643 ft^2 1 km^2 = 0.3861 mi^2 1 ha = 2.4710 acre	1 ft^2 = 0.0929 m^2 1 mi^2 = 2.59 km^2 1 acre = 43,560 ft^2 = 0.4047 ha
Volume	1 L = 0.2642 gal 1 ml = 1 cm^3	1 gal = 4 qt = 3.7854 L 1 ft^3 = 7.481 gal = 28.32 L
Mass	1 g = 0.0353 oz 1 kg = 2.2046 lb	1 oz = 28.3495 g 1 lb = 0.4536 kg
Force	1 N = 0.2248 lb/ft	1 lbf = 4.4482 N
Density	1 kg/m^2 = 0.2048 lb/ft^2 1 kg/m^3 = 6.2427 lb/ft^3	1 lb/ft^2 = 4.882 kg/m^2 1 lb/ft^3 = 16.018 kg/m^3
Pressure	1 kPa = 0.145 psi	1 psi = 6.8948 kPa 1 atm = 14.7 psi = 101.35 kPa
Energy and Power	1 J = 1.00 W·s = 0.7376 ft lbf 1 kJ = 0.2778 W·h = 0.948 Btu 1 W = 0.7376 ft lbf/s = 3.4122 Btu/h 1 kW = 1,3410 hp	1 ft lbf = 1.3558 J 1 Btu = 1.0551 kJ 1 ft lbf/s = 1.3558 W 1 hp = 550 ft lb/s = 0.7457 kW
Flow	1 L/s = 15.85 gal/min = 2.119 ft^3/min	1 gal/min = 0.1337 ft^3/min = 0.0631 L/s
Concentration	mg/L = ppm_m (in dilute solutions)	
Temperature	°C = (°F − 32) × 5/9	°F = (°C × 9/5) + 32
Fundamental Constants and Relationships	Acceleration of gravity Density of water (at 4 °C) = Specific weight of water (15 °C) = Weight of water	32.2 ft/s^2 = 9.81 m/s^2 1,000 kg/m^3 = 1 g/cm^3 62.4 lb/ft^3 = 9,810 N/m^3 1 gal = 8.345 lbs = 3.7854 kg

This page intentionally left blank

CONTENTS

STANDARDS . . . iii

FOREWORD . . . v

ACKNOWLEDGMENTS . . . vii

UNIT CONVERSIONS . . . ix

1 GENERAL REQUIREMENTS . . . **1**
1.1 Scope . . . 1
C1.1 Scope . . . 1
1.2 Definitions and Notations . . . 3
1.2.1 Definitions . . . 3
1.2.2 Notations . . . 9
1.3 Evaluation and Retrofit Process . . . 21
C1.3 Evaluation and Retrofit Process . . . 21
1.4 Seismic Evaluation Process . . . 22
C1.4 Seismic Evaluation Process . . . 22
1.4.1 Selection of Performance Objective . . . 22
C1.4.1 Selection of Performance Objective . . . 22
1.4.2 Level of Seismicity . . . 22
1.4.3 As-Built Information . . . 22
C1.4.3 As-Built Information . . . 24
1.4.4 Evaluation Procedures . . . 24
C1.4.4 Evaluation Procedures . . . 24
1.4.5 Evaluation Report . . . 24
C1.4.5 Evaluation Report . . . 24
1.5 Seismic Retrofit Process . . . 24
C1.5 Seismic Retrofit Process . . . 24
1.5.1 Initial Considerations . . . 24
C1.5.1 Initial Considerations . . . 24
1.5.2 Selection of Performance Objective . . . 26
C1.5.2 Selection of Performance Objective . . . 26
1.5.3 Level of Seismicity . . . 26
1.5.4 As-Built Information . . . 26
1.5.5 Retrofit Procedures . . . 26
C1.5.5 Retrofit Procedures . . . 26
1.5.6 Retrofit Strategies . . . 26
C1.5.6 Retrofit Strategies . . . 27
1.5.7 Retrofit Measures . . . 28
1.5.8 Verification of Retrofit Design . . . 28
C1.5.8 Verification of Retrofit Design . . . 28
1.5.9 Construction Documents . . . 28
C1.5.9 Construction Documents . . . 28
1.5.10 Construction Quality Assurance . . . 28
C1.5.10 Construction Quality Assurance . . . 28

2 PERFORMANCE OBJECTIVES AND SEISMIC HAZARDS . . . **31**
2.1 Scope . . . 31
2.2 Performance Objectives . . . 31
C2.2 Performance Objectives . . . 31
2.2.1 Basic Performance Objective for Existing Buildings (BPOE) . . . 31
C2.2.1 Basic Performance Objective for Existing Buildings (BPOE) . . . 31
2.2.2 Enhanced Performance Objectives . . . 34
C2.2.2 Enhanced Performance Objectives . . . 34
2.2.3 Limited Performance Objectives . . . 34

C2.2.3 Limited Performance Objectives . . . 34
2.2.4 Basic Performance Objective Equivalent to New Building Standards (BPON) . . . 34
C2.2.4 Basic Performance Objective Equivalent to New Building Standards (BPON) . . . 34
2.2.5 System-Specific Performance Procedures . . . 35
C2.2.5 System-Specific Performance Procedures . . . 35
2.3 Target Building Performance Levels . . . 35
C2.3 Target Building Performance Levels . . . 36
2.3.1 Structural Performance Levels and Ranges . . . 36
C2.3.1 Structural Performance Levels and Ranges . . . 36
2.3.2 Nonstructural Performance Levels . . . 39
C2.3.2 Nonstructural Performance Levels . . . 39
2.3.3 Designation of Target Building Performance Levels . . . 43
C2.3.3 Designation of Target Building Performance Levels . . . 43
2.4 Seismic Hazard . . . 44
2.4.1 General Procedure for Hazard Caused by Ground Shaking . . . 44
C2.4.1 General Procedure for Hazard Caused by Ground Shaking . . . 45
2.4.2 Site-Specific Procedure for Hazards Caused by Ground Shaking . . . 48
2.5 Level of Seismicity . . . 49
C2.5 Level of Seismicity . . . 49

3 EVALUATION AND RETROFIT REQUIREMENTS . . . 51
3.1 Scope . . . 51
3.2 As-Built Information . . . 51
C3.2 As-Built Information . . . 51
3.2.1 Building Type . . . 51
C3.2.1 Building Type . . . 51
3.2.2 Building Configuration . . . 54
C3.2.2 Building Configuration . . . 54
3.2.3 Component Properties . . . 54
C3.2.3 Component Properties . . . 54
3.2.4 Site and Foundation Information . . . 54
C3.2.4 Site and Foundation Information . . . 55
3.2.5 Adjacent Buildings . . . 55
3.3 Evaluation and Retrofit Procedures . . . 55
3.3.1 Limitations on the Use of the Tier 1 and 2 Evaluation and Retrofit Procedures . . . 55
C3.3.1 Limitations on the Use of the Tier 1 and 2 Evaluation and Retrofit Procedures . . . 55
3.3.2 Tier 1 Screening Procedure . . . 58
C3.3.2 Tier 1 Screening Procedure . . . 58
3.3.3 Tier 2 Deficiency-Based Evaluation and Retrofit Procedures . . . 58
C3.3.3 Tier 2 Deficiency-Based Evaluation and Retrofit Procedures . . . 58
3.3.4 Tier 3 Systematic Evaluation and Retrofit Procedures . . . 59

4 TIER 1 SCREENING . . . 61
4.1 Scope . . . 61
C4.1 Scope . . . 61
4.1.1 Performance Level . . . 61
4.1.2 Seismic Hazard Level . . . 61
4.1.3 Level of Seismicity . . . 61
4.2 Scope of Investigation Required . . . 61
4.2.1 On-Site Investigation and Condition Assessment . . . 61
4.2.2 Building Type . . . 61
C4.2.2 Building Type . . . 61
4.2.3 Default Material Values . . . 61
C4.2.3 Default Material Properties . . . 63
4.3 Benchmark Buildings . . . 64
C4.3 Benchmark Buildings . . . 64
4.4 Selection and Use of Checklists . . . 66
C4.4 Selection and Use of Checklists . . . 67
4.5 Tier 1 Analysis . . . 67
4.5.1 Overview . . . 67
4.5.2 Seismic forces . . . 67
4.5.3 Quick Checks for Strength and Stiffness . . . 69

5 TIER 2 DEFICIENCY-BASED EVALUATION AND RETROFIT . . . 73
5.1 Scope . . . 73
C5.1 Scope . . . 73
5.2 General Requirements . . . 73
C5.2 General Requirements . . . 73
5.2.1 Performance Level and Seismic Hazard Level . . . 73
C5.2.1 Performance Level and Seismic Hazard Level . . . 73
5.2.2 As-Built Information . . . 73
C5.2.2 As-Built Information . . . 76
5.2.3 Condition Assessment . . . 76
C5.2.3 Condition Assessment . . . 76
5.2.4 Tier 2 Analysis Methods . . . 76
C5.2.4 Tier 2 Analysis Methods . . . 76
5.2.5 Tier 2 Acceptance Criteria . . . 76
C5.2.5 Tier 2 Acceptance Criteria . . . 76
5.2.6 Knowledge Factor . . . 76
C5.2.6 Knowledge Factor . . . 76
5.3 Tier 2 Deficiency-Based Evaluation Requirements . . . 76
C5.3 Tier 2 Deficiency-Based Evaluation Requirements . . . 77
5.4 Procedures for Basic Configuration of Building Systems . . . 77
5.4.1 General . . . 77
5.4.2 Building Configuration . . . 77
5.4.3 Geologic Site Hazards and Foundation Components . . . 78
5.5 Procedures for Seismic-force-Resisting Systems . . . 78
5.5.1 General . . . 78
5.5.2 Procedures for Moment Frames . . . 78
5.5.3 Procedures for Shear Walls . . . 80
5.5.4 Procedures for Braced Frames . . . 81
5.6 Procedures for Diaphragms . . . 82
5.6.1 General Procedures for Diaphragms . . . 82
5.6.2 Procedures for Wood Diaphragms . . . 82
5.6.3 Procedures for Metal Deck Diaphragms . . . 82
5.6.4 Procedures for Precast Concrete Diaphragms . . . 82
5.6.5 Diaphragms Other than Wood, Metal Deck, Concrete, or Horizontal Bracing . . . 82
5.7 Procedures for Connections . . . 82
5.7.1 Anchorage for Normal forces . . . 82
5.7.2 Connections for Shear Transfer . . . 82
5.7.3 Connections for Vertical Elements . . . 82
5.7.4 Interconnection of Elements . . . 83
5.7.5 Roof and Wall Panel Connections . . . 83
5.8 Tier 2 Deficiency-Based Retrofit Requirements . . . 83
C5.8 Tier 2 Deficiency-Based Retrofit Requirements . . . 83

6 TIER 3 SYSTEMATIC EVALUATION AND RETROFIT . . . 89
6.1 Scope . . . 89
C6.1 Scope . . . 89
6.2 Data Collection Requirements . . . 89
C6.2 Data Collection Requirements . . . 89
6.2.1 Minimum Data Collection Requirements . . . 89
6.2.2 Usual Data Collection Requirements . . . 89
6.2.3 Comprehensive Data Collection Requirements . . . 90
C6.2.3 Comprehensive Data Collection Requirements . . . 90
6.2.4 Knowledge Factor . . . 90
6.3 Tier 3 Evaluation Requirements . . . 91
C6.3 Tier 3 Evaluation Requirements . . . 91
6.4 Tier 3 Retrofit Requirements . . . 91
C6.4 Tier 3 Retrofit Requirements . . . 91

7 ANALYSIS PROCEDURES AND ACCEPTANCE CRITERIA . . . 93
7.1 Scope . . . 93
C7.1 Scope . . . 93

7.2 General Analysis Requirements . . . 93
7.2.1 Analysis Procedures . . . 93
7.2.2 Component Gravity Loads and Load Combinations . . . 93
C7.2.2 Component Gravity Loads and Load Combinations . . . 94
7.2.3 Mathematical Modeling . . . 94
7.2.4 Configuration . . . 96
C7.2.4 Configuration . . . 96
7.2.5 Multidirectional Seismic Effects . . . 96
7.2.6 P-Δ Effects . . . 98
C7.2.6 P-Δ Effects . . . 98
7.2.7 Soil–Structure Interaction . . . 98
C7.2.7 Soil–Structure Interaction . . . 98
7.2.8 Overturning . . . 99
C7.2.8 Overturning . . . 99
7.2.9 Diaphragms, Chords, Collectors, and Ties . . . 99
C7.2.9 Diaphragms, Chords, Collectors, and Ties . . . 100
7.2.10 Continuity . . . 101
C.7.2.10 Continuity . . . 101
7.2.11 Structural Walls and Their Anchorage . . . 101
7.2.12 Structures Sharing Common Elements . . . 102
7.2.13 Building Separation . . . 102
7.2.14 Verification of Analysis Assumptions . . . 102
C7.2.14 Verification of Analysis Assumptions . . . 102
7.3 Analysis Procedure Selection . . . 103
C7.3 Analysis Procedure Selection . . . 103
7.3.1 Linear Procedures . . . 103
C7.3.1 Linear Procedures . . . 103
7.3.2 Nonlinear Procedures . . . 104
7.3.3 Alternative Rational Analysis . . . 105
7.4 Analysis Procedures . . . 105
7.4.1 Linear Static Procedure (LSP) . . . 105
7.4.2 Linear Dynamic Procedure (LDP) . . . 109
7.4.3 Nonlinear Static Procedure NSP . . . 109
7.4.4 Nonlinear Dynamic Procedure (NDP) . . . 113
7.5 Acceptance Criteria . . . 114
7.5.1 General Requirements . . . 114
C7.5.1 General Requirements . . . 114
7.5.2 Linear Procedures . . . 118
7.5.3 Nonlinear Procedures . . . 119
7.6 Alternative Modeling Parameters and Acceptance Criteria . . . 119
C7.6 Alternative Modeling Parameters and Acceptance Criteria . . . 119
7.6.1 Experimental Setup . . . 120
C7.6.1 Experimental Setup . . . 120
7.6.2 Data Reduction and Reporting . . . 120
C.7.6.2 Data Reduction and Reporting . . . 121
7.6.3 Analysis Parameters and Acceptance Criteria for Subassemblies Based on Experimental Data . . . 121
C7.6.3 Analysis Parameters and Acceptance Criteria for Subassemblies Based on Experimental Data . . . 122

8 FOUNDATIONS AND GEOLOGIC SITE HAZARDS . . . 123
8.1 Scope . . . 123
C8.1 Scope . . . 123
8.2 Site Characterization . . . 123
C8.2 Site Characterization . . . 123
8.2.1 Foundation Information . . . 123
8.2.2 Seismic–Geologic Site Hazards . . . 124
C8.2.2 Seismic–Geologic Site Hazards . . . 124
8.3 Mitigation of Seismic–Geologic Site Hazards . . . 128
C8.3 Mitigation of Seismic–Geologic Site Hazards . . . 128
8.4 Foundation Strength and Stiffness . . . 129
C8.4 Foundation Strength and Stiffness . . . 129
8.4.1 Expected Foundation Capacities . . . 130
C8.4.1 Expected Foundation Capacities . . . 130

8.4.2 Load-Deformation Characteristics for Shallow Foundations . . . 130
C8.4.2 Load-Deformation Characteristics for Shallow Foundations . . . 130
8.4.3 Pile Foundations . . . 139
8.4.4 Drilled Shafts . . . 140
C8.4.4 Drilled Shafts . . . 140
8.4.5 Deep Foundation Acceptance Criteria . . . 140
8.5 Kinematic Interaction and Radiation Damping Soil–Structure Interaction Effects . . . 141
C8.5 Kinematic Interaction and Radiation Damping Soil–Structure Interaction Effects . . . 141
8.5.1 Kinematic Interaction . . . 141
8.5.2 Foundation Damping Soil–Structure Interaction Effects . . . 142
C8.5.2 Foundation Damping Soil–Structure Interaction Effects . . . 143
8.6 Seismic Earth Pressure . . . 143
C8.6 Seismic Earth Pressure . . . 143
8.7 Foundation Retrofit . . . 143
C8.7 Foundation Retrofit . . . 144

9 STEEL . . . 145
9.1 Scope . . . 145
C9.1 Scope . . . 145
9.2 Material Properties and Condition Assessment . . . 145
9.2.1 General . . . 145
C9.2.1 General . . . 145
9.2.2 Properties of In-Place Materials and Components . . . 145
9.2.3 Condition Assessment . . . 148
9.2.4 Knowledge Factor . . . 149
9.3 General Assumptions and Requirements . . . 149
9.3.1 Stiffness . . . 149
9.3.2 Strength and Acceptance Criteria . . . 149
9.3.3 Retrofit Measures . . . 150
9.4 Steel Moment Frames . . . 150
9.4.1 General . . . 150
C9.4.1 General . . . 150
9.4.2 Fully Restrained (FR) Moment Frames . . . 150
9.4.3 Partially Restrained (PR) Moment Frames . . . 161
9.5 Steel Braced Frames . . . 164
9.5.1 General . . . 164
C9.5.1 General . . . 165
9.5.2 Concentrically Braced Frames . . . 165
9.5.3 Eccentrically Braced Frames . . . 167
9.5.4 Buckling-Restrained Braced Frames . . . 168
9.6 Steel Plate Shear Walls . . . 170
9.6.1 General . . . 170
C9.6.1 General . . . 170
9.6.2 Stiffness of Steel Plate Shear Walls . . . 170
9.6.3 Strength of Steel Plate Shear Walls . . . 170
9.6.4 Acceptance Criteria for Steel Plate Shear Walls . . . 170
9.6.5 Retrofit Measures for Steel Plate Shear Walls . . . 171
C9.6.5 Retrofit Measures for Steel Plate Shear Walls . . . 171
9.7 Steel Frames with Infills . . . 171
C9.7 Steel Frames with Infills . . . 171
9.8 Diaphragms . . . 171
9.8.1 Bare Metal Deck Diaphragms . . . 171
9.8.2 Metal Deck Diaphragms with Structural Concrete Topping . . . 172
9.8.3 Metal Deck Diaphragms with Nonstructural Topping . . . 173
9.8.4 Horizontal Steel Bracing (Steel Truss Diaphragms) . . . 174
9.8.5 Archaic Diaphragms . . . 175
9.8.6 Chord and Collector Elements . . . 175
9.9 Steel Pile Foundations . . . 176
9.9.1 General . . . 176
C9.9.1 General . . . 176
9.9.2 Stiffness of Steel Pile Foundations . . . 176
9.9.3 Strength of Steel Pile Foundations . . . 176
9.9.4 Acceptance Criteria for Steel Pile Foundations . . . 176
C9.9.4 Acceptance Criteria for Steel Pile Foundations . . . 176

9.9.5 Retrofit Measures for Steel Pile Foundations . . . 176
C9.9.5 Retrofit Measures for Steel Pile Foundations . . . 176
9.10 Cast and Wrought Iron . . . 176
9.10.1 General . . . 176
9.10.2 Stiffness of Cast and Wrought Iron . . . 176
9.10.3 Strength and Acceptance Criteria for Cast and Wrought Iron . . . 176

10 CONCRETE . . . 179
10.1 Scope . . . 179
C10.1 Scope . . . 179
10.2 Material Properties and Condition Assessment . . . 179
10.2.1 General . . . 179
C10.2.1 General . . . 179
10.2.2 Properties of In-Place Materials and Components . . . 180
10.2.3 Condition Assessment . . . 184
10.2.4 Knowledge Factor . . . 185
10.3 General Assumptions and Requirements . . . 185
10.3.1 Modeling and Design . . . 185
10.3.2 Strength and Deformability . . . 187
10.3.3 Flexure and Axial Loads . . . 188
C10.3.3 Flexure and Axial Loads . . . 188
10.3.4 Shear and Torsion . . . 189
C10.3.4 Shear and Torsion . . . 189
10.3.5 Development and Splices of Reinforcement . . . 189
C10.3.5 Development and Splices of Reinforcement . . . 190
10.3.6 Connections to Existing Concrete . . . 190
C10.3.6 Connections to Existing Concrete . . . 190
10.3.7 Retrofit Measures . . . 191
10.4 Concrete Moment Frames . . . 191
10.4.1 Types of Concrete Moment Frames . . . 191
10.4.2 Reinforced Concrete Beam–Column Moment Frames . . . 191
10.4.3 Posttensioned Concrete Beam–Column Moment Frames . . . 199
10.4.4 Slab–Column Moment Frames . . . 201
10.5 Precast Concrete Frames . . . 205
10.5.1 Types of Precast Concrete Frames . . . 205
10.5.2 Precast Concrete Frames Expected to Resist Seismic forces . . . 205
10.5.3 Precast Concrete Frames Not Expected to Resist Seismic forces Directly . . . 205
10.6 Concrete Frames with Infills . . . 206
10.6.1 Types of Concrete Frames with Infills . . . 206
10.6.2 Concrete Frames with Masonry Infills . . . 206
10.6.3 Concrete Frames with Concrete Infills . . . 208
10.7 Concrete Shear Walls . . . 209
10.7.1 Types of Concrete Shear Walls and Associated Components . . . 209
C10.7.1 Types of Concrete Shear Walls and Associated Components . . . 209
10.7.2 Reinforced Concrete Shear Walls, Wall Segments, and Coupling Beams . . . 211
10.8 Precast Concrete Shear Walls . . . 217
10.8.1 Types of Precast Shear Walls . . . 217
10.8.2 Precast Concrete Shear Walls and Wall Segments . . . 217
10.9 Concrete Braced Frames . . . 219
10.9.1 Types of Concrete Braced Frames . . . 219
10.9.2 General . . . 219
10.9.3 Stiffness of Concrete Braced Frames . . . 219
10.9.4 Strength of Concrete Braced Frames . . . 220
10.9.5 Acceptance Criteria for Concrete Braced Frames . . . 220
10.9.6 Retrofit Measures for Concrete Braced Frames . . . 220
C10.9.6 Retrofit Measures for Concrete Braced Frames . . . 220
10.10 Cast-in-Place Concrete Diaphragms . . . 220
10.10.1 Components of Cast-in-Place Concrete Diaphragms . . . 220
10.10.2 Analysis, Modeling, and Acceptance Criteria for Cast-in-Place Concrete Diaphragms . . . 220
10.10.3 Retrofit Measures for Cast-in-Place Concrete Diaphragms . . . 221
C10.10.3 Retrofit Measures for Cast-in-Place Concrete Diaphragms . . . 221
10.11 Precast Concrete Diaphragms . . . 221

10.11.1 Components of Precast Concrete Diaphragms . . . 221
C10.11.1 Components of Precast Concrete Diaphragms . . . 221
10.11.2 Analysis, Modeling, and Acceptance Criteria for Precast Concrete Diaphragms . . . 221
C10.11.2 Analysis, Modeling, and Acceptance Criteria for Precast Concrete Diaphragms . . . 221
10.11.3 Retrofit Measures for Precast Concrete Diaphragms . . . 221
C10.11.3 Retrofit Measures for Precast Concrete Diaphragms . . . 221
10.12 Concrete Foundations . . . 221
10.12.1 Types of Concrete Foundations . . . 221
10.12.2 Analysis of Existing Concrete Foundations . . . 222
C10.12.2 Analysis of Existing Concrete Foundations . . . 222
10.12.3 Evaluation of Existing Condition . . . 222
10.12.4 Retrofit Measures for Concrete Foundations . . . 222
C10.12.4 Retrofit Measures for Concrete Foundations . . . 222

11 MASONRY . . . 225
11.1 Scope . . . 225
C11.1 Scope . . . 225
11.2 Condition Assessment and Material Properties . . . 225
11.2.1 General . . . 225
C11.2.1 General . . . 226
11.2.2 Condition Assessment . . . 226
C11.2.2 Condition Assessment . . . 226
11.2.3 Properties of In-Place Materials and Components . . . 229
11.2.4 Knowledge Factor . . . 232
11.3 Masonry Walls . . . 232
C11.3 Masonry Walls . . . 232
11.3.1 Types of Masonry Walls . . . 233
C11.3.1 Types of Masonry Walls . . . 233
11.3.2 Unreinforced Masonry (URM) Walls and Wall Piers Subject to In-Plane Actions . . . 234
11.3.3 Unreinforced Masonry Walls Subject to Out-of-Plane Actions . . . 241
11.3.4 Reinforced Masonry Walls and Wall Piers In-Plane . . . 242
11.3.5 Reinforced Masonry Wall Out-of-Plane Actions . . . 243
11.4 Masonry Infills . . . 244
C11.4 Masonry Infills . . . 244
11.4.1 Types of Masonry Infills . . . 244
11.4.2 Masonry Infill In-Plane Actions . . . 244
C11.4.2 Masonry Infill In-Plane Actions . . . 244
11.4.3 Masonry Infill Wall Out-of-Plane Actions . . . 247
11.5 Anchorage to Masonry Walls . . . 248
11.5.1 Types of Anchors . . . 248
11.5.2 Analysis of Anchors . . . 248
C11.5.2 Analysis of Anchors . . . 248
11.5.3 Quality Assurance for Anchors in Masonry Walls . . . 248
C11.5.3 Quality Assurance for Anchors in Masonry Walls . . . 249
11.6 Masonry Foundation Elements . . . 249
11.6.1 Types of Masonry Foundations . . . 249
C11.6.1 Types of Masonry Foundations . . . 249
11.6.2 Analysis of Existing Foundations . . . 249
11.6.3 Foundation Retrofit Measures . . . 249
C11.6.3 Foundation Retrofit Measures . . . 250

12 WOOD AND COLD-FORMED STEEL LIGHT FRAME . . . 251
12.1 Scope . . . 251
C12.1 Scope . . . 251
12.2 Material Properties and Condition Assessment . . . 251
12.2.1 General . . . 251
C12.2.1 General . . . 251
12.2.2 Properties of In-Place Materials and Components . . . 252
12.2.3 Condition Assessment . . . 255
12.2.4 Knowledge Factor . . . 257
12.3 General Assumptions and Requirements . . . 257
12.3.1 Stiffness . . . 257

12.3.2 Strength and Acceptance Criteria . . . 257
12.3.3 Connection Requirements . . . 258
C12.3.3 Connection Requirements . . . 258
12.3.4 Components Supporting Discontinuous Shear Walls . . . 258
12.3.5 Retrofit Measures . . . 258
C12.3.5 Retrofit Measures . . . 258
12.4 Wood and CFS Light-Frame Shear Walls . . . 259
12.4.1 General . . . 259
C12.4.1 General . . . 259
12.4.2 Types of Wood Frame Shear Walls . . . 260
12.4.3 Types of CFS Light-Frame Shear Walls . . . 262
12.4.4 Stiffness, Strength, Acceptance Criteria, and Connection Design for Wood Frame Shear Walls . . . 262
12.4.5 Stiffness, Strength, Acceptance Criteria, and Connection Design for CFS Light-Frame Shear Walls . . . 269
12.5 Wood Diaphragms . . . 270
12.5.1 General . . . 270
C12.5.1 General . . . 270
12.5.2 Types of Wood Diaphragms . . . 270
12.5.3 Stiffness, Strength, Acceptance Criteria, and Connection Design for Wood Diaphragms . . . 272
12.6 Wood Foundations . . . 275
12.6.1 Types of Wood Foundations . . . 275
C12.6.1 Types of Wood Foundations . . . 275
12.6.2 Analysis, Strength, and Acceptance Criteria for Wood Foundations . . . 275
C12.6.2 Analysis, Strength, and Acceptance Criteria for Wood Foundations . . . 276
12.6.3 Retrofit Measures for Wood Foundations . . . 276
C12.6.3 Retrofit Measures for Wood Foundations . . . 276
12.7 Other Wood Elements and Components . . . 276
12.7.1 General . . . 276
C12.7.1 General . . . 276

13 ARCHITECTURAL, MECHANICAL, AND ELECTRICAL COMPONENTS . . . 277
13.1 Scope . . . 277
C13.1 Scope . . . 277
13.2 Evaluation and Retrofit Procedure for Nonstructural Components . . . 277
C13.2 Evaluation and Retrofit Procedure for Nonstructural Components . . . 279
13.2.1 Data Collection and Condition Assessment . . . 279
C13.2.1 Data Collection and Condition Assessment . . . 280
13.2.2 Classification of Acceleration-Sensitive and Deformation-Sensitive Components . . . 280
C13.2.2 Classification of Acceleration-Sensitive and Deformation-Sensitive Components . . . 280
13.3 Component Evaluation . . . 280
C13.3 Component Evaluation . . . 281
13.4 Evaluation and Retrofit Procedures . . . 281
13.4.1 Analytical Procedure . . . 281
C13.4.1 Analytical Procedure . . . 281
13.4.2 Prescriptive Procedure . . . 281
C13.4.2 Prescriptive Procedure . . . 281
13.4.3 force Analysis: General Equations . . . 281
13.4.4 Deformation Analysis . . . 284
13.4.5 Component Testing . . . 284
13.5 Retrofit Approaches . . . 284
C13.5 Retrofit Approaches . . . 284
13.6 Architectural Components: Definition, Behavior, and Acceptance Criteria . . . 285
13.6.1 Exterior Wall Components . . . 285
13.6.2 Partitions . . . 289
13.6.3 Interior Veneers . . . 290
13.6.4 Ceilings . . . 290
13.6.5 Parapets and Cornices . . . 291
13.6.6 Architectural Appendages and Marquees . . . 291
13.6.7 Chimneys and Stacks . . . 292
13.6.8 Stairs and Stair Enclosures . . . 292
13.6.9 Doors Required for Emergency Services Egress in Essential Facilities . . . 292
13.7 Mechanical, Electrical, and Plumbing Components: Definition, Behavior, and Acceptance Criteria . . . 293

13.7.1 Mechanical Equipment . . . 293
13.7.2 Storage Vessels and Water Heaters . . . 294
13.7.3 Pressure Piping . . . 295
13.7.4 Fire Suppression Piping . . . 295
13.7.5 Fluid Piping Other than Fire Suppression . . . 296
13.7.6 Ductwork . . . 297
13.7.7 Electrical and Communications Equipment . . . 297
13.7.8 Electrical and Communications Distribution Components . . . 298
13.7.9 Light Fixtures . . . 299
13.8 Furnishings and Interior Equipment: Definition, Behavior, and Acceptance Criteria . . . 299
13.8.1 Storage Racks . . . 299
13.8.2 Contents . . . 300
13.8.3 Computer Access Floors . . . 300
13.8.4 Hazardous Materials Storage . . . 300
13.8.5 Computer and Communication Racks . . . 301
13.8.6 Elevators . . . 301
13.8.7 Conveyors . . . 302

14 SEISMIC ISOLATION AND ENERGY DISSIPATION . . . 303
14.1 Scope . . . 303
C14.1 Scope . . . 303
14.2 Seismic Isolation Systems . . . 304
14.2.1 General Requirements . . . 304
C14.2.1 General Requirements . . . 304
14.2.2 Mechanical Properties and Modeling of Seismic Isolation Systems . . . 304
C14.2.2 Mechanical Properties and Modeling of Seismic Isolation Systems . . . 304
14.2.3 General Criteria for Seismic Isolation Design . . . 311
14.2.4 Linear Procedures . . . 313
14.2.5 Nonlinear Procedures . . . 315
14.2.6 Nonstructural Components . . . 316
14.2.7 Detailed System Requirements . . . 316
14.2.8 Isolation System Testing and Design Properties . . . 318
14.3 Passive Energy Dissipation Systems . . . 320
14.3.1 General Requirements . . . 320
C14.3.1 General Requirements . . . 321
14.3.2 Implementation of Energy Dissipation Devices . . . 321
14.3.3 Modeling of Energy Dissipation Devices . . . 322
C14.3.3 Modeling of Energy Dissipation Devices . . . 322
14.3.4 Linear Analysis Procedures . . . 323
C14.3.4 Linear Analysis Procedures . . . 323
14.3.5 Nonlinear Analysis Procedures . . . 325
14.3.6 Detailed Systems Requirements . . . 327
14.3.7 Design Review . . . 327
C14.3.7 Design Review . . . 327
14.3.8 Required Tests of Energy Dissipation Devices . . . 327
14.4 Other Response Control Systems . . . 329
C14.4 Other Response Control Systems . . . 329

15 SYSTEM-SPECIFIC PERFORMANCE PROCEDURES . . . 331
15.1 Scope . . . 331
C15.1 Scope . . . 331
15.2 Special Procedure for Unreinforced Masonry . . . 332
15.2.1 Scope . . . 332
C15.2.1 Scope . . . 332
15.2.2 General Requirements . . . 332
15.2.3 Analysis . . . 334

16 TIER 1 CHECKLISTS . . . 339
16.1 Basic Checklists . . . 339
16.1.1 Very Low Seismicity Checklist . . . 339
C16.1.1 Very Low Seismicity Checklist . . . 339

16.1.2LS Life Safety Basic Configuration Checklist . . . 339
C16.1.2LS Life Safety Basic Configuration Checklist . . . 339
16.1.2IO Immediate Occupancy Basic Configuration Checklist . . . 340
C16.1.2IO Immediate Occupancy Basic Configuration Checklist . . . 340
16.2LS Life Safety Structural Checklist for Building Types W1: Wood Light Frames and W1a: Multi-Story, Multi-Unit Residential Wood Frame . . . 341
C16.2LS Life Safety Structural Checklist for Building Types W1: Wood Light Frames and W1a: Multi-Story, Multi-Unit Residential Wood Frame . . . 341
16.2IO Immediate Occupancy Structural Checklist for Building Types W1: Wood Light Frames and W1a: Multi-Story, Multi-Unit Residential Wood Frame . . . 342
C16.2IO Immediate Occupancy Structural Checklist for Building Types W1: Wood Light Frames and W1a: Multi-Story, Multi-Unit Residential Wood Frame . . . 342
16.3LS Life Safety Structural Checklist for Building Type W2: Wood Frames, Commercial and Industrial . . . 343
C16.3 Life Safety Structural Checklist for Building Type W2: Wood Frames, Commercial and Industrial . . . 343
16.3IO Immediate Occupancy Structural Checklist for Building Type W2: Wood Frames, Commercial and Industrial . . . 344
C16.3IO Immediate Occupancy Structural Checklist for Building Type W2: Wood Frames, Commercial and Industrial . . . 344
16.4LS Life Safety Structural Checklist for Building Types S1: Steel Moment Frames with Stiff Diaphragms and S1a: Steel Moment Frames with Flexible Diaphragms . . . 345
C16.4LS Life Safety Structural Checklist for Building Type S1: Steel Moment Frames with Stiff Diaphragms and Type S1a: Steel Moment Frames with Flexible Diaphragms . . . 345
16.4IO Immediate Occupancy Structural Checklist for Building Types S1: Steel Moment Frames with Stiff Diaphragms and S1a: Steel Moment Frames with Flexible Diaphragms . . . 346
C16.4IO Immediate Occupancy Structural Checklist for Building Type S1: Steel Moment Frames with Stiff Diaphragms and Type S1a: Steel Moment Frames with Flexible Diaphragms . . . 347
16.5LS Life Safety Structural Checklist for Building Types S2: Steel Braced Frames with Stiff Diaphragms and S2a: Steel Braced Frames with Flexible Diaphragms . . . 348
C16.5LS Life Safety Structural Checklist for Building Types S2: Steel Braced Frames with Stiff Diaphragms and S2a: Steel Braced Frames with Flexible Diaphragms . . . 348
16.5IO Immediate Occupancy Structural Checklist for Building Types S2: Steel Braced Frames and S2a: Steel Braced Frames with Flexible Diaphragms . . . 349
C16.5IO Immediate Occupancy Structural Checklist for Building Types S2: Steel Braced Frames with Stiff Diaphragms and S2a: Steel Braced Frames with Flexible Diaphragms . . . 349
16.6LS Life Safety Structural Checklist for Building Type S3: Steel Light Frames . . . 350
C16.6LS Life Safety Structural Checklist for Building Type S3: Steel Light Frames . . . 351
16.6IO Immediate Occupancy Structural Checklist for Building Type S3: Steel Light Frames. . . . 351
C16.6IO Immediate Occupancy Structural Checklist for Building Type S3: Steel Light Frames. . . . 351
16.7LS Life Safety Structural Checklist for Building Type S4: Dual Systems with Backup Steel Moment Frames and Stiff Diaphragms . . . 352
C16.7LS Life Safety Structural Checklist for Building Type S4: Dual Systems with Backup Steel Moment Frames and Stiff Diaphragms . . . 352
16.7IO Immediate Occupancy Structural Checklist for Building Type S4: Dual Systems with Backup Steel Moment Frames and Stiff Diaphragms . . . 353
C16.7IO Immediate Occupancy Structural Checklist for Building Type S4: Dual Systems with Backup Steel Moment Frames and Stiff Diaphragms . . . 353
16.8LS Life Safety Structural Checklist for Building Types S5: Steel Frames with Infill Masonry Shear Walls and Stiff Diaphragms and S5a: Steel Frames with Infill Masonry Shear Walls and Flexible Diaphragms . . . 355
C16.8LS Life Safety Structural Checklist for Building Types S5: Steel Frames with Infill Masonry Shear Walls and Stiff Diaphragms and S5a: Steel Frames with Infill Masonry Shear Walls and Flexible Diaphragms . . . 355
16.8IO Immediate Occupancy Structural Checklist for Building Types S5: Steel Frames with Infill Masonry Shear Walls and Stiff Diaphragms and S5a: Steel Frames with Infill Masonry Shear Walls and Flexible Diaphragms . . . 356
C16.8IO Immediate Occupancy Structural Checklist for Building Types S5: Steel Frames with Infill Masonry Shear Walls and Stiff Diaphragms and S5a: Steel Frames with Infill Masonry Shear Walls and Flexible Diaphragms . . . 356
16.9LS Life Safety Structural Checklist for Building Type C1: Concrete Moment Frames . . . 357

C16.9LS Life Safety Structural Checklist for Building Type C1: Concrete Moment Frames 358
16.9IO Immediate Occupancy Structural Checklist for Building Type C1: Concrete Moment Frames 358
C16.9IO Immediate Occupancy Structural Checklist for Building Type C1: Concrete Moment Frames 359
16.10LS Life Safety Structural Checklist for Building Types C2: Concrete Shear Walls with Stiff Diaphragms and C2a: Concrete Shear Walls with Flexible Diaphragms 360
C16.10LS Life Safety Structural Checklist for Building Types C2: Concrete Shear Walls with Stiff Diaphragms and C2a: Concrete Shear Walls with Flexible Diaphragms 360
16.10IO Immediate Occupancy Structural Checklist for Building Types C2: Concrete Shear Walls with Stiff Diaphragms and C2a: Concrete Shear Walls with Flexible Diaphragms 361
C16.10IO Immediate Occupancy Structural Checklist for Building Types C2: Concrete Shear Walls with Stiff Diaphragms and C2a: Concrete Shear Walls with Flexible Diaphragms 361
16.11LS Life Safety Structural Checklist for Building Types C3: Concrete Frames with Infill Masonry Shear Walls and C3a: Concrete Frames with Infill Masonry Shear Walls and Flexible Diaphragms 362
C16.11LS Life Safety Structural Checklist for Building Types C3: Concrete Frames with Infill Masonry Shear Walls and C3a: Concrete Frames with Infill Masonry Shear Walls and Flexible Diaphragms 362
16.11IO Immediate Occupancy Structural Checklist for Building Types C3: Concrete Frames with Infill Masonry Shear Walls and Stiff Diaphragms and C3a: Concrete Frames with Infill Masonry Shear Walls and Flexible Diaphragms 363
C16.11IO Immediate Occupancy Structural Checklist for Building Types C3: Concrete Frames with Infill Masonry Shear Walls and C3a: Concrete Frames with Infill Masonry Shear Walls and Flexible Diaphragms 363
16.12LS Life Safety Structural Checklist for Building Types PC1: Precast or Tilt-Up Concrete Shear Walls with Flexible Diaphragms and PC1a: Precast or Tilt-Up Concrete Shear Walls with Stiff Diaphragms 365
C16.12LS Life Safety Structural Checklist for Building Types PC1: Precast or Tilt-Up Concrete Shear Walls with Flexible Diaphragms and PC1a: Precast or Tilt-Up Concrete Shear Walls with Stiff Diaphragms 365
16.12IO Immediate Occupancy Structural Checklist for Building Types PC1: Precast or Tilt-Up Concrete Shear Walls with Flexible Diaphragms and PC1a: Precast or Tilt-Up Concrete Shear Walls with Stiff Diaphragms 366
C16.12IO Immediate Occupancy Structural Checklist for Building Types PC1: Precast or Tilt-Up Concrete Shear Walls with Flexible Diaphragms and PC1a: Precast or Tilt-Up Concrete Shear Walls with Stiff Diaphragms 366
16.13LS Life Safety Structural Checklist for Building Type PC2: Precast Concrete Frames with Shear Walls 367
C16.13LS Life Safety Structural Checklist for Building Type PC2: Precast Concrete Frames with Shear Walls 367
16.13IO Immediate Occupancy Structural Checklist for Building Type PC2: Precast Concrete Frames with Shear Walls 368
C16.13IO Immediate Occupancy Structural Checklist for Building Type PC2: Precast Concrete Frames with Shear Walls 368
16.14LS Life Safety Structural Checklist for Building Type PC2a: Precast Concrete Frames without Shear Walls 369
C16.14LS Life Safety Structural Checklist for Building Type PC2a: Precast Concrete Frames without Shear Walls 369
16.14IO Immediate Occupancy Structural Checklist for Building Type PC2a: Precast Concrete Frames without Shear Walls 370
C16.14IO Immediate Occupancy Structural Checklist for Building Type PC2a: Precast Concrete Frames without Shear Walls 370
16.15LS Life Safety Structural Checklist for Building Types RM1: Reinforced Masonry Bearing Walls with Flexible Diaphragms and RM2: Reinforced Masonry Bearing Walls with Stiff Diaphragms 371
C16.15LS Life Safety Structural Checklist for Building Types RM1: Reinforced Masonry Bearing Walls with Flexible Diaphragms and RM2: Reinforced Masonry Bearing Walls with Stiff Diaphragms 371
16.15IO Immediate Occupancy Structural Checklist for Building Types RM1: Reinforced Masonry Bearing Walls and RM1a: Reinforced Masonry Bearing Walls with Stiff Diaphragms 372
C16.15IO Immediate Occupancy Structural Checklist for Building Types RM1: Reinforced Masonry Bearing Walls with Flexible Diaphragms and RM1a: Reinforced Masonry Bearing Walls with Stiff Diaphragms 372

16.16LS Life Safety Structural Checklist for Building Types URM: Unreinforced Masonry Bearing Walls with Flexible Diaphragms and URMa: Unreinforced Masonry Bearing Walls with Stiff Diaphragms . . . 373
C16.16LS Life Safety Structural Checklist for Building Types URM: Unreinforced Masonry Bearing Walls with Flexible Diaphragms and URMa: Unreinforced Masonry Bearing Walls with Stiff Diaphragms . . . 373
16.16IO Immediate Occupancy Structural Checklist for Building Types URM: Unreinforced Masonry Bearing Walls with Flexible Diaphragms and URMa: Unreinforced Masonry Bearing Walls with Stiff Diaphragms . . . 374
C16.16IO Immediate Occupancy Structural Checklist for Building Types URM: Unreinforced Masonry Bearing Walls with Flexible Diaphragms and URMa: Unreinforced Masonry Bearing Walls with Stiff Diaphragms . . . 375
16.17 Nonstructural Checklist . . . 376
C16.17 Nonstructural Checklist . . . 376

17 REFERENCE DOCUMENTS . . . 381
17.1 Consensus Standards and Other Reference Documents . . . 381
C17.1 Commentary References . . . 382

APPENDIX A GUIDELINES FOR DEFICIENCY-BASED PROCEDURES . . . 391
A.1 General . . . 391
A.2 Procedures for Building Systems . . . 391
A.2.1 General . . . 391
A.2.2 Configuration . . . 392
A.2.3 Condition of Materials . . . 395
A.3 Procedures for Seismic-Force-Resisting Systems . . . 397
A.3.1 Moment Frames . . . 397
A.3.2 Shear Walls . . . 403
A.3.3 Braced Frames . . . 409
A.4 Procedures for Diaphragms . . . 412
A.4.1 General . . . 412
A.4.2 Wood Diaphragms . . . 415
A.4.3 Metal Deck Diaphragms . . . 416
A.4.4 Concrete Diaphragms . . . 416
A.4.5 Precast Concrete Diaphragms . . . 417
A.4.6 Horizontal Bracing . . . 417
A.4.7 Other Diaphragms . . . 417
A.5 Procedures for Connections . . . 417
A.5.1 Anchorage for Normal forces . . . 417
A.5.2 Shear Transfer . . . 418
A.5.3 Vertical Components . . . 419
A.5.4 Interconnection of Elements . . . 420
A.5.5 Panel Connections . . . 421
A.6 Procedures for Geologic Site Hazards and Foundations . . . 421
A.6.1 Geologic Site Hazards . . . 421
A.6.2 Foundation Configuration . . . 422
A.7 Procedures for Nonstructural Components . . . 422
A.7.1 Partitions . . . 423
A.7.2 Ceiling Systems . . . 423
A.7.3 Light Fixtures . . . 424
A.7.4 Cladding and Glazing . . . 424
A.7.5 Masonry Veneer . . . 425
A.7.6 Metal Stud Backup Systems . . . 426
A.7.7 Concrete Block and Masonry Back-up Systems . . . 426
A.7.8 Parapets, Cornices, Ornamentation, and Appendages . . . 426
A.7.9 Masonry Chimneys . . . 426
A.7.10 Stairs . . . 426
A.7.11 Building Contents and Furnishing . . . 427
A.7.12 Mechanical and Electrical Equipment . . . 427
A.7.13 Piping . . . 428
A.7.14 Ducts . . . 429
A.7.15 Hazardous Materials . . . 429
A.7.16 Elevators . . . 430

APPENDIX B APPLYING ASCE 41-13 IN BUILDING CODES, REGULATORY POLICIES, AND MITIGATION PROGRAMS **431**
B.1 Introduction 431
B.2 Mandatory Mitigation 431
B.2.1 Performance Objectives 431
B.2.2 Implementation Issues 432
B.2.3 Historic Buildings 432
B.2.4 Example Programs 432
B.3 Voluntary Mitigation 433
B.3.1 Performance Objectives 433
B.3.2 Implementation Issues 434
B.3.3 Historic Buildings 434
B.3.4 Example Programs 434
B.4 Triggered Mitigation 434
B.4.1 Performance Objectives 434
B.4.2 Implementation Issues 435
B.4.3 Historic Buildings 435
B.4.4 Example Programs 435

APPENDIX C
Summary Data Sheet 437

Tier 1 Checklists
16.1 Basic Checklist 438
16.1.2LS Life Safety Basic Configuration Checklist 439
16.1.2IO Immediate Occupancy Basic Configuration Checklist 440
16.2LS Life Safety Structural Checklist for Building Types W1: Wood Light Frames and W1a: Multi-Story, Multi-Unit Residential Wood Frame 441
16.2IO Immediate Occupancy Structural Checklist for Building Types W1: Wood Light Frames and W1a: Multi-Story, Multi-Unit Residential Wood Frame 443
16.3LS Life Safety Structural Checklist for Building Type W2: Wood Frames, Commercial and Industrial 445
16.3IO Immediate Occupancy Structural Checklist for Building Type W2: Wood Frames, Commercial and Industrial 447
16.4LS Life Safety Structural Checklist for Building Types S1: Steel Moment Frames with Stiff Diaphragms and S1a: Steel Moment Frames with Flexible Diaphragms 449
16.4IO Immediate Occupancy Structural Checklist for Building Types S1: Steel Moment Frames with Stiff Diaphragms and S1a: Steel Moment Frames with Flexible Diaphragms 451
16.5LS Life Safety Structural Checklist for Building Types S2: Steel Braced Frames with Stiff Diaphragms and S2a: Steel Braced Frames with Flexible Diaphragms 453
16.5IO Immediate Occupancy Structural Checklist for Building Types S2: Steel Braced Frames and S2a: Steel Braced Frames with Flexible Diaphragms 455
16.6LS Life Safety Structural Checklist for Building Type S3: Steel Light Frames 457
16.6IO Immediate Occupancy Structural Checklist for Building Type S3: Steel Light Frames 458
16.7LS Life Safety Structural Checklist for Building Type S4: Dual Systems with Backup Steel Moment Frames and Stiff Diaphragms 460
16.7IO Immediate Occupancy Structural Checklist for Building Type S4: Dual Systems with Backup Steel Moment Frames and Stiff Diaphragms 462
16.8LS Life Safety Structural Checklist for Building Types S5: Steel Frames with Infill Masonry Shear Walls and Stiff Diaphragms and S5a: Steel Frames with Infill Masonry Shear Walls and Flexible Diaphragms 465
16.8IO Immediate Occupancy Structural Checklist for Building Types S5: Steel Frames with Infill Masonry Shear Walls and Stiff Diaphragms and S5a: Steel Frames with Infill Masonry Shear Walls and Flexible Diaphragms 467
16.9LS Life Safety Structural Checklist for Building Type C1: Concrete Moment Frames 469
16.9IO Immediate Occupancy Structural Checklist for Building Type C1: Concrete Moment Frames . 471
16.10LS Life Safety Structural Checklist for Building Types C2: Concrete Shear Walls with Stiff Diaphragms and C2a: Concrete Shear Walls with Flexible Diaphragms 473
16.10IO Immediate Occupancy Structural Checklist for Building Types C2: Concrete Shear Walls with Stiff Diaphragms and C2a: Concrete Shear Walls with Flexible Diaphragms 475
16.11LS Life Safety Structural Checklist for Building Types C3: Concrete Frames with Infill Masonry Shear Walls and C3a: Concrete Frames with Infill Masonry Shear Walls and Flexible Diaphragms 477

16.11IO Immediate Occupancy Structural Checklist for Building Types C3: Concrete Frames with Infill Masonry Shear Walls and Stiff Diaphragms and C3a: Concrete Frames with Infill Masonry Shear Walls and Flexible Diaphragms . . . 479
16.12LS Life Safety Structural Checklist for Building Types PC1: Precast or Tilt-Up Concrete Shear Walls with Flexible Diaphragms and PC1a: Precast or Tilt-Up Concrete Shear Walls with Stiff Diaphragms . . . 481
16.12IO Immediate Occupancy Structural Checklist for Building Types PC1: Precast or Tilt-Up Concrete Shear Walls with Flexible Diaphragms and PC1a: Precast or Tilt-Up Concrete Shear Walls with Stiff Diaphragms . . . 483
16.13LS Life Safety Structural Checklist for Building Type PC2: Precast Concrete Frames with Shear Walls . . . 485
16.13IO Immediate Occupancy Structural Checklist for Building Type PC2: Precast Concrete Frames with Shear Walls . . . 487
16.14LS Life Safety Structural Checklist for Building Type PC2a: Precast Concrete Frames without Shear Walls . . . 489
16.14IO Immediate Occupancy Structural Checklist for Building Type PC2a: Precast Concrete Frames without Shear Walls . . . 491
16.15LS Life Safety Structural Checklist for Building Types RM1: Reinforced Masonry Bearing Walls with Flexible Diaphragms and RM2: Reinforced Masonry Bearing Walls with Stiff Diaphragms . . . 493
16.15IO Immediate Occupancy Structural Checklist for Building Types RM1: Reinforced Masonry Bearing Walls and RM1a: Reinforced Masonry Bearing Walls with Stiff Diaphragms . . . 495
16.16LS Life Safety Structural Checklist for Building Types URM: Unreinforced Masonry Bearing Walls with Flexible Diaphragms and URMa: Unreinforced Masonry Bearing Walls with Stiff Diaphragms . . . 497
16.16IO Immediate Occupancy Structural Checklist for Building Types URM: Unreinforced Masonry Bearing Walls with Flexible Diaphragms and URMa: Unreinforced Masonry Bearing Walls with Stiff Diaphragms . . . 499
16.17 Nonstructural Checklist . . . 501

INDEX . . . 507

Outline Map of ASCE 31-03 and ASCE 41-06 to ASCE 41-13

ASCE 31-03		ASCE 41-13		
Section	**Title**	**Section**	**Title**	**Notes**
Chapter 1	**General Provisions**			
1.1	Scope	1.1	Scope	
1.2	Basic Requirements	3.3	Evaluation and Retrofit Methods	
1.2.1	Tier 1—Screening Phase	3.3.2	Tier 1 Screening Procedure	
1.2.2	Tier 2—Evaluation Phase	3.3.3	Tier 2 Deficiency-Based Evaluation and Retrofit Procedures	
1.2.3	Tier 3—Detailed Evaluation Phase	3.3.4	Tier 3 Systematic Evaluation and Retrofit Procedures	
1.2.4	Final Report	1.4.5	Evaluation Report	
1.3	Definitions	1.2.1	Definitions	
1.4	Notation	1.2.2	Notations	
1.5	References		References	
Chapter 2	**Evaluation Requirements**			
2.1	General			
2.2	Level of Investigation Required	4.2	Scope of Investigation Required	
2.3	Site Visit	4.2.1	On-Site Investigation and Condition Assessment	
2.4	Level of Performance	4.1.1	Performance Level	
2.5	Level of Seismicity	4.1.3	Level of Seismicity	
2.6	Building Type	4.2.2	Building Type	
Chapter 3	**Screening Phase (Tier 1)**			
3.1	General	4.1	Scope	
3.2	Benchmark Buildings	4.3	Benchmark Buildings	
3.3	Selection and Use of Checklists	4.4	Selection and Use of Checklists	
3.4	Further Evaluation Requirements	3.3.1	Limitations on the Use of the Tier 1 and 2 Evaluation and Retrofit Procedures	
3.5	Tier 1 Analysis	4.5	Tier 1 Analysis	
3.5.1	Overview	4.5.1	Overview	
3.5.2	Seismic Shear Forces	4.5.2	Seismic Shear Forces	
3.5.3	Quick Checks for Strength and Stiffness	4.5.3	Quick Checks for Strength and Stiffness	
3.6	Level of Low Seismicity Checklist	16.1.1	Very Low Seismicity Checklist	
3.7	Structural Checklists	16.1	Basic Checklists	
3.8	Geologic Site Hazards and Foundations Checklist	16.1.2	Basic Configuration Checklist	
3.9	Nonstructural Checklists	16.17	Nonstructural Checklist	
Chapter 4	**Evaluation Phase (Tier 2)**			
4.1	General	5.1	Scope	
4.2	Tier 2 Analysis	5.2	General Requirements	
4.2.1	General			No corresponding section
4.2.2	Analysis Procedures for LSP and LDP	5.2.4	Tier 2 Analysis Methods	
4.2.3	Mathematical Model for LSP and LDP	7.2.3	Mathematical Modeling	
4.2.4	Acceptance Criteria for LSP and LDP	5.2.5	Tier 2 Acceptance Criteria	
4.2.5	Out-of-Plane Wall Forces	7.2.11	Structural Walls and Their Anchorage	
4.2.6	Special Procedure for Unreinforced Masonry	15.2	Special Procedure for Unreinforced Masonry	
4.3	Procedures for Building Systems	5.4	Procedures for Basic Configuration of Building Systems	
4.3.1	General	5.4.1	General	
4.3.2	Configuration	5.4.2	Building Configuration	

ASCE 31-03		ASCE 41-13		
Section	**Title**	**Section**	**Title**	**Notes**
4.3.3	Condition of Materials	5.2.3	Condition Assessment	
4.4	Procedures for Lateral-Force-Resisting Systems	5.5	Procedures for Seismic-Force-Resisting Systems	
4.4.1	Moment Frames	5.5.2	Procedures for Moment Frames	
4.4.2	Shear Walls	5.5.3	Procedures for Shear Walls	
4.4.3	Braced Frames	5.5.4	Procedures for Braced Frames	
4.5	Procedures for Diaphragms	5.6	Procedures for Diaphragms	
4.5.1	General	5.6.1	General Procedures for Diaphragms	
4.5.2	Wood Diaphragms	5.6.2	Procedures for Wood Diaphragms	
4.5.3	Metal Deck Diaphragms	5.6.3	Procedures for Metal Deck Diaphragms	
4.5.4	Concrete Diaphragms			No corresponding section
4.5.5	Precast Concrete Diaphragms	5.6.4	Procedures for Precast Concrete Diaphragms	
4.5.6	Horizontal Bracing			No corresponding section
4.5.7	Other Diaphragms	5.6.5	Diaphragms Other than Wood, Metal Deck, Concrete, or Horizontal Bracing	
4.6	Procedures for Connections	5.7	Procedures for Connections	
4.6.1	Anchorage for Normal Forces	5.7.1	Anchorage for Normal Forces	
4.6.2	Shear Transfer	5.7.2	Connections for Shear Transfer	
4.6.3	Vertical Components	5.7.3	Connections for Vertical Elements	
4.6.4	Interconnection of Elements	5.7.4	Interconnection of Elements	
4.6.5	Panel Connections	5.7.5	Roof and Wall Panel Connections	
4.7	Procedures for Geologic Site Hazards and Foundations	5.4.3	Geologic Site Hazards and Foundation Components	
4.7.1	Geologic Site Hazards	5.4.2.1	Geologic Site Hazards	
4.7.2	Condition of Foundations	5.4.3.2	Foundation Performance	
4.7.3	Capacity of Foundations	5.4.3.3	Overturning	
Chapter 5	**Detailed Evaluation Phase (Tier 3)**			
5.1	General	3.3.4	Tier 3 Systematic Evaluation and Retrofit Procedures	
5.2	Available Procedures			No corresponding Section
5.2.1	Provisions for Seismic Rehabilitation Design	6.3	Tier 3 Evaluation Requirements	
5.2.2	Provisions for Design of New Buildings			No corresponding Section
5.3	Selection of Detailed Procedures			No corresponding Section
App B	**Summary Data Sheet**	**App C**	**Summary Data Sheet**	

ASCE 41-06		ASCE 41-13		
Section	**Title**	**Section**	**Title**	**Notes**
Chapter 1	**Rehabilitation Requirements**			
1.1	Scope	1.1	Scope	
1.2	Design Basis	1.3	Evaluation and Retrofit Process	
1.3	Seismic Rehabilitation Process	1.5	Seismic Retrofit Process	
1.3.1	Initial Considerations	1.5.1	Initial Considerations	
1.3.2	Selection of Rehabilitation Objective	1.5.2	Selection of Performance Objective	
1.3.3	As-Built Information	1.5.4	As-Built Information	
1.3.4	Rehabilitation Method	1.5.5	Retrofit Procedures	
1.3.5	Rehabilitation Measures	1.5.7	Retrofit Measures	
1.3.6	Verification of Rehabilitation Design	1.5.8	Verification of Retrofit Design	
1.4	Rehabilitation Objectives	2.2	Performance Objectives	
1.4.1	Basic Safety Objective	2.2.1	Basic Performance Objective for Existing Buildings (BPOE)	
1.4.2	Enhanced Rehabilitation Objectives	2.2.2	Enhanced Performance Objectives	
1.4.3	Limited Rehabilitation Objectives	2.2.3	Limited Performance Objectives	
1.5	Target Building Performance Levels	2.3	Target Building Performance Levels	
1.5.1	Structural Performance Levels and Ranges	2.3.1	Structural Performance Levels and Ranges	
1.5.2	Nonstructural Performance Levels	2.3.2	Nonstructural Performance Levels	
1.5.3	Designation of Target Building Performance Levels	2.3.3	Designation of Target Building Performance Levels	
1.6	Seismic Hazard	2.4	Seismic Hazard	
1.6.1	General Procedure for Hazard Due to Ground Shaking	2.4.1	General Procedure for Hazard Due to Ground Shaking	
1.6.2	Site-Specific Procedure for Hazard Due to Ground Shaking	2.4.2	Site-Specific Procedure for Hazard Due to Ground Shaking	
1.6.3	Level of Seismicity	2.5	Level of Seismicity	
Chapter 2	**Scope**			
2.1	Scope	3.1	Scope	
2.2	As-Built Information	3.2	As-Built Information	
2.2.1	Building Configuration	3.2.2	Building Configuration	
2.2.2	Component Properties	3.2.3	Component Properties	
2.2.3	Site and Foundation Information	3.2.4	Site and Foundation Information	
2.2.4	Adjacent Buildings	3.2.5	Adjacent Buildings	
2.2.5	Primary and Secondary Components	7.2.3.3	Primary and Secondary Components	
2.2.6	Data Collection Requirements	6.2	Data Collection Requirements	
2.3	Rehabilitation Methods	3.3	Evaluation and Retrofit Methods	
2.3.1	Simplified Rehabilitation Method	3.3.3	Tier 2 Deficiency-Based Evaluation and Retrofit Procedures	
2.3.2	Systematic Rehabilitation Method	3.3.4	Tier 3 Systematic Evaluation and Retrofit Procedures	
2.4	Analysis Procedures	7.3	Analysis Procedure Selection	
2.4.1	Linear Procedures	7.3.1	Linear Procedures	
2.4.2	Nonlinear Procedures	7.3.2	Nonlinear Procedures	
2.4.3	Alternative Rational Analysis	7.3.3	Alternative Rational Analysis	
2.4.4	Acceptance Criteria	7.5.1	General Requirements	
2.5	Rehabilitation Strategies	1.5.6	Retrofit Strategies	
2.6	General Design Requirements	7.2	General Analysis Requirements	
2.6.1	Multidirectional Seismic Effects	7.2.5	Multidirectional Seismic Effects	
2.6.2	P-Δ Effects	7.2.6	P-Δ Effects	
2.6.3	Horizontal Torsion	7.2.3.2	Torsion	
2.6.4	Overturning	7.2.8	Overturning	
2.6.5	Continuity	7.2.10	Continuity	
2.6.6	Diaphragms	7.2.9	Diaphragms, Chords, Collectors, and Ties	
2.6.7	Walls	7.2.11	Structural Walls and Their Anchorage	
2.6.8	Nonstructural Components			

ASCE 41-06		ASCE 41-13		
Section	**Title**	**Section**	**Title**	**Notes**
2.6.9	Structures Sharing Common Elements	7.2.12	Structures Sharing Common Elements	
2.6.10	Building Separation	7.2.13	Building Separation	
2.6.11	Vertical Seismic Effects	7.2.5.2	Vertical Seismic Effects	
2.7	Construction Quality Assurance	1.5.10	Construction Quality Assurance	
2.7.1	Construction Quality Assurance Plan	1.5.10.1	Construction Quality Assurance Plan	
2.7.2	Construction Quality Assurance Requirements	1.5.10.2	Construction Quality Assurance Requirements	
2.7.3	Responsibilities of the Authority Having Jurisdiction	1.5.10.3	Responsibilities of the Authority Having Jurisdiction	
2.8	Alternative Modeling Parameters and Acceptance Criteria	7.6	Alternative Modeling Parameters and Acceptance Criteria	
2.8.1	Experimental Setup	7.6.1	Experimental Setup	
2.8.2	Data Reduction and Reporting	7.6.2	Data Reduction and Reporting	
2.8.3	Design Parameters and Acceptance Criteria	7.6.3	Evaluation or Retrofit Parameters and Acceptance Criteria for Subassemblies Based on Experimental Data	
Chapter 3	**Analysis Procedures**			
3.1	Scope	7.1	Scope	
3.2	General Analysis Requirements	7.2	General Analysis Requirements	
3.2.1	Analysis Procedure Selection	7.2.1	Analysis Procedures	
3.2.2	Mathematical Modeling	7.2.3	Mathematical Modeling	
3.2.3	Configuration	7.2.4	Configuration	
3.2.4	Diaphragms	7.2.9	Diaphragms, Chords, Collectors, and Ties	
3.2.5	P-Δ Effects	7.2.6	P-Δ Effects	
3.2.6	Soil–Structure Interaction	7.2.7	Soil–Structure Interaction	
3.2.7	Multidirectional Seismic Effects	7.2.5	Multidirectional Seismic Effects	
3.2.8	Component Gravity Loads for Load Combinations	7.2.2	Component Gravity Loads and Load Combinations	
3.2.9	Verification of Design Assumptions	7.2.14	Verification of Evaluation or Retrofit Assumptions	
3.2.10	Overturning	7.2.8	Overturning	
3.3	Analysis Procedures	7.4	Analysis Procedures	
3.3.1	Linear Static Procedure	7.4.1	Linear Static Procedure (LSP)	
3.3.2	Linear Dynamic Procedure	7.4.2	Linear Dynamic Procedure (LDP)	
3.3.3	Nonlinear Static Procedure	7.4.3	Nonlinear Static Procedure (NSP)	
3.3.4	Nonlinear Dynamic Procedure	7.4.4	Nonlinear Dynamic Procedure (NDP)	
3.4	Acceptance Criteria	7.5	Acceptance Criteria	
3.4.1	General Requirements	7.5.1	General Requirements	
3.4.2	Linear Procedures	7.5.2	Linear Procedures	
3.4.3	Nonlinear Procedures	7.5.3	Nonlinear Procedures	
Chapter 4	**Foundations and Geologic Site Hazards**			
4.1	Scope	8.1	Scope	
4.2	Site Characterization	8.2	Site Characteristics	
4.2.1	Foundation Information	8.2.1	Foundation Information	
4.2.2	Seismic Geologic Site Hazards	8.2.2	Seismic Geologic Site Hazards	
4.3	Mitigation of Seismic-Geologic Site Hazards	8.3	Mitigation of Seismic-Geologic Site Hazards	
4.4	Foundation Strength and Stiffness	8.4	Foundation Strength and Stiffness	
4.4.1	Expected Capacities of Foundations	8.4.1	Expected Foundation Capacities	
4.4.2	Load-Deformation Characteristics for Foundations	8.4.2	Load-Deformation Characteristics of Shallow Foundations	
4.4.3	Foundation Acceptance Criteria	8.4.5	Deep Foundation Acceptance Criteria	

ASCE 41-06		ASCE 41-13		
Section	**Title**	**Section**	**Title**	**Notes**
4.5	Kinematic Interaction and Radiation Damping Soil-Structure Interaction Effects	8.5	Kinematic Interaction and Radiation Damping Soil-Structure Interaction Effects	
4.5.1	Kinematic Interaction	8.5.1	Kinematic Interaction	
4.5.2	Foundation Damping Soil-Structure Interaction Effects	8.5.2	Foundation Damping Soil-Structure Interaction Effects	
4.6	Seismic Earth Pressure	8.6	Seismic Earth Pressure	
4.7	Foundation Rehabilitation	8.7	Foundation Retrofit	
Chapter 5	**Steel**			
5.1	Scope	9.1	Scope	
5.2	Material Properties and Condition Assessment	9.2	Material Properties and Condition Assessment	
5.2.1	General	9.2.1	General	
5.2.2	Properties of In-Place Materials and Components	9.2.2	Properties of In-Place Materials and Components	
5.2.3	Condition Assessment	9.2.3	Condition Assessment	
5.3	General Assumptions and Requirements	9.3	General Assumptions and Requirements	
5.3.1	Stiffness	9.3.1	Stiffness	
5.3.2	Design Strengths and Acceptance Criteria	9.3.2	Strengths and Acceptance Criteria	
5.3.3	Rehabilitation Measures	9.3.3	Retrofit Measures	
5.4	Steel Moment Frames	9.4	Steel Moment Frames	
5.4.1	General	9.4.1	General	
5.4.2	Fully Restrained Moment Frames	9.4.2	Fully Restrained (FR) Moment Frames	
5.4.3	Partially Restrained Moment Frames	9.4.3	Partially Restrained (PR) Moment Frames	
5.5	Steel Braced Frames	9.5	Concentrically Braced Frames	
5.5.1	General	9.5.1	General	
5.5.2	Concentric Braced Frames	9.5.2	Concentrically Braced Frames	
5.5.3	Eccentric Braced Frames	9.5.3	Eccentrically Braced Frames	
5.6	Steel Plate Shear Walls	9.6	Steel Plate Shear Walls	
5.6.1	General	9.6.1	General	
5.6.2	Stiffness	9.6.2	Stiffness of Steel Plate Shear Walls	
5.6.3	Strength	9.6.3	Strength of Steel Plates Shear Walls	
5.6.4	Acceptance Criteria	9.6.4	Acceptance Criteria for Steel Plate Shear Walls	
5.6.5	Rehabilitation Measures	9.6.5	Retrofit Measures for Steel Plate Shear Walls	
5.7	Steel Frames with Infills	9.7	Steel Frames with Infills	
5.8	Diaphragms	9.8	Diaphragms	
5.8.1	Bare Metal Deck Diaphragms	9.8.1	Bare Metal Deck Diaphragms	
5.8.2	Metal Deck Diaphragms with Structural Concrete Topping	9.8.2	Metal Deck Diaphragms with Structural Concrete Topping	
5.8.3	Metal Deck Diaphragms with Nonstructural Topping	9.8.3	Metal Deck Diaphragms with Nonstructural Topping	
5.8.4	Horizontal Steel Bracing (Steel Truss Diaphragms)	9.8.4	Horizontal Steel Bracing (Steel Truss Diaphragms)	
5.8.5	Archaic Diaphragms	9.8.5	Archaic Diaphragms	
5.8.6	Chord and Collector Elements	9.8.6	Chord and Collector Elements	
5.9	Steel Pile Foundations	9.9	Steel Pile Foundations	
5.9.1	General	9.9.1	General	
5.9.2	Stiffness	9.9.2	Stiffness of Steel Pile Foundations	
5.9.3	Strength	9.9.3	Strength of Steel Pile Foundations	
5.9.4	Acceptance Criteria	9.9.4	Acceptance Criteria for Steel Pile Foundations	
5.9.5	Rehabilitation Measures	9.9.5	Retrofit Measures for Steel Pile Foundations	

ASCE 41-06		ASCE 41-13		
Section	**Title**	**Section**	**Title**	**Notes**
5.10	Cast and Wrought Iron	9.10	Cast and Wrought Iron	
5.10.1	General	9.10.1	General	
5.10.2	Stiffness	9.10.2	Stiffness of Cast and Wrought Iron	
5.10.3	Strength and Acceptance Criteria	9.10.3	Strength and Acceptance Criteria for Cast and Wrought Iron	
Chapter 6	**Concrete**			
6.1	Scope	10.1	Scope	
6.2	Material Properties and Condition Assessment	10.2	Material Properties and Condition Assessment	
6.2.1	General	10.2.1	General	
6.2.2	Properties of In-Place Materials and Components	10.2.2	Properties of In-Place Materials and Components	
6.2.3	Condition Assessment	10.2.3	Condition Assessment	
6.2.4	Knowledge Factor	10.2.4	Knowledge Factor	
6.3	General Assumptions and Requirements	10.3	General Assumptions and Requirements	
6.3.1	Modeling and Design	10.3.1	Modeling and Design	
6.3.2	Strength and Deformability	10.3.2	Strength and Deformability	
6.3.3	Flexure and Axial Loads	10.3.3	Flexure and Axial Loads	
6.3.4	Shear and Torsion	10.3.4	Shear and Torsion	
6.3.5	Development and Splices of Reinforcement	10.3.5	Development and Splices of Reinforcement	
6.3.6	Connections to Existing Concrete	10.3.6	Connections to Existing Concrete	
6.3.7	Rehabilitation	10.3.7	Retrofit Measures	
6.4	Concrete Moment Frames	10.4	Concrete Moment Frames	
6.4.1	Types of Concrete Moment Frames	10.4.1	Types of Concrete Moment Frames	
6.4.2	Reinforced Concrete Beam-Column Moment Frames	10.4.2	Reinforced Concrete Beam-Column Moment Frames	
6.4.3	Post-Tensioned Concrete Beam-Concrete Moment Frames	10.4.3	Post-Tensioned Concrete Beam-Concrete Moment Frames	
6.4.4	Slab-Column Moment Frames	10.4.4	Slab-Column Moment Frames	
6.5	Precast Concrete Frames	10.5	Precast Concrete Frames	
6.5.1	Types of Precast Concrete Frames	10.5.1	Types of Precast Concrete Frames	
6.5.2	Precast Concrete Frames Expected to Resist Lateral Load	10.5.2	Precast Concrete Frames Expected to Resist Lateral Load	
6.5.3	Precast Concrete Frames Not Expected to Resist Lateral Loads Directly	10.5.3	Precast Concrete Frames Not Expected to Resist Lateral Loads Directly	
6.6	Concrete Frames with Infills	10.6	Concrete Frames with Infills	
6.6.1	Types of Concrete Frames with Infills	10.6.1	Types of Concrete Frames with Infills	
6.6.2	Concrete Frames with Masonry Infills	10.6.2	Concrete Frames with Masonry Infills	
6.6.3	Concrete Frames with Concrete Infills	10.6.3	Concrete Frames with Concrete Infills	
6.7	Concrete Shear Walls	10.7	Concrete Shear Walls	
6.7.1	Types of Concrete Shear Walls and Associated Components	10.7.1	Types of Concrete Shear Walls and Associated Components	
6.7.2	Reinforced Concrete Shear Walls, Wall Segments, Coupling Beams, and Reinforced Concrete Columns Supporting Discontinuous Shear Walls	10.7.2	Reinforced Concrete Shear Walls, Wall Segments, and Coupling Beams	
6.8	Precast Concrete Shear Walls	10.8	Precast Concrete Shear Walls	
6.8.1	Types of Precast Shear Walls	10.8.1	Types of Precast Shear Walls	
6.8.2	Precast Concrete Shear Walls and Wall Segments	10.8.2	Precast Concrete Shear Walls and Wall Segments	
6.9	Concrete Braced Frames	10.9	Concrete Braced Frames	
6.9.1	Types of Concrete Braced Frames	10.9.1	Types of Concrete Braced Frames	

ASCE 41-06		ASCE 41-13		
Section	**Title**	**Section**	**Title**	**Notes**
6.9.2	General Considerations	10.9.2	General	
6.9.3	Stiffness	10.9.3	Stiffness of Concrete Braced Frames	
6.9.4	Strength	10.9.4	Strength of Concrete Braced Frames	
6.9.5	Acceptance Criteria	10.9.5	Acceptance Criteria for Concrete Braced Frames	
6.9.6	Rehabilitation Measures	10.9.6	Retrofit Measures for Concrete Braced Frames	
6.10	Cast-in-Place Concrete Diaphragms	10.10	Cast-in-Place Concrete Diaphragms	
6.10.1	Components of Cast-in-Place Concrete Diaphragms	10.10.1	Components of Cast-in-Place Concrete Diaphragms	
6.10.2	Analysis, Modeling, and Acceptance Criteria	10.10.2	Analysis, Modeling, and Acceptance Criteria for Cast-in-Place Concrete Diaphragms	
6.10.3	Rehabilitation Measures	10.10.3	Retrofit Measures for Cast-in-Place Concrete Diaphragms	
6.11	Precast Concrete Diaphragms	10.11	Precast Concrete Diaphragms	
6.11.1	Components of Precast Concrete Diaphragms	10.11.1	Components of Precast Concrete Diaphragms	
6.11.2	Analysis, Modeling, and Acceptance Criteria	10.11.2	Analysis, Modeling, and Acceptance Criteria for Precast Concrete Diaphragms	
6.11.3	Rehabilitation Measures	10.11.3	Retrofit Measures for Precast Concrete Diaphragms	
6.12	Concrete Foundation Components	10.12	Concrete Foundations	
6.12.1	Types of Concrete Foundations	10.12.1	Types of Concrete Foundations	
6.12.2	Analysis of Existing Foundations	10.12.2	Analysis of Existing Concrete Foundations	
6.12.3	Evaluation of Existing Condition	10.12.3	Evaluation of Existing Condition	
6.12.4	Rehabilitation Measures	10.12.4	Retrofit Measures for Concrete Foundations	
Chapter 7	**Masonry**			
7.1	Scope	11.1	Scope	
7.2	Material Properties and Condition Assessment	11.2	Condition Assessment and Material Properties	
7.2.1	General	11.2.1	General	
7.2.2	Properties of In-Place Materials	11.2.2	Condition Assessment	
7.2.3	Condition Assessment	11.2.3	Properties of In-Place Materials	
7.2.4	Knowledge Factor	11.2.4	Knowledge Factor	
7.3	Masonry Walls	11.3	Masonry Walls	
7.3.1	Types of Masonry Walls	11.3.1	Types of Masonry Walls	
7.3.2	Unreinforced Masonry Walls and Wall Piers In-Plane	11.3.2	Unreinforced Masonry (URM) Walls and Wall Piers Subject to In-Plane Actions	
7.3.3	Unreinforced Masonry Walls Out-of-Plane	11.3.3	Unreinforced Masonry Walls Subject to Out-of-Plane Actions	
7.3.4	Reinforced Masonry Walls and Wall Piers In-Plane	11.3.4	Reinforced Masonry Walls and Wall Piers In-Plane	
7.3.5	Reinforced Masonry Wall Out-of-Plane	11.3.5	Reinforced Masonry Wall Out-of-Plane Actions	
7.4	Masonry Infills	11.4	Masonry Infills	
7.4.1	Types of Masonry Infills	11.4.1	Types of Masonry Infills	
7.4.2	Masonry Infills In-Plane	11.4.2	Masonry Infill In-Plane Actions	
7.4.3	Masonry Infills Out-of-Plane	11.4.3	Masonry Infill Wall Out-of-Plane Actions	
7.5	Anchorage to Masony Walls	11.5	Anchorage to Masony Walls	
7.5.1	Types of Anchors	11.5.1	Types of Anchors	
7.5.2	Analysis of Anchors	11.5.2	Analysis of Anchors	
7.6	Masonry Foundation Elements	11.6	Masonry Foundation Elements	
7.6.1	Types of Masonry Foundations	11.6.1	Types of Masonry Foundations	

ASCE 41-06		ASCE 41-13		
Section	**Title**	**Section**	**Title**	**Notes**
7.6.2	Analysis of Existing Foundations	11.6.2	Analysis of Existing Foundations	
7.6.3	Rehabilitation Measures	11.6.3	Foundation Retrofit Measures	
Chapter 8	**Wood and Light Metal Framing**			
8.1	Scope	12.1	Scope	
8.2	Material Properties and Condition Assessment	12.2	Material Properties and Condition Assessment	
8.2.1	General	12.2.1	General	
8.2.2	Properties of In-Place Materials and Components	12.2.2	Properties of In-Place Materials and Components	
8.2.3	Condition Assessment	12.2.3	Condition Assessment	
8.2.4	Knowledge Factor	12.2.4	Knowledge Factor	
8.3	General Assumptions and Requirements	12.3	General Assumptions and Requirements	
8.3.1	Stiffness	12.3.1	Stiffness	
8.3.2	Strength and Acceptance Criteria	12.3.2	Strength and Acceptance Criteria	
8.3.3	Connection Requirements	12.3.3	Connection Requirements	
8.3.4	Rehabilitation Measures	12.3.4	Retrofit Measures	
8.4	Wood Light-Frame Shear Walls	12.4	Wood and CFS Light-Frame Shear Walls	
8.4.1	General	12.4.1	General	
8.4.2	Types of Wood Frame Shear Walls	12.4.2	Types of Wood Frame Shear Walls	
8.4.3	Types of Light Gauge Metal Frame Shear Walls	12.4.3	Types of CFS Light-Frame Shear Walls	
8.4.4	Single-Layer Horizontal Lumber Sheathing or Siding Shear Walls	12.4.2.1.1	Single-Layer Horizontal Lumber Sheathing or Siding	
8.4.5	Diagonal Lumber Sheathing Shear Walls	12.4.2.1.2	Diagonal Lumber Sheathing	
8.4.6	Vertical Wood Siding Shear Walls	12.4.2.1.3	Vertical Wood Siding Only	
8.4.7	Wood Siding over Horizontal Sheathing Shear Walls	12.4.2.1.4	Wood Siding over Horizontal Sheathing	
8.4.8	Wood Siding over Diagonal Sheathing	12.4.2.1.5	Wood Siding over Diagonal Sheathing	
8.4.9	Wood Structural Panel Sheathing	12.4.2.1.6	Wood Structural Panel Sheathing or Siding	
8.4.10	Stucco on Studs, Sheathing, or Fiberboard	12.4.2.1.7	Stucco on Studs	
8.4.11	Gypsum Plaster on Wood Lath	12.4.2.1.8	Gypsum Plaster on Wood Lath	
8.4.12	Gypsum Plaster on Gypsum Lath	12.4.2.1.9	Gypsum Plaster on Gypsum Lath	
8.4.13	Gypsum Wallboard	12.4.2.1.10	Gypsum Wallboard or Drywall	
8.4.14	Gypsum Sheathing	12.4.2.1.11	Gypsum Sheathing	
8.4.15	Plaster on Metal Lath	12.4.2.1.12	Plaster on Metal Lath	
8.4.16	Horizontal Lumber Sheathing with Cut-In Braces or Diagonal Blocking	12.4.2.1.13	Horizontal Lumber Sheathing with Cut-In Braces or Diagonal Blocking	
8.4.17	Fiberboard or Particleboard Sheathing	12.4.2.1.14	Fiberboard or Particleboard Sheathing	
8.4.18	Light Gauge Metal Frame Shear Walls	12.4.3	Types of CFS Light-Frame Shear Walls	
8.5	Wood Diaphragms	12.5	Wood Diaphragms	
8.5.1	General	12.5.1	General	
8.5.2	Types of Wood Diaphragms	12.5.2	Types of Wood Diaphragms	
8.5.3	Single Straight Sheathing	12.5.2.1.1	Single Straight Sheathing	
8.5.4	Double Straight Sheathing	12.5.2.1.2	Double Straight Sheathing	
8.5.5	Single Diagonal Sheathing	12.5.2.1.3	Single Diagonal Sheathing	
8.5.6	Diagonal Sheathing with Straight Sheathing or Flooring Above	12.5.2.1.4	Diagonal Sheathing with Straight Sheathing or Flooring Above	
8.5.7	Double Diagonal Sheathing	12.5.2.1.5	Double Diagonal Sheathing	
8.5.8	Wood Structural Panel Sheathing	12.5.2.1.6	Wood Structural Panel Sheathing	

ASCE 41-06		ASCE 41-13		
Section	**Title**	**Section**	**Title**	**Notes**
8.5.9	Wood Structural Panel Overlays on Straight or Diagonal Sheathing	12.5.2.2.1	Wood Structural Panel Overlays on Straight or Diagonal Sheathing	
8.5.10	Wood Structural Panel Overlays on Existing Wood Structural Panel Sheathing	12.5.2.2.2	Wood Structural Panel Overlays on Existing Wood Structural Panel Sheathing	
8.5.11	Braced Horizontal Diaphragms	12.5.2.1.7	Braced Horizontal Diaphragms	
8.6	Wood Foundations	12.6	Wood Foundations	
8.6.1	Types of Wood Foundations	12.6.1	Types of Wood Foundations	
8.6.2	Analysis, Strength, and Acceptance Criteria for Wood Foundations	12.6.2	Analysis, Strength, and Acceptance Criteria for Wood Foundations	
8.6.3	Rehabilitation Measures	12.6.3	Retrofit Measures for Wood Foundations	
8.7	Other Wood Elements and Components	12.7	Other Wood Elements and Components	
8.7.1	General	12.7.1	General	
Chapter 9	**Seismic Isolation and Energy Dissipation**			
9.1	Scope	14.1	Scope	
9.2	Seismic Isolation Systems	14.2	Seismic Isolation Systems	
9.2.1	General Requirements	14.2.1	General Requirements	
9.2.2	Mechanical Properties and Modeling of Seismic Isolation Systems	14.2.2	Mechanical Properties and Modeling of Seismic Isolation Systems	
9.2.3	General Criteria for Seismic Isolation Design	14.2.3	General Criteria for Seismic Isolation Design	
9.2.4	Linear Procedures	14.2.4	Linear Procedures	
9.2.5	Nonlinear Procedures	14.2.5	Nonlinear Procedures	
9.2.6	Nonstructural Components	14.2.6	Nonstructural Components	
9.2.7	Detailed System Requirements	14.2.7	Detailed System Requirements	
9.2.8	Design Review	14.2.7.1	Design Review	
9.2.9	Isolation System Testing and Design Properties	14.2.8	Isolation System Testing and Design Properties	
9.3	Passive Energy Dissipation Systems	14.3	Passive Energy Dissipation Systems	
9.3.1	General Requirements	14.3.1	General Requirements	
9.3.2	Implementation of Energy Dissipation Devices	14.3.2	Implementation of Energy Dissipation Devices	
9.3.3	Modeling of Energy Dissipation Devices	14.3.3	Modeling of Energy Dissipation Devices	
9.3.4	Linear Procedures	14.3.4	Linear Analysis Procedures	
9.3.5	Nonlinear Procedures	14.3.5	Nonlinear Analysis Procedures	
9.3.6	Detailed System Requirements	14.3.6	Detailed System Requirements	
9.3.7	Design Review	14.3.7	Design Review	
9.3.8	Required Tests of Energy Dissipation Devices	14.3.8	Required Tests of Energy Dissipation Devices	
9.4	Other Response Control Systems	14.4	Other Response Control Systems	
Chapter 10	**Simplified Rehabilititation**			
10.1	Scope			
10.2	Procedure	3.3.3.2	Retrofit Requirements	
10.2.1	Procedure for Reduced Rehabilitation	3.3.3.2.1	Procedure for Reduced Retrofit	
10.2.2	Procedure for Partial Rehabilitation	3.3.3.2.2	Procedure for Partial Retrofit	
10.3	Correction of Deficiencies	5.8	Tier 2 Deficiency-Based Retrofit Requirements	
Chapter 11	**Architectural, Mechanical, and Electrical Components**			
11.1	Scope	13.1	Scope	
11.2	Procedure	13.2	Evaluation and Retrofit Procedure for Nonstructural Components	

ASCE 41-06		ASCE 41-13		
Section	**Title**	**Section**	**Title**	**Notes**
11.2.1	Condition Assessment	13.2.1	Data Collection and Condition Assessment	
11.2.2	Sample Size	13.2.1	Data Collection and Condition Assessment	
11.3	Historical and Component Evaluation Considerations	13.3	Component Evaluation	
11.3.1	Historical Information	13.2.1	Data Collection and Condition Assessment	
11.3.2	Component Evaluation	13.3	Component Evaluation	
11.4	Rehabilitation			No corresponding section
11.5	Structural-Nonstructural Interaction			No corresponding section
11.5.1	Response Modification	13.1	Scope	
11.5.2	Base Isolation	13.3	Component Evaluation	
11.6	Classification of Acceleration-Sensitive and Deformation-Sensitive Components	13.2.2	Classification of Acceleration-Sensitive and Deformation-Sensitive Components	
11.7	Evaluation Procedures	13.4	Evaluation and Retrofit Procedures	
11.7.1	Analytical Procedure	13.4.1	Analytical Procedure	
11.7.2	Prescriptive Procedure	13.4.2	Prescriptive Procedure	
11.7.3	Force Analysis: Default Equations			No corresponding section
11.7.4	Force Analysis: General Equations	13.4.3	Force Analysis: General Equations	
11.7.5	Deformation Analysis	13.4.4	Deformation Analysis	
11.7.6	Other Procedures			No corresponding section
11.8	Rehabilitation Approaches	13.5	Retrofit Approaches	
11.9	Architectural Components: Definitions, Behavior, and Acceptance Criteria	13.6	Architectural Components: Definitions, Behavior, and Acceptance Criteria	
11.9.1	Exterior Wall Components	13.6.1	Exterior Wall Components	
11.9.2	Partitions	13.6.2	Partitions	
11.9.3	Interior Veneers	13.6.3	Interior Veneers	
11.9.4	Ceilings	13.6.4	Ceilings	
11.9.5	Parapets and Appendages	13.6.5	Parapets and Cornices	
11.9.6	Canopies and Marquees	13.6.6	Architectural Appendages and Marquees	
11.9.7	Chimneys and Stacks	13.6.7	Chimneys and Stacks	
11.9.8	Stairs and Stair Enclosures	13.6.8	Stairs and Stair Enclosures	
11.9.9	Doors Required for Emergency Services Egress in Essential Facilities	13.6.9	Doors Required for Emergency Services Egress in Essential Facilities	
11.10	Mechanical, Electrical, and Plumbing Components: Definitions, Behavior, and Acceptance Criteria	13.7	Mechanical, Electrical, and Plumbing Components: Definitions, Behavior, and Acceptance Criteria	
11.10.1	Mechanical Equipment	13.7.1	Mechanical Equipment	
11.10.2	Storage Vessels and Water Heaters	13.7.2	Storage Vessels and Water Heaters	
11.10.3	Pressure Piping	13.7.3	Pressure Piping	
11.10.4	Fire Suppression Piping	13.7.4	Fire Suppression Piping	
11.10.5	Fluid Piping other than Fire Suppression	13.7.5	Fluid Piping other than Fire Suppression	
11.10.6	Ductwork	13.7.6	Ductwork	
11.10.7	Electrical and Communications Equipment	13.7.7	Electrical and Communications Equipment	
11.10.8	Electrical and Communications Distribution Equipment	13.7.8	Electrical and Communications Distribution Equipment	
11.10.9	Light Fixtures	13.7.9	Light Fixtures	

ASCE 41-06		ASCE 41-13		
Section	**Title**	**Section**	**Title**	**Notes**
11.11	Furnishings and Interior Equipment: Definitions, Behavior, and Acceptance Criteria	13.8	Furnishings and Interior Equipment: Definitions, Behavior, and Acceptance Criteria	
11.11.1	Storage Racks	13.8.1	Storage Racks	
11.11.2	Bookcases	13.8.2	Contents	
11.11.3	Computer Access Floors	13.8.3	Computer Access Floors	
11.11.4	Hazardous Material Storage	13.8.4	Hazardous Material Storage	
11.11.5	Computer and Communications Racks	13.8.5	Computer and Communications Racks	
11.11.6	Elevators	13.8.6	Elevators	
11.11.7	Conveyors	13.8.7	Conveyors	
Appendix A	**Use of this Standard for Local or Directed Risk Mitigation Programs**	**Appendix B**	**Use of this Standard for Local or Directed Risk Mitigation Programs**	
	Symbols	1.2.2	Notations	
	Definitions	1.2.1	Definitions	

This page intentionally left blank

CHAPTER 1
GENERAL REQUIREMENTS

1.1 SCOPE

This standard for the *Seismic Evaluation and Retrofit of Existing Buildings*, referred to herein as "this standard," specifies nationally applicable provisions for the seismic evaluation and retrofit of buildings. *Seismic evaluation* is defined as an approved process or methodology of evaluating deficiencies in a building that prevent the building from achieving a selected Performance Objective. *Seismic retrofit* is defined in this standard as the design of measures to improve the seismic performance of structural or nonstructural components of a building by correcting deficiencies identified in a seismic evaluation relative to a selected Performance Objective.

Seismic evaluation and retrofit of existing buildings shall comply with requirements of this standard for conducting the seismic evaluation or retrofit to demonstrate compliance with, or achievement of the selected Performance Objective. This standard does not preclude a building from being evaluated or retrofitted by other procedures based on rational methods of analysis in accordance with principles of mechanics and approval by the authority having jurisdiction.

Definitions and notations used throughout this standard are contained in Section 1.2. References used throughout this standard are cited separately in Chapter 17. Where standards are referenced and no edition or date is appended, then the edition or dated document listed in Chapter 17 is to be used.

This standard provides three tiered procedures for seismic evaluation and two tiered procedures for seismic retrofit of existing buildings appropriate for use in areas of any level of seismicity. The evaluation and retrofit process basis for the standard is defined in Section 1.3. The processes for using this standard for seismic evaluation and retrofit and the associated procedures are defined in Sections 1.4 and 1.5, respectively.

C1.1 SCOPE

This standard consists of two parts: provisions, which contain the technical requirements, and commentary, intended to explain the provisions. Commentary for a given section is identified by the same section number preceded by the letter C, following the provision section. The standard is an update to ASCE 41-06 and supersedes ASCE 31-03 because content from that standard has been incorporated into this standard.

Applicability of the Standard: This standard is intended to serve as a nationally applicable tool for design professionals, code officials, and building owners undertaking the seismic evaluation or retrofit of existing buildings. The evaluation and retrofit requirements are intended to be used for either mandatory requirement by an authority having jurisdiction or for voluntary applications where not mandatory. This standard applies to the seismic retrofit of the overall structural system of a building and its nonstructural components, including ceilings and partitions, as well as mechanical, electrical, and plumbing systems. All aspects of building performance are considered and defined in terms of structural, nonstructural, foundation, and geologic hazard issues. Lifelines such as lines for water, electricity, natural gas, and waste disposal beyond the perimeter of the building, which may be necessary for buildings to be occupied, are not considered in this document.

The procedures contained in this standard are specifically applicable to the evaluation and retrofit of existing buildings to ascertain compliance with a selected Performance Objective and, in general, are more appropriate for that purpose than are codes for new buildings. Codes for new construction are primarily intended to regulate the design and construction of new buildings; as such, they include many provisions that encourage or require the development of designs with features important for good seismic performance, including regular configuration, structural continuity, ductile detailing, and materials of appropriate quality. Many existing buildings were designed and constructed without these features and contain characteristics, such as unfavorable configuration and poor detailing, that preclude application of regulatory or building code provisions for their seismic evaluation or retrofit.

This standard is intended to be generally applicable to seismic evaluation and retrofit of all buildings regardless of importance, occupancy, historic status, or other classifications of use.

In addition to the direct effects of ground shaking, this standard also addresses, to a limited extent, other seismic hazards, such as liquefaction, slope failure, surface fault rupture, and effects of neighboring structures. Other earthquake-related phenomena, such as tsunami effects, are not considered.

Design of new buildings and evaluation of existing buildings and components for gravity and wind forces in the absence of earthquake demands are beyond the scope of this standard.

With careful extrapolation, the procedures of this standard may also be applied to many nonbuilding structures, such as pipe racks, steel storage racks, structural towers for tanks and vessels, piers, wharves, and electrical power generating facilities. However, the applicability of these procedures has not been fully examined for every type of structure—particularly those that have generally been covered by specialized codes or standards, such as bridges and nuclear power plants.

Techniques for repair of earthquake-damaged buildings are not included in this standard but are referenced in the commentary pertaining to Chapters 9 through 12 where such guidelines exist. Any combination of repaired components, undamaged existing components, and new components can be modeled

using this standard, and each can be checked against Performance Level acceptance criteria. If the mechanical properties of repaired components are known, acceptance criteria for use with this standard can be either deduced by comparison with other similar components or derived.

Application to Historic Buildings: This standard is intended to be applicable to all buildings, including designated historic buildings. Although the engineering principles for evaluating and retrofitting historic structures are similar to those for other buildings, the protections afforded historic buildings can raise additional issues that limit some of the actions that could be taken to evaluate and retrofit other buildings. Certain evaluation or retrofit tasks or techniques suitable or even preferred for a typical project might not be acceptable from a historic preservation perspective. These techniques might include the following:

- Condition assessment or material testing that would disturb historic elements,
- Potential architectural damage that might otherwise be found acceptable by an evaluation with a safety-based Performance Objective;
- Retrofit measures that involve removal of architectural components to gain access to the structure, and
- Retrofit measures that alter the look or configuration of the building.

Although the expected performance of architectural elements and finishes must be considered for all types of buildings, the interaction of architectural and structural elements in historic buildings often plays a more important role in the overall seismic performance of the structural system. Disturbance of historic architectural elements and finishes to allow testing during evaluation and to implement the resulting retrofit measures may be unacceptable. It is often necessary to evaluate historic buildings on a case-by-case basis and using general performance, rather than prescriptive, criteria.

There are national and often state and municipal registers of historic places, buildings, and districts (neighborhoods). Additionally for some programs, "eligibility" for the register is sufficient cause for special treatment. All U.S. states and territories have a designated state historic preservation officer, who should be consulted regarding these registers.

In addition, an appropriate level of performance for historic structures needs to be chosen that is acceptable to the authority having jurisdiction. Some people feel that historic buildings should meet the safety levels of other buildings because these levels are a subset of the general seismic safety needs. Others feel that historic structures, because of their value to society, should meet a higher level of performance. In other cases, a reduced level of performance has been allowed to avoid damaging historic fabric during retrofit. In other cases, a higher Performance Objective has been used to enhance postearthquake repairability of historic features.

Codes and policies regulating historic buildings have tried to balance a desire for improved seismic performance with a commitment to preservation. This standard's criteria, however, do not directly or explicitly address specific preservation objectives. Where historic preservation concerns would inform a project's seismic performance objective, this standard might therefore be inadequate if applied simply as written. In these cases, codes or policies that invoke this standard might prefer to use it as a guideline or to supplement it with criteria specific to historic buildings.

The following resources may be useful where evaluating historic structures:

- *Standards for the Treatment of Historic Properties* (Secretary of the Interior 1992);
- *Standards for the Treatment of Historic Properties with Guidelines for Preserving, Rehabilitating, Restoring, and Reconstructing Historic Buildings* (Secretary of the Interior 1995);
- National Park Service, Catalog of Historic Buildings Preservation Briefs (National Park Service 1995)
- *California Historical Building Code* (CBSC 2010b);
- 1998 *Proceedings on Disaster Management Programs for Historic Sites* (Secretary of the Interior 1998); and
- *Technical Preservation Services for Historic Buildings Sales Publication Catalog*, available online at www.cr.nps.gov/hps/tps/index.htm.

Intent of This Standard: It is expected that most buildings shown to be in compliance or retrofitted in accordance with this standard would perform within the desired levels when subjected to the selected earthquake(s). However, compliance with this standard does not guarantee such performance; rather, it represents the current standard of practice in designing to attain this performance. The practice of earthquake engineering is rapidly evolving, and both the understanding of the behavior of buildings subjected to strong earthquakes and the ability to predict this behavior are advancing. In the future, new knowledge and technology will improve the reliability of accomplishing these goals.

Featured in this standard are descriptions of damage states in relation to specific Performance Levels. These descriptions are intended to aid the authority having jurisdiction, design professionals, and owners in selecting appropriate Performance Levels for evaluation and retrofit design. They are not intended to be used for condition assessment of earthquake-damaged buildings. Although there may be similarities between these damage descriptions and those used for postearthquake damage assessment, many factors enter into the processes of assessing seismic performance. No single parameter in this standard should be cited as defining either a Performance Level or the safety or usefulness of an earthquake-damaged building.

Guidance for Programs, Ordinances, and Laws: This standard does not explicitly address the determination of whether or not an evaluation or retrofit project should be undertaken for a particular building. Guidance on the use of this standard in voluntary, mandatory, or code-triggered risk-mitigation programs is provided in Appendix B. Determining where these provisions should be required is beyond the scope of this standard. Once the decision to evaluate or retrofit a building has been made, this standard can be referenced for detailed engineering guidance on how to conduct a seismic analysis and design.

Coordinating with Codes for New Construction and Ordinances: Application of these provisions should be coordinated with other requirements that may be in effect, such as ordinances governing historic structures or hospital construction. Because codes for new buildings have chapters that briefly address existing buildings, care must be taken in coordinating and referencing the adoption of this standard to avoid ambiguity and confusion with other ordinances and codes.

Overarching Philosophical Approach: This standard is based on both experience-based judgment and academic research and component testing.

Experience-based judgment is largely derived from the observations of unretrofitted building performance in past earthquakes and to a much lesser extent, the observations of the performance of retrofitted buildings in earthquakes. In addition, experience from past evaluations and retrofits of existing buildings using

ASCE 31-03, ASCE 41-06, and practice before these earlier editions were published has also helped inform changes to this standard. Earthquake observations that have significantly influenced this standard have been from the following earthquakes: 1971 Sylmar (San Fernando, California), 1985 Michoacan (Mexico City), 1987 Whittier Narrows (southern California), 1989 Loma Prieta (San Francisco), 1994 Northridge (Los Angeles), 1995 Hyogo-ken Nanbu (Japan), 2001 Nisqually (Washington state), 2003 San Simeon (central California), 2010 Chile, 2010 and 2011 Christchurch (New Zealand), 2011 Great East Japan earthquake and tsunami, and many other less significant earthquakes. More information about these observations can be obtained from reconnaissance reports, such as those produced by the Earthquake Engineering Research Institute, the Japan Association for Earthquake Engineering, and the New Zealand Society for Earthquake Engineering. Though each earthquake may help validate or revise the fundamental assumptions underlying the procedures presented in ASCE 31-03 and ASCE 41-06, each may also offer new insights into the potential weaknesses in certain systems that should be considered. This knowledge was incorporated into this updated standard. Users of this standard are strongly encouraged to learn from past observations and participate in future efforts to document and interpret the performance of buildings. Tier 1 screening procedures in Chapter 4, deficiency-based procedures in Chapter 5, and nonstructural provisions in Chapter 13 rely most heavily on experience-based information and judgment.

Research data from partial and full-scale structural and nonstructural component testing, using shaking tables, quasistatic component testing, materials testing, and computer modeling, and their adaptation to the practice of seismic evaluation and retrofit are the second major source of information for this standard. References to such tests are provided in the Commentary, particularly in the Tier 3 analysis and materials chapters, 8 through 12 and 14.

1.2 DEFINITIONS AND NOTATIONS

1.2.1 Definitions Acceleration-Sensitive Component: A component that is sensitive to, and subject to, damage from inertial loading.

Acceptance Criteria: Limiting values of properties, such as drift, strength demand, and inelastic deformation, used to determine the acceptability of a component at a given Performance Level.

Action: An internal moment, shear, torque, axial force, deformation, displacement, or rotation corresponding to a displacement caused by a structural degree of freedom; designated as force- or deformation-controlled.

Active Fault: A fault for which there is an average historic slip rate of 1 mm per year or more and evidence of seismic activity within Holocene times (the past 11,000 years).

Adjusted Resistance: The reference resistance adjusted to include the effects of applicable adjustment factors resulting from end use and other modifying factors, excluding time-effect adjustments, which are considered separately and are not included.

Aspect Ratio: Ratio of full height to length for concrete and masonry shear walls; ratio of story height to length for wood shear walls; ratio of span to depth for horizontal diaphragms.

Assembly: Two or more interconnected components.

Authority Having Jurisdiction: The organization, political subdivision, office, or individual legally charged with responsibility for administering and enforcing the provisions of this standard.

Balloon Framing: Continuous stud framing from sill to roof, with intervening floor joists nailed to studs and supported by a let-in ribbon.

Base: The level at which the horizontal seismic ground motions are considered to be imparted to the structure.

Beam: A structural member whose primary function is to carry loads transverse to its longitudinal axis.

Bearing Wall: A wall that supports gravity loads of at least 200 lb/ft from floors or roofs.

Bed Joint: The horizontal layer of mortar on which a masonry unit is laid.

Benchmark Building: A building designed and constructed or evaluated to a specific performance level using an acceptable code or standard listed in Table 4-6.

Boundary Component: A structural component at the boundary of a shear wall or a diaphragm or at an edge of an opening in a shear wall or a diaphragm that possesses tensile or compressive strength to transfer lateral forces to the seismic-force-resisting system.

BPOE—Basic Performance Objective for Existing Buildings: A series of defined Performance Objectives based on a building's Risk Category meant for evaluation and retrofit of existing buildings; see Section 2.2.1 in Chapter 2.

BPON—Basic Performance Objective Equivalent to New Building Standards: A series of defined Performance Objectives based on a building's Risk Category meant for evaluation and retrofit of existing buildings to achieve a level of performance commensurate with the intended performance of buildings designed to a standard for new construction; see Section 2.2.4 in Chapter 2.

Braced Frame: A vertical seismic-force-resisting element consisting of vertical, horizontal, and diagonal components joined by concentric or eccentric connections.

BSE-1E: Basic Safety Earthquake-1 for use with the Basic Performance Objective for Existing Buildings, taken as a seismic hazard with a 20% probability of exceedance in 50 years, but not greater than the BSE-1N, at a site.

BSE-1N: Basic Safety Earthquake-1 for use with the Basic Performance Objective Equivalent to New Building Standards, taken as two-thirds of the BSE-2N at a site.

BSE-1X: Basic Safety Earthquake-1, either the BSE-1E or BSE-1N.

BSE-2E: Basic Safety Earthquake-2 for use with the Basic Performance Objective for Existing Buildings, taken as a seismic hazard with a 5% probability of exceedance in 50 years, but not greater than the BSE-2N, at a site.

BSE-2N: Basic Safety Earthquake-2 for use with the Basic Performance Objective Equivalent to New Building Standards, taken as the ground shaking based on the Risk-Targeted Maximum Considered Earthquake (MCE_R) per ASCE 7 at a site.

BSE-2X: Basic Safety Earthquake-2, either the BSE-2E or BSE-2N.

Building Performance Level: A limiting damage state for a building, considering structural and nonstructural components, used in the definition of Performance Objectives.

Building Type: A building classification defined in Section 3.2.1 (Table 3-1) that groups buildings with common seismic-force-resisting systems and performance characteristics in past earthquakes.

Capacity: The permissible strength or deformation for a component action.

Cast Iron: A hard, brittle, nonmalleable iron–carbon alloy containing 2.0% to 4.5% carbon. Shapes are obtained by reducing iron ore in a blast furnace, forming it into bars (or pigs), and remelting and casting it into its final form.

Cavity Wall: A masonry wall with an air space between wythes.

Checklist: Set of evaluation statements that shall be completed as part of the Tier 1 screening. Each statement represents a potential deficiency based on performance in past earthquakes.

Chord: See **Diaphragm Chord**.

Clay Tile Masonry: Masonry constructed with hollow units made of clay tile.

Clay-Unit Masonry: Masonry constructed with solid, cored, or hollow units made of clay; can be ungrouted or grouted.

Closed Stirrups or Ties: Transverse reinforcement defined in ACI 318 consisting of standard stirrups or ties with 90-degree hooks and lap splices in a pattern that encloses longitudinal reinforcement.

Code Official: The individual representing the authority having jurisdiction who is legally charged with responsibility for administering and enforcing the provisions of a legally adopted regulation, building code, or policy.

Collar Joint: Vertical longitudinal joint between wythes of masonry or between masonry wythe and backup construction; can be filled with mortar or grout.

Collector: See **Diaphragm Collector.**

Column (or Beam) Jacketing: A retrofit method in which a concrete column or beam is encased in a steel or concrete "jacket" to strengthen or repair the member by confining the concrete.

Common Building Type: One of the common building types listed and described in Table 3-1.

Component: A part of an architectural, mechanical, electrical, or structural system of a building.

Composite Masonry Wall: Multi-wythe masonry wall acting with composite action.

Composite Panel: A structural panel composed of thin wood strands or wafers bonded together with exterior adhesive.

Concentrically Braced Frame (CBF): Braced frame element in which component work-lines intersect at a single point or at multiple points such that the distance between intersecting work lines (or eccentricity) is less than or equal to the width of the smallest component connected at the joint.

Concrete Masonry: Masonry constructed with solid or hollow units made of concrete; can be ungrouted or grouted.

Condition of Service: The environment to which a structure is subjected.

Connection: A link that transmits actions from one component or element to another component or element, categorized by type of action (moment, shear, or axial).

Connection Hardware: Proprietary or custom-fabricated body of a component that is used to link wood components.

Connectors: Nails, screws, lags, bolts, split rings, shear plates, headed studs, and welds used to link components to other components.

Contents: Movable items within the building introduced by the owner or occupants.

Continuity Plates: Column stiffeners at the top and bottom of a panel zone.

Control Node: A node located at the center of mass at the roof of a building used in the nonlinear static procedure (NSP) to measure the effects of earthquake shaking on a building.

Coupling Beam: A component that ties or couples adjacent shear walls acting in the same plane.

Cripple Studs: Short studs between a header and top plate at openings in wall framing, or studs between the base and sill of an opening.

Cripple Wall: Short wall between the foundation and the first floor framing.

Critical Action: The component action that reaches its elastic limit at the lowest level of lateral deflection or loading of the structure.

Cross Tie: A component that spans the width of the diaphragm and delivers out-of-plane wall forces over the full depth of the diaphragm.

Cross Wall: A wood-framed wall sheathed with lumber, structural panels, or gypsum wallboard.

Decay: Decomposition of wood caused by action of wood-destroying fungi. The term "dry rot" is used interchangeably with decay.

Decking: Solid sawn lumber or glue-laminated decking, nominally 2 to 4 in. thick and 4 or more in. wide. Decking may be tongue-and-groove or connected at longitudinal joints with nails or metal clips.

Deep Foundation: Driven piles made of steel, concrete, or wood, cast-in-place concrete piers, or drilled shafts of concrete.

Deformability: The ratio of the ultimate deformation to the limit deformation.

Deformation-Controlled Action: An action that has an associated deformation that is allowed to exceed the yield value of the element being evaluated. The extent of permissible deformation beyond yield is based on component modification factors (m-factors).

Deformation-Sensitive Component: A component that is sensitive to deformation imposed by the drift or deformation of the structure, including deflection or deformation of diaphragms.

Demand: The amount of force or deformation imposed on an element or component.

Design Earthquake: A user-specified earthquake for the evaluation or retrofit of a building that has ground-shaking criteria described in Chapter 2.

Design Professional: The individual in responsible charge of the evaluation or retrofit design being performed using this standard.

Design Resistance (Force or Moment, as appropriate): Resistance provided by a member or connection; the product of adjusted resistance, the resistance factor, and the time-effect factor.

Diagonal Bracing: Inclined components designed to carry axial force, enabling a structural frame to act as a truss to resist lateral forces.

Diaphragm: A horizontal (or nearly horizontal) structural element, such as a floor or roof system, used to transfer inertial lateral forces to vertical elements of the seismic-force-resisting system.

Diaphragm Chord: A boundary component perpendicular to the applied force that is provided to resist tension or compression caused by the diaphragm moment.

Diaphragm Collector: A component parallel to the applied force that transfers lateral forces from the diaphragm of the structure to vertical elements of the seismic-force-resisting system.

Diaphragm Ratio: See **Aspect Ratio**.

Diaphragm Strut: See **Diaphragm Tie**.

Diaphragm Tie: A component parallel to the applied load that is provided to transfer wall anchorage or diaphragm inertial forces within the diaphragm. Also called diaphragm strut. See

Cross Tie, for case where **Diaphragm Tie** spans the entire diaphragm width.

Differential Compaction: An earthquake-induced process in which soils become more compact and settle in a nonuniform manner across a site.

Dimensioned Lumber: Lumber from nominal 2 through 4 in. thick and nominal 2 or more in. wide.

Displacement-Dependent Energy Dissipation Devices: Devices that have mechanical properties such that the force in the device is related to the relative displacement in the device.

Dowel-Type Fasteners: Bolts, lag screws, wood screws, nails, and spikes.

Drag Strut: See **Diaphragm Collector.**

Dressed Size: The dimensions of lumber after surfacing with a planing machine.

Drift: Horizontal deflection at the top of the story relative to the bottom of the story.

Dry Rot: See **Decay**.

Dry Service: Structures wherein the maximum equilibrium moisture content does not exceed 19%.

Eccentrically Braced Frame (EBF): Braced-frame element in which component work lines do not intersect at a single point and the distance between the intersecting work lines (or eccentricity) exceeds the width of the smallest component connecting at the joint.

Edge Distance: The distance from the edge of the member to the center of the nearest fastener.

Effective Damping: The value of equivalent viscous damping corresponding to the energy dissipated by the building, or element thereof, during a cycle of response.

Effective Stiffness: The value of the lateral force in the building, or an element thereof, divided by the corresponding lateral displacement.

Effective Void Ratio: Ratio of collar joint area without mortar to the total area of the collar joint.

Element: An assembly of structural components that act together in resisting forces, including gravity frames, moment-resisting frames, braced frames, shear walls, and diaphragms.

Energy Dissipation Device: Non-gravity-load-supporting element designed to dissipate energy in a stable manner during repeated cycles of earthquake demand.

Energy Dissipation System: Complete collection of all energy dissipation devices, their supporting framing, and connections.

Evaluation: An approved process or methodology of evaluating a building for a selected Performance Objective.

Expected Strength: The mean value of resistance of a component at the deformation level anticipated for a population of similar components, including consideration of the variability in material strength as well as strain-hardening and plastic section development.

Fair Condition: Masonry found during condition assessment to have mortar and units intact but with minor cracking.

Fault: Plane or zone along which earth materials on opposite sides have moved differentially in response to tectonic forces.

Flexible Component: A component, including its attachments, having a fundamental period greater than 0.06 s.

Flexible Connection: A link between components that permits rotational or translational movement without degradation of performance, including universal joints, bellows expansion joints, and flexible metal hose.

Flexible Diaphragm: A diaphragm with horizontal deformation along its length twice or more than twice the average story drift.

Force-Controlled Action: An action that is not allowed to exceed the nominal strength of the element being evaluated.

Foundation System: An assembly of structural components, located at the soil–structure interface, that transfers loads from the superstructure into the supporting soil.

Fundamental Period: The natural period of the building in the direction under consideration that has the greatest mass participation.

Gauge or Row Spacing: The center-to-center distance between fastener rows or gauge lines.

Global System: The primary components of a building that collectively resist seismic forces.

Glulam Beam: Shortened term for glue-laminated beam, which is a wood-based component made up of layers of wood bonded with adhesive.

Good Condition: Masonry found during condition assessment to have mortar and units intact and no visible cracking.

Grade: The classification of lumber with regard to strength and utility, in accordance with the grading rules of an approved agency.

Grading Rules: Systematic and standardized criteria for rating the quality of wood products.

Gypsum Wallboard or Drywall: An interior wall surface sheathing material; can sometimes be considered for resisting lateral forces.

Head Joint: Vertical mortar joint placed between masonry units in the same wythe.

Header Course: A course where the masonry units are oriented perpendicular to those in the course above or below to tie the wythes of the wall together, typically with the masonry unit long dimension perpendicular to the wall.

High-Deformability Component: A component whose deformability is not less than 3.5 when subjected to four fully reversed cycles at the limit deformation.

Hollow Masonry Unit: A masonry unit with net cross-sectional area in every plane parallel to the bearing surface less than 75% of the gross cross-sectional area in the same plane.

Hoops: Transverse reinforcement defined in Chapter 21 of ACI 318 consisting of closed ties with 135-degree hooks embedded into the core and no lap splices.

In-Plane Wall: See **Shear Wall**.

Infill: A panel of masonry placed within a steel or concrete frame. Panels separated from the surrounding frame by a gap are termed "isolated infills." Panels that are in full contact with a frame around its full perimeter are termed "shear infills."

Isolation Interface: The boundary between the upper portion of the structure (superstructure), which is isolated, and the lower portion of the structure, which is assumed to move rigidly with the ground.

Isolation System: The collection of structural components that includes all individual isolator units, all structural components that transfer force between components of the isolation system, and all connections to other structural components. The isolation system also includes the wind-restraint system, if such a system is used to meet the design requirements of this section.

Isolator Unit: A horizontally flexible and vertically stiff structural component of the isolation system that permits large lateral deformations under seismic load. An isolator unit shall be used either as part of or in addition to the weight-supporting system of the building.

Joint: An area where ends, surfaces, or edges of two or more components are attached; categorized by type of fastener or weld used and method of force transfer.

King Stud: Full-height studs adjacent to openings that provide out-of-plane stability to cripple studs at openings.

Knee Joint: A joint that in the direction of framing has one column and one beam.

Landslide: A downslope mass movement of earth resulting from any cause.

Level of Seismicity: A degree of expected seismic hazard. For this standard, levels are categorized as very low, low, moderate, or high, based on mapped acceleration values and site amplification factors, as defined in Section 2.5 (Table 2-5).

Light Framing: Repetitive framing with small, uniformly spaced members.

Lightweight Concrete: Structural concrete that has an air-dry unit weight not exceeding 115 lb/ft^3.

Limit Deformation: Two times the initial deformation that occurs at a load equal to 40% of the maximum strength.

Limited-Deformability Component: A component that is neither a low-deformability nor a high-deformability component.

Linear Dynamic Procedure (LDP): A Tier 2 or Tier 3 response-spectrum-based modal analysis procedure, the use of which is required where the distribution of lateral forces is expected to depart from that assumed for the linear static procedure.

Linear Static Procedure (LSP): A Tier 2 or Tier 3 lateral force analysis procedure using a pseudolateral force. This procedure is used for buildings for which the linear dynamic procedure is not required.

Link Beam: A component between points of eccentrically connected members in an eccentrically braced frame element.

Link Intermediate Web Stiffeners: Vertical web stiffeners placed within a link.

Link Rotation Angle: Angle of plastic rotation between the link and the beam outside of the link, derived using the specified base shear, V.

Liquefaction: An earthquake-induced process in which saturated, loose, granular soils lose shear strength and liquefy as a result of increase in pore-water pressure during earthquake shaking.

Load and Resistance Factor Design: A method of proportioning structural components (members, connectors, connections, and assemblages) using load factors and strength reduction factors such that no applicable limit state is exceeded when the structure is subjected to all design load combinations.

Load Duration: The period of continuous application of a given load, or the cumulative period of intermittent applications of load. See **Time-Effect Factor**.

Load Path: A path through which seismic forces are delivered from the point at which inertial forces are generated in the structure to the foundation and, ultimately, the supporting soil.

Load Sharing: The load redistribution mechanism among parallel components constrained to deflect together.

Load/Slip Constant: The ratio of the applied load to a connection and the resulting lateral deformation of the connection in the direction of the applied load.

Local Component: A specific element or connection in a building's global system.

Low-Deformability Component: A component whose deformability is 1.5 or less.

Lower-Bound Strength: The mean minus one standard deviation of the yield strengths, Q_y, for a population of similar components.

Lumber: The product of the sawmill and planing mill, usually not further manufactured other than by sawing, resawing, passing lengthwise through a standard planing machine, cross-cutting to length, and matching.

Masonry: The assemblage of masonry units, mortar, and possibly grout or reinforcement; classified with respect to the type of masonry unit, including clay-unit masonry, concrete masonry, or hollow-clay tile masonry.

Mat-Formed Panel: A structural panel manufactured in a mat-formed process including oriented strand board and waferboard.

Maximum Considered Earthquake, Risk-Targeted (MCE_R): An extreme seismic hazard level set forth in ASCE 7 and determined for the orientation that results in the largest maximum response to horizontal ground motions and with adjustments for a targeted risk.

Maximum Displacement: The maximum earthquake displacement of an isolation or energy dissipation system, or elements thereof, excluding additional displacement caused by accidental torsion.

Mean Return Period: The average period of time, in years, between the expected occurrences of an earthquake of specified severity.

Means of Egress: A path for exiting a building, including but not limited to doors, corridors, ramps, and stairways.

Moisture Content: The weight of the water in wood expressed as a percentage of the weight of the oven-dried wood.

Moment-Resisting Frame (MRF): A frame capable of resisting horizontal forces caused by the members (beams and columns) and joints resisting forces primarily by flexure.

Narrow Wood Shear Wall: Wood shear walls with an aspect ratio (height to width) greater than 2:1.

Nominal Size: The approximate rough-sawn commercial size by which lumber products are known and sold in the market. Actual rough-sawn sizes vary from nominal. Reference to standards or grade rules is required to determine nominal to actual finished size relationships, which have changed over time.

Nominal Strength: The capacity of a structure or component to resist the effects of loads, as determined by (1) computations using specified material strengths and dimensions, and formulas derived from accepted principles of structural mechanics; or (2) field tests or laboratory tests of scaled models, allowing for modeling effects and differences between laboratory and field conditions.

Nonbearing Wall: A wall that supports gravity loads less than 200 lb/ft.

Noncompact Member: A steel section that has width-to-thickness ratios exceeding the limiting values for compactness specified in AISC 360.

Noncomposite Masonry Wall: Multi-wythe masonry wall acting without composite action.

Nonstructural Component: An architectural, mechanical, or electrical component of a building that is permanently installed in, or is an integral part of, a building system.

Nonstructural Performance Level: A limiting damage state for nonstructural building components used to define Performance Objectives.

Normal Wall: A wall perpendicular to the direction of seismic forces.

Occupancy: The purpose for which a building, or part thereof, is used or intended to be used, designated in accordance with the governing regulation, building code, or policy.

Open Front: An exterior building wall plane on one side only, without vertical elements of the seismic-force-resisting system in one or more stories.

Ordinary Moment Frame: A moment frame system that meets the requirements for ordinary moment frames as

defined in seismic provisions for new construction in AISC 341, Chapter 9.

Oriented Strand Board: A structural panel composed of thin, elongated wood strands with surface layers arranged in the long panel direction and core layers arranged in the cross-panel direction.

Out-of-Plane Wall: A wall that resists lateral forces applied normal to its plane.

Overturning: Behavior that results when the moment produced at the base of vertical seismic-force-resisting elements is larger than the resistance provided by the building weight and the foundation resistance to uplift.

Owner: The individual(s) or entity having legal possession or rights to sanction evaluation or retrofit of a building.

P-Δ (P-Delta) Effect: The secondary effect of vertical loads and lateral deflection on the shears and moments in various components of a structure.

Panel: A sheet-type wood product.

Panel Rigidity or Stiffness: The in-plane shear rigidity of a panel; the product of panel thickness and modulus of rigidity.

Panel Shear: Shear stress acting through the panel thickness.

Panel Zone: Area of a column at a beam-to-column connection delineated by beam and column flanges.

Parapet: Portions of a wall extending above the roof diaphragm.

Partially Grouted Masonry Wall: A masonry wall containing grout in some of the cells.

Particleboard: A panel manufactured from small pieces of wood, hemp, and flax, bonded with synthetic or organic binders and pressed into flat sheets.

Perforated Wall or Perforated Infill Panel: A wall or panel not meeting the requirements for a solid wall or infill panel.

Performance Objective: One or more pairings of a selected Seismic Hazard Level with both an acceptable or desired Structural Performance Level and an acceptable or desired Nonstructural Performance Level.

Pier: Vertical portion of a wall between two horizontally adjacent openings. Piers resist axial stresses from gravity forces and bending moments from combined gravity and lateral forces.

Pitch or Spacing: The longitudinal center-to-center distance between any two consecutive holes or fasteners in a row.

Platform Framing: Construction method in which stud walls are constructed one floor at a time, with a floor or roof joist bearing on top of the wall framing at each level.

Ply: A single sheet of veneer, or several strips laid with adjoining edges that form one veneer lamina in a glued plywood panel.

Plywood: A structural panel composed of plies of wood veneer arranged in cross-aligned layers bonded with adhesive cured upon application of heat and pressure.

Pointing: The partial reconstruction of the bed joints of a masonry wall by removing unsound mortar and replacing it with new mortar.

Pole: A round timber of any size or length, usually used with the larger end in the ground.

Pole Structure: A structure framed with generally round, continuous poles that provide the primary vertical frame and lateral-load-resisting system.

Poor Condition: Masonry found during condition assessment to have degraded mortar, degraded masonry units, or significant cracking.

Pounding: The action of two adjacent buildings coming into contact with each other during earthquake excitation as a result of their close proximity and differences in dynamic response characteristics.

Preservative: A chemical that, when suitably applied to wood, makes the wood resistant to attack by fungi, insects, marine borers, or weather conditions.

Pressure-Preservative-Treated Wood: Wood products pressure-treated by an approved process and preservative.

Primary Component: An element that is required to resist the seismic forces and accommodate seismic deformations for the structure to achieve the selected performance level.

Primary (Strong) Panel Axis: The direction that coincides with the length of the panel.

Probability of Exceedance: The chance, expressed as a percentage (%), that a more severe event will occur within a specified period, expressed in number of years.

Pseudo Seismic Force (V): The calculated lateral force used for the Tier 1 Quick Checks and for the Tier 2 Linear Static Procedure. The pseudo lateral force represents the force required, in a linear analysis, to impose the expected actual deformation of the structure in its yielded state where subjected to the design earthquake motions.

Punched Metal Plate: A light steel plate fastener with punched teeth of various shapes and configurations that are pressed into wood members to effect force transfer.

Quick Check: Analysis procedure used in Tier 1 screenings to determine if the seismic-force-resisting system has sufficient strength or stiffness.

Redundancy: The quality of having alternative load paths in a structure by which lateral forces can be transferred, allowing the structure to remain stable following the failure of any single element.

Reentrant Corner: Plan irregularity in a diaphragm, such as an extending wing, plan inset, or E-, T-, X-, or L-shaped configuration, where large tensile and compressive forces can develop.

Reinforced Masonry: Masonry with the following minimum amounts of vertical and horizontal reinforcement: vertical reinforcement of at least 0.20 in.^{2} in cross-section at each corner or end, at each side of each opening, and at a maximum spacing of 4 ft throughout. Horizontal reinforcement of at least 0.20 in.^{2} in cross-section at the top of the wall, at the top and bottom of wall openings, at structurally connected roof and floor openings, and at a maximum spacing of 10 ft.

Repointing: A method of repairing cracked or deteriorating mortar joints in which the damaged or deteriorated mortar is removed and the joints are refilled with new mortar.

Required Member Resistance (or Required Strength): Action on a component or connection, determined by structural analysis, resulting from the factored loads and the critical load combinations.

Resistance: The capacity of a structure, component, or connection to resist the effects of loads.

Resistance Factor: A reduction factor applied to member resistance that accounts for unavoidable deviations of the actual strength from the nominal value and for the manner and consequences of failure.

Retrofit: Improving the seismic performance of structural or nonstructural components of a building.

Retrofit Measures: Modifications to existing components, or installation of new components, that correct deficiencies identified in a seismic evaluation as part of a scheme to rehabilitate a building to achieve a selected Performance Objective.

Retrofit Method: One or more procedures and strategies for improving the seismic performance of existing buildings.

Retrofit Strategy: A technical approach for developing rehabilitation measures for a building to improve seismic performance.

Rigid Component: A component, including attachments, having a fundamental period less than or equal to 0.06 s.

Rigid Diaphragm: A diaphragm with horizontal deformation along its length less than half the average story drift.

Risk Category: A categorization of a building for determination of earthquake performance based on the governing regulation, building code, or policy or in lieu of an applicable regulation, building code, or policy, ASCE 7.

Rough Lumber: Lumber as it comes from the saw before any dressing operation.

Row of Fasteners: Two or more fasteners aligned with the direction of load.

Running Bond: A pattern of masonry where the head joints are staggered between adjacent courses by at least one-quarter of the length of a masonry unit.

Scragging: The process of subjecting an elastomeric bearing to one or more cycles of large-amplitude displacement.

Seasoned Lumber: Lumber that has been dried either by open-air drying within the limits of moisture content attainable by this method, or by controlled air drying.

Secondary Component: An element that accommodates seismic deformations but is not required to resist the seismic forces it may attract for the structure to achieve the selected performance level.

Seismic-Force-Resisting System: Those elements of the structure that provide its basic strength and stiffness to resist seismic forces.

Seismic Hazard Level: Ground-shaking demands of specified severity, developed on either a probabilistic or deterministic basis.

Shallow Foundation: Isolated or continuous spread footings or mats.

Shear Wall: A wall that resists lateral forces applied parallel with its plane; also known as an **In-Plane Wall**.

Sheathing: Lumber or panel products that are attached to parallel framing members, typically forming wall, floor, ceiling, or roof surfaces.

Short Captive Column: A column with a height-to-depth ratio less than 75% of the nominal height-to-depth ratios of the typical columns at that level.

Shrinkage: Reduction in the dimensions of wood caused by a decrease of moisture content.

Site Class: A classification assigned to a site based on the types of soils present and their engineering properties, as defined in Section 2.4.1.6.1.

Slip-Critical Joint: A bolted joint in which slip resistance of the connection is required.

Solid Masonry Unit: A masonry unit with net cross-sectional area in every plane parallel to the bearing surface equal to 75% or more of the gross cross-sectional area in the same plane.

Solid Wall or Solid Infill Panel: A wall or infill panel with openings not exceeding 5% of the wall surface area. The maximum length or height of an opening in a solid wall must not exceed 10% of the wall width or story height. Openings in a solid wall or infill panel must be located within the middle 50% of a wall length and story height and must not be contiguous with adjacent openings.

Special Moment Frame (SMF): A moment frame system that meets the special requirements for frames as defined in seismic provisions for new construction.

Stack Bond: A placement of masonry units such that the head joints in successive courses are aligned vertically.

Stiff Diaphragm: A diaphragm that is neither flexible nor rigid.

Storage Racks: Industrial pallet racks, movable shelf racks, and stacker racks made of cold-formed or hot-rolled structural members; does not include other types of racks, such as drive-in and drive-through racks, cantilever wall-hung racks, portable racks, or racks made of materials other than steel.

Story: The portion of a structure between the tops of two successive finished floor surfaces and, for the topmost story, from the top of the floor finish to the top of the roof structural element.

Story Shear Force: Portion of the pseudo lateral force carried by each story of the building.

Strength: The maximum axial force, shear force, or moment that can be resisted by a component.

Stress Resultant: The net axial force, shear, or bending moment imposed on a cross-section of a structural component.

Strong-Back System: A secondary system, such as a frame, commonly used to provide out-of-plane support for an unreinforced or underreinforced masonry wall.

Strong Column–Weak Beam: A connection where the capacity of the column in any moment frame joint is greater than that of the beams, ensuring inelastic action in the beams.

Structural Component: A component of a building that provides gravity- or lateral-load resistance as part of a continuous load path to the foundation, including beams, columns, slabs, braces, walls, wall piers, coupling beams, and connections; designated as primary or secondary.

Structural Performance Level: A limiting structural damage state; used in the definition of Performance Objectives.

Structural Performance Range: A range of structural damage states; used in the definition of Performance Objectives.

Structural System: An assemblage of structural components that are joined together to provide regular interaction or interdependence.

Stud: Vertical framing member in interior or exterior walls of a building.

Subassembly: A portion of an assembly.

Subdiaphragm: A portion of a larger diaphragm used to distribute loads between diaphragm ties, struts, or cross ties.

Superstructure: In a building with a seismic isolation system, the portion of the structure above the isolation system.

Target Displacement: An estimate of the maximum expected displacement of the roof of a building calculated for the design earthquake.

Tie: See **Diaphragm Tie**.

Tie-Down: A device used to resist uplift of the chords of light-framed shear walls.

Tie-Down System: For seismically isolated structures, the collection of structural connections, components, and elements that provide restraint against uplift of the structure above the isolation system.

Tier 1 Screening: Completion of checklists of evaluation statements that identifies potential deficiencies in a building based on performance of similar buildings in past earthquakes.

Tier 2 Evaluation: An approach applicable to certain types of buildings and Performance Objectives based on specific evaluation of potential deficiencies to determine if they represent actual deficiencies that may require mitigation. Analysis of the response of the entire building may not be required.

Tier 2 Retrofit: The mitigation of deficiencies identified in the Tier 1 screening.

Tier 3 Evaluation: An approach to evaluation in which complete analysis of the response of the building to seismic hazards is performed, implicitly or explicitly recognizing nonlinear response.

Tier 3 Retrofit: An approach to retrofitting in which complete analysis of the response of the building to seismic hazards is performed, implicitly or explicitly recognizing nonlinear response.

Timber: Lumber of nominal cross-section dimensions of 5 in. or more.

Time-Effect Factor: A factor applied to adjusted resistance to account for effects of duration of load. (See **Load Duration**.)

Total Design Displacement: The design earthquake displacement of an isolation or energy dissipation system, or components thereof, including additional displacement caused by actual and accidental torsion.

Total Maximum Displacement: The maximum earthquake displacement of an isolation or energy dissipation system, or components thereof, including additional displacement caused by actual and accidental torsion.

Transverse Wall: A wall that is oriented transverse to in-plane shear walls and resists lateral forces applied normal to its plane; also known as an out-of-plane wall.

Ultimate Deformation: The deformation at the point where gravity load support cannot be maintained.

Unreinforced Masonry (URM) Bearing Wall: An unreinforced masonry wall that provides vertical support for a floor or roof for which the total superimposed vertical load exceeds 100 lb/ft of wall.

Unreinforced Masonry (URM) Wall: A masonry wall containing less than the minimum amounts of reinforcement as defined for reinforced masonry walls; assumed to resist gravity and lateral loads solely through resistance of the masonry materials.

V-Braced Frame: A concentrically braced frame (CBF) in which a pair of diagonal braces located either above or below a beam is connected to a single point within the clear beam span.

Velocity-Dependent Energy Dissipation Devices: Devices that have mechanical characteristics such that the force in the device is dependent on the relative velocity in the device.

Veneer: A masonry wythe that provides the exterior finish of a wall system and transfers out-of-plane load directly to a backing but is not considered to add load-resisting capacity to the wall system.

Vertical Irregularity: A discontinuity of strength, stiffness, geometry, or mass in one story with respect to adjacent stories.

Waferboard: A non-veneered structural panel manufactured from 2- to 3-in. flakes or wafers bonded together with a phenolic resin and pressed into sheet panels.

Wall Pier: Vertical portion of a wall between two horizontally adjacent openings.

Wind-Restraint System: The collection of structural components that provides restraint of the seismic-isolated structure for wind loads; may be either an integral part of isolator units or a separate device.

Wood Structural Panel: A wood-based panel product bonded with an exterior adhesive, meeting the requirements of NIST PS 1-95 or PS 2-92, including plywood, oriented-strand board, waferboard, and composite panels.

Wrought Iron: An easily welded or forged iron containing little or no carbon. Initially malleable, it hardens quickly when rapidly cooled.

Wythe: A continuous vertical section of a wall, one masonry unit in thickness.

X-Braced Frame: A concentrically braced frame in which a pair of diagonal braces crosses near the midlength of the braces.

Y-Braced Frame: An eccentrically braced frame (EBF) in which the stem of the Y is the link of the EBF system.

Yield Story Drift: The lateral displacement of one level relative to the level above or below at which yield stress is first developed in a frame member.

1.2.2 Notations

A	Cross-sectional area of a pile, Eq. (8-13)
	Cross-sectional area of shear wall boundary members or diaphragm chords, in.^{2}, Eqs. (12-2), (12-4), (12-5)
	Bonded rubber area of a lead-rubber bearing, Eqs. (C14-5), (C14-8), and (C14-9)
A_b	Gross area of bolt or rivet, Eqs. (9-18), (9-22), and (9-24)
	Sum of net mortared area of bed joints above and below the test unit, Eqs. (11-1) and (15-1)
A_{base}	Area of foundation footprint if the foundation components are interconnected laterally, Eqs. (8-18) and (8-28)
A_{br}	Average cross-sectional area of the diagonal brace, Eq. (4-10)
A_c	Area of column, Eq. (9-8)
	Summation of the cross-sectional area of all columns in the story under consideration, Eq. (4-8)
	Critical contact area of a footing required to support vertical loads, Sec. 8.4.2.3.1 and Table 8-3
A_{col}	Area of the end column in a frame, Eq. (4-12)
A_{cv}	Area of a reinforced concrete shear wall resisting shear, Section C10.7.2.3
A_e	Effective net area of the horizontal leg, Eq. (9-20)
A_f	Actual area of the footing, Chapter 8
A_g	Gross area of column, in.^{2}, Eqs. (9-2), (9-4), and (10-3)
	Gross area of the horizontal leg, Eq. (9-19)
	Gross area of cast iron column, Eq. (9-36)
	Gross area of column, Eq. (10-3)
A_j	Effective cross-sectional area of a beam–column joint, in a plane parallel to the plane of reinforcement generating shear in the joint, Eq. (10-4)
A_n	Area of net mortared or grouted section of a wall or wall pier, Chapters 11 and 15
A_{ni}	Area of net mortared and/or grouted section of masonry infill, Eq. (11-19)
A_{op}	Area of opening in a masonry infill wall, Eq. (11-18)
A_p	Area of wall tributary to the connection, Eq. (4-13)
	Gross area of prestressed concrete elements, Eq. (4-14)
	Lead plug area in a lead-rubber bearing, Eq. (C14-1)
A_r	Area of bonded rubber in a lead-rubber bearing, Eq. (C14-2)
A_{rect}	Area of the smallest rectangle that covers the footing footprint, Fig. 8-3 and Table 8-3
A_s	Area of nonprestressed tension reinforcement, in.^{2}, Chapters 10 and 11
A_s'	Area of compression reinforcement, in.^{2}, Chapter 10
A_v	Area of shear reinforcement, Chapter 10
	Shear area of masonry wall pier, Eqs. (C11-1) and (C11-2)
A_w	Summation of the net horizontal cross-sectional area for concrete and masonry wall or length for wood of all shear walls in the direction of loading, Eq. (4-9)
	Nominal area of the web, Eq. (9-7)
	Area of link web, Eqs. (9-28) and (9-31)

Area of the web cross section, $= b_w d$, Chapter 10
Area of infill wall, Eq. (11-16)

A_{Wtot} Total area of a frame bay infilled with masonry, including openings in the infill wall, Eq. (11-18)

A_x Accidental torsion amplification factor, Eq. (7-4)
Story acceleration at level x, Eq. (13-6)

B Width of footing, typically taken as the dimension perpendicular to the direction of seismic force unless noted otherwise, Section 8.4

B_1 Damping coefficient used to adjust spectral response for the effect of viscous damping, Eq. (2-11)

B_{bsa} Bessel function used to compute base slab averaging effects, Eqs. (8-15) and (8-16)

B_{D1} Numerical damping coefficient equal to the value of B_1, as determined in Section 2.4.1.7.1, for an effective damping ratio β_D, Eq. (14-4)

B_{M1} Numerical damping coefficient taken equal to the value of B_1, as determined in Section 2.4.1.7.1, for an effective damping ratio β_M, Eq. (14-6)

B_f Width of footing, typically taken as the dimension perpendicular to the direction of seismic force unless noted otherwise, Chapter 8

C Modification factor to relate expected maximum inelastic displacements calculated for linear elastic response, Section 4.5.2.1
Compliant, per Chapter 16 Checklists
Damping coefficient for an energy dissipation device or device j, Chapter 14

C_0 Modification factor to relate spectral displacement of an equivalent single-degree-of-freedom (SDOF) system to the roof displacement of the building multi-degree-of-freedom (MDOF) system, Eqs. (7-28) and (C7-4)
Damping coefficient for fluid viscoelastic device, Eq. (14-30)

C_1 Modification factor to relate expected maximum inelastic displacements to displacements calculated for linear elastic response, Chapter 7

C_2 Modification factor to represent the effects of pinched hysteresis shape, cyclic stiffness degradation and strength deterioration on the maximum displacement response, Chapter 7

C_b Coefficient to account for effect of nonuniform moment given in AISC 360, Chapter 9

CF_i Stage combination factors for use with velocity-dependent energy dissipation devices, Eqs. (14-36) and (14-37)

C_m Effective mass factor to account for higher modal mass participation effects, Chapter 7

C_p Horizontal force factor, Eq. (15-11) and Table 15-3

C_t Numerical value for adjustment of period T, Eqs. (4-5) and (7-18)

C_v Coefficient of variation, defined as the standard deviation divided by the mean

C_{vx} Vertical distribution factor, based on story weights and heights for the pseudo seismic force, Eqs. (7-24) and (7-25)

C1 Concrete Moment Frames building type, as defined in Table 3-1

C2 Concrete Shear Wall with Stiff Diaphragms building type, as defined in Table 3-1

C2a Concrete Shear Wall with Flexible Diaphragms building type, as defined in Table 3-1

C3 Concrete Frames with Infill Masonry Shear Walls with Stiff Diaphragms building type, as defined in Table 3-1

C3a Concrete Frames with Infill Masonry Shear Walls with Flexible Diaphragms building type, as defined in Table 3-1

D Generalized deformation metric
Depth of the soil-foundation interface with respect to the ground surface, Section 8.4
Constant representing the flexibility of a plate, Eqs. (C8-2) and (C8-3)
In-plane width dimension of masonry, Chapter 11
Response displacement of an isolator unit, Chapter 14
Relative displacement between two ends of an energy dissipation device, Chapter 14
Depth of diaphragm, Chapter 15

D^- Maximum negative displacement of an energy dissipation device, Eqs. (14-26) and (14-28)

D^+ Maximum positive displacement of an energy dissipation device, Eqs. (14-26) and (14-28)

$\dot{D}$ Sliding velocity of a sliding isolator unit, Eq. (C14-12)
Relative velocity between two ends of an energy dissipation device, Eqs. (14-27) and (14-30)

D_{ave} Average displacement of an energy dissipation device, equal to $(|D^+| + |D^-|)/2$, Eq. (14-29)

D_{clear} Required clearance between a glass component and the frame, Eq. (11-9)

D_f Depth to the foundation-soil interface, Section 8.4

DCR Demand-capacity ratio, computed in accordance with Eq. (7-16)

$\overline{\text{DCR}}$ Average demand-capacity ratio for elements in a story, computed in accordance with Eq. (7-17)

DCR_i Demand-capacity ratio for element i in accordance with Eq. (7-17)

DCR_{max} Largest demand-capacity ratio for any primary component of a building in the direction under consideration, Section C7.4.1.3.1

D_D Design displacement, at the center of rigidity of the isolation system in the direction under consideration, Eqs. (14-4), (14-19), and (14-21)

D'_D Design earthquake target displacement at a control node located at the center of mass of the first floor above the isolation system in the direction under consideration, Eq. (14-15)

D_M Maximum displacement at the center of rigidity of the isolation system in the direction under consideration, Eqs. (14-6), (14-20) and (14-22)

D'_M BSE-2 target displacement at a control node located at the center of mass of the first floor above the isolation system in the direction under consideration, Eq. (14-16)

D_p Relative seismic displacement that the component must be designed to accommodate, Eqs. (13-9), (13-10), (13-12), and (13-13)

D_r Quick check drift ratio for moment frames, Eq. (4-7)
Drift ratio for nonstructural components, Eq. (13-8)

D_{TD} Total design displacement of a component of the isolation system, including both translational displacement at the center of rigidity and the component of torsional displacement in the direction under consideration, Eq. (14-8)

D_{TM} Total maximum displacement of a component of the isolation system, including both translational displacement at the center of rigidity and the component of torsional displacement in the direction under consideration, as specified by Eq. (14-9)

D_y Yield displacement of a lead-rubber bearing, Eqs. (C14-3), (C14-4), (C14-6), (C14-7)

$\ddot{D}_v$ Vertical ground acceleration, Eq. (C14-13)

E Young's modulus of elasticity

E_c Modulus of elasticity of concrete, Chapter 10

Compression modulus of an elastomeric bearing, Eqs. (C14-9) and (C14-10)

E_{fe} Expected elastic modulus of frame material, Chapter 11

E_{loop} Energy dissipated, in an isolator unit during a full cycle of reversible load over a test displacement range from Δ^+ to Δ^-, as measured by the area enclosed by the loop of the force–deflection curve, Eq. (14-18)

E_m Modulus of elasticity of masonry, Chapter 11

E_{me} Expected elastic modulus of masonry in compression, Chapter 11

E_s Modulus of elasticity of reinforcement, lb/in.^{2}, Chapter 10

F Restoring force of an isolator, Eq. (14-3)

Force in an energy dissipation device, Eqs. (14-25), (14-27), and (14-30)

F^- Negative force in an isolator or energy dissipation device during a single cycle of prototype testing at a displacement amplitude of Δ^-, Eqs. (14-17), (C14-17), (14-26), (14-28), and (14-43)

F^+ Positive force in an isolator or energy dissipation device during a single cycle of prototype testing at a displacement amplitude of Δ^+, Eqs. (14-17), (C14-17), (14-26), (14-28), and (14-43)

F_1 Pseudo-seismic force applied at the isolation base level, Eq. (14-12)

F_a Factor to adjust spectral acceleration in the short-period range for site class, per Table 2-3

F_{cr} Allowable axial buckling stress, Eq. (9-36)

F_d Total inertial force on a flexible diaphragm, Eq. (C7-1)

F_i Lateral pseudo-seismic force at level i, Eqs. (4-3a), (7-25), (C7-2), and (14-32)

F_{mc} The bearing (compressive) strength of the infill, Eq. (C11-3)

F_{mi} The mth mode horizontal inertia force at level i, Eq. (14-39)

$F_{p'}$ Axial tensile force for the evaluation or retrofit of ties between the diaphragm and chords or boundaries, Eq. (7-7)

Horizontal seismic force for design of a structural or nonstructural component and its connection to the structure, Eq. (7-8)

Horizontal seismic force for anchorage of a wall to a diaphragm, Eq. (7-9)

Out-of-plane force per unit area for evaluation or retrofit of a wall spanning between two out-of-plane supports, Eqs. (7-13) and (7-14)

Component seismic design force applied horizontally at the center of gravity of the component or distributed according to the mass distribution of the component, Chapter 13

F_{pe} Effective prestressing force of a prestressing tendon

$F_{p,min}$ Minimum horizontal seismic force for anchorage of a wall to a diaphragm, Eq. (7-10)

Minimum out-of-plane force per unit area for evaluation or retrofit of a wall spanning between two out-of-plane supports, Eqs. (7-13) and (7-14)

F_{pv} Component seismic design force applied vertically at the center of gravity of the component or distributed according to the mass distribution of the component, Eq. (13-7)

F_{px} Diaphragm inertial force at floor level x, Eq. (7-26)

F_{te} Expected tensile strength, Eqs. (9-20), (9-22), and (9-24)

F_v Factor to adjust spectral acceleration at 1 s for site class, per Table 2-4

Design shear strength of bolts or rivets, Chapter 9

F_{ve} Unfactored nominal shear strength of bolts or rivets given in AISC 360, Eq. (9-18)

F_x Pseudo-seismic force applied at floor level x, Chapters 4, 7, and 14

F_{wx} Force applied to a wall at level x

F_y Specified minimum yield stress for the type of steel being used, Chapters 9 and 16

Yield force of a lead-rubber bearing, Eq. (C14-4)

F_{yb} F_y of a beam, Chapter 9, F_{yc} and F_y of a column, Chapter 9

F_{ye} Expected yield strength, Chapter 9

F_{yf} F_y of a flange, Chapter 9

F_{yLB} Lower-bound yield strength, Chapter 9

G Soil shear modulus

Modulus of rigidity of wood structural panels, lb/in.^{2}, Eqs. (12-2), (12-4), and (12-5)

G_0 Initial or maximum soil shear modulus, Eqs. (8-4), (8-5), (8-6), (8-7), and (8-12)

G_d Shear stiffness of shear wall or diaphragm assembly, Eqs. (12-1) and (12-3) and Tables 12-1 and 12-2

G_{eff} Effective shear modulus of a lead-rubber bearing, Eqs. (C14-8) and (C14-10)

G_m Shear modulus of masonry, Chapter 11

G_{me} Expected shear modulus of masonry, Chapter 11

H Horizontal load on footing, Chapter 4

Least clear height of opening on either side of pier, Chapter 15

H_{rw} Height of the retaining wall, Eq. (8-30)

I Moment of inertia

I_b Moment of inertia of a beam, Eqs. (9-1) and (9-17)

I_c Moment of inertia of a column, Eq. (9-2)

I_{ce} Equivalent moment of inertia of transformed concrete column section, Eq. (11-15)

I_f Moment of inertia of most flexible frame member confining infill panel, Chapter 11

I_g Moment of inertia of gross concrete or masonry section about centroidal axis, neglecting reinforcement, Chapters 10 and 11

IO Immediate Occupancy Performance Level

I_p Component performance factor; 1.0 shall be used for the Life Safety and Position Retention Nonstructural Performance Levels and 1.5 shall be used for the Operational Nonstructural Performance Level, Eqs. (13-1), (13-2), (13-3), and (13-5)

J Force-delivery reduction factor. A coefficient used in linear procedures to estimate the actual forces delivered to force-controlled components by other (yielding) components, Sec. 7.5.2.1.2

K Length factor for brace; defined in AISC 360, Chapter 9
Bulk modulus of an elastomeric bearing, Eq. (C14-10)
K' Storage stiffness of a solid viscoelastic device, Eq. (14-28)
K'' Loss stiffness of a solid viscoelastic device, Eq. (14-29)
K_α Sloping ground correction factor, Section C8.2.2.2
K_θ Rotational stiffness of a partially restrained connection, Eqs. (9-15), (9-16), and (9-17)
Effective rotational stiffness of the foundation, Eq. (8-24)
K_σ Overburden correction factor, Section C8.2.2.2
K^*_{fixed} Effective fixed-base stiffness of the structure, Eq. (8-25)
K_b Flexural stiffness, Eqs. (9-27) and (9-29)
K_D Effective stiffness of the isolation system at the design displacement in the horizontal direction under consideration, Eqs. (14-5), (14-19), and (14-21)
K_E Format conversion factor for calculating LRFD reference resistance based on allowable stress factor, Section C8.3.2.5
K_e Effective stiffness of the building in the direction under consideration, for use with the NSP, Sec. 7.4.3.2.4
Elastic stiffness of a link beam, Eqs. (9-27) and (9-30)
K_{fl} Flexural stiffness of the equivalent composite cantilever column, Eqs. (11-14) and (11-15)
K_i Elastic stiffness of the building in the direction under consideration, for use with the NSP, Eq. (7-27)
K_{ini} Initial in-plane stiffness of an uncracked infilled frame with unreinforced masonry infill panel that has an opening in it, Eq. (11-18)
K^{solid}_{ini} Initial in-plane stiffness of an uncracked infilled frame with solid unreinforced masonry infill panel, Eq. (11-14)
K_M Effective stiffness of the isolation system at the maximum displacement in the horizontal direction under consideration, Eqs. (14-7), (14-20), and (14-22)
K_p Approximate stiffness of the support system of the component, its bracing, and its attachment, determined in terms of load per unit deflection at the center of gravity of the component, Eq. (13-4)
K_s Shear stiffness, Eqs. (9-27) and (9-28)
K_{sh} Horizontal spring stiffness, Chapter 4
K_{shl} Shear stiffness of the equivalent composite cantilever column, Eq. (11-14)
K_{UB} Maximum effective stiffness of the isolation system based on upper-bound isolator stiffness properties in the horizontal direction under consideration, Eq. (14-7)
K_W Global stiffness of steel plate shear wall, Eqs. (9-33) and (9-35)
K_x Effective translational stiffness of the foundation, Eq. (8-27)
L Total length of a frame, Eq. (4-12)
Length of pile in vertical dimension, Eq. (8-13)
Length of beam, center-to-center of columns, Chapter 9
Length of member along which deformations are assumed to occur, Chapter 10
Length of wall or wall pier, Chapter 11
Diaphragm span, distance between shear walls or collectors, Eqs. (12-3), (12-4), and (12-5)
L_b Length or span of beam, Eqs. (9-6) and (9-17)
Distance between points braced against lateral displacement of the compression flange or between points braced to prevent twist of the cross-sections; given in AISC 360, Chapter 9
L_{br} Average length of the diagonal brace, Eq. (4-10)
L_c Length of beam, clear span between columns, Chapter 9
L_c Length of cross wall
Length critical contact area equal to A_c/b, Sec. 8.4.2.3.1 and Table 8-3
L_d Distance between lateral supports for a diaphragm, Eq. (C7-1)
L_f Span, in feet, of a flexible diaphragm that provides lateral support for a wall, the span is between vertical primary seismic-force-resisting elements that provide lateral support to the flexible diaphragm in the direction considered, Eq. (7-11)
Length of footing in plan dimension, Section 8.4
$\boldsymbol{L_i}$ Effective span for an open-front building
L_{inf} Length of infill panel, Tables 11-8 and 11-9 and Fig. C11-6
L_p The limiting unbraced length between points of lateral restraint for the full plastic moment capacity to be effective; given in AISC 360 Eqs. (9-6) and (9-9)
L_r The limiting unbraced length between points of lateral support beyond which elastic lateral torsional buckling of the beam is the failure mode; given in AISC 360, Eq. (9-9)
LS Life Safety Performance Level
M Design moment at a section, Eq. (10-3)
[M] Diagonal mass matrix, Eq. (C7-4)
M^* Effective mass for the first mode, Eqs. (8-25) and (8-26)
M_c Expected ultimate moment capacity of footing, Eq. (8-8)
MCE_R Risk-Targeted Maximum Considered Earthquake per ASCE 7
M_{CE} Expected flexural strength of a member or joint, Eqs. (9-3), (9-4), (9-6), (9-15), (9-16), (9-18), (9-22), (9-24), (9-25), (9-26), and (9-32)
M_{CEx} Expected bending strength of a member about the x-axis, Eqs. (9-10), (9-11), (9-13), and (10-1)
M_{CEy} Expected bending strength of a member about y-axis, Eqs. (9-10), (9-11), (9-13), and (10-1)
M_{CLx} Lower-bound flexural strength of the member about the x-axis, Eq. (9-12)
M_{CLy} Lower-bound flexural strength of the member about the y-axis, Eq. (9-12)
M_{gCS} Moment acting on the slab column strip, Chapter 10
M_{gj} Moment in girder at level j, Eq. (4-11)
M_n Nominal moment strength at section, Chapters 9 and 10
M_{nb} Nominal moment strength at beam section, Chapter 10
M_{nc} Nominal moment strength at column section, Chapter 10
M_{nCS} Nominal moment strength of the slab column strip, Chapter 10

M_{OT} Total overturning moment induced on the element by seismic forces applied at and above the level under consideration, Eqs. (7-5) and (7-6)

M_p Plastic moment capacity determined in accordance with AISC 360, Eq. (9-9)

M_{pCE} Expected plastic moment capacity, Eq. (9-6)

M_r Limiting buckling moment determined in accordance with AISC 360, Eq. (9-9)

M_S Tier 1 system modification factor, Chapter 4

M_{ST} Stabilizing moment produced by dead loads acting on the element, Eqs. (7-5) and (7-6)

M_{UD} Design moment, Chapter 10

M_{UDx} Design bending moment about the x-axis for axial load P_{UF}, kip-in., Eq. (10-1)

M_{UDy} Design bending moment about the y-axis for axial load P_{UF}, kip-in., Eq. (10-1)

M_{UFx} Bending moment in the member about the x-axis, calculated in accordance with Section 7.5.2.1.2, Eq. (9-12)

M_{UFy} Bending moment in the member about the y-axis, calculated in accordance with Section 7.5.2.1.2, Eq. (9-12)

M_x Bending moment in a member for the x-axis, Eqs. (9-10), (9-11), and (9-13)

M_y Bending moment in a member for the y-axis, Eqs. (9-10), (9-11), and (9-13)

Yield moment strength at section, Eq. (10-5)

N Standard Penetration Test blow count in soil, Section 2.4.1.6.1

Number of piles in a pile group, Eq. (8-13)

Normal load on the bearing of a sliding isolator, Eq. (C14-12)

$\overline{N}$ Average Standard Penetration Test (SPT) blow count in soil within the upper 100 ft of soil, calculated in accordance with Eq. (2-3)

N_{60} SPT blow count corrected to an equivalent hammer energy efficiency of 60%, Eq. (8-5)

$(N_1)_{60}$ SPT blow count normalized for an effective stress of 1 ton/ft^2 and corrected to an equivalent hammer energy efficiency of 60%, Eq. (8-6)

N/A Not applicable

N_b Number of bolts or rivets, Eqs. (9-18), (9-22), and (9-24)

N_{br} Number of diagonal braces in tension and compression if the braces are designed for compression, number of diagonal braces in tension if the braces are designed for tension only, Eq. (4-10)

NC Noncompliant

N_c Constant load on an isolator, Eqs. (C14-19), (C14-20), (C14-21), (C14-22), and (C14-24)

NL No limit

N_u Factored axial load normal to cross-section occurring simultaneously with V_u. To be taken as positive for compression, negative for tension, and to include effects of tension caused by creep and shrinkage, Eq. (10-3)

P Vertical load on footing, Eq. (8-8)

Axial force in a member, Eqs. (9-2) and (9-4)

Axial force in a concrete column, Eq. (C10-1)

Axial load at failure of a masonry core or prism test sample, Eqs. (11-3) and (11-4)

P_c Lower-bound of vertical compressive strength for wall or wall pier, Eqs. (11-7) and (11-13)

P_{CE} Expected axial strength of a member or joint, Eqs. (9-19), (9-20), (9-21), and (9-26)

Expected gravity compressive force applied to a wall or pier component stress

P_{CL} Lower-bound axial strength of a column, wall, or wall pier

P_D Superimposed dead load at the top of the wall or wall pier under consideration, Chapters 11 and 15

P_{D+L} Gravity compressive stress at the test location considering actual dead plus live loads in place at time of testing, Eqs. (11-1) and (15-1)

P_{EY} Probability of exceedance in Y years, expressed as a decimal, Eq. (1-2)

PI Plasticity index for soil, determined as the difference in water content of soil at the liquid limit and plastic limit, Section 2.4.1.6.1

P_0 Nominal axial load strength at zero eccentricity, Chapter 10

P_R Mean return period, Eq. (1-2)

P_{test} Splitting test load of masonry sample, Eqs. (15-2) and (15-3)

P_{UF} Design axial force in a member, Eqs. (9-10), (9-11), and (9-12)

P_W Self-weight of wall, Eqs. (11-8), (11-11), and (15-20)

P_{ye} Expected yield axial strength of a member, Eqs. (9-2) and (9-4)

P_s Seismic force caused by overturning moment on the bearing of a sliding isolator, Eq. (C14-13)

PC1 Precast/Tilt-up Concrete Shear Walls with Flexible Diaphragms building type, as defined in Table 3-1

PC1a Precast/Tilt-up Concrete Shear Walls with Stiff Diaphragms building type, as defined in Table 3-1

PC2 Precast Concrete Frames with Shear Walls building type, as defined in Table 3-1

PC2a Precast Concrete Frames without Shear Walls building type, as defined in Table 3-1

Q Generalized force in a component, Figs. 2-3, 2-5, 8-1, 9-1, 10-1, 11-1, and 12-1

Characteristic strength of an isolator unit, Chapter 14

Q_{allow} Allowable bearing load specified for the design of deep foundations for gravity loads (dead plus live loads) in the available design documents, Eq. (8-2)

Q_c Expected bearing capacity of deep or shallow foundation, Section 8.4

Q_{CE} Expected strength of a deformation controlled action of an element at the deformation level under consideration

Q_{CEb} Expected bending strength of the beam, Eq. (9-14)

Q_{CEf} Expected final lateral strength of URM walls or pier components, Eq. (11-10)

Q_{CL} Lower-bound estimate of the strength of a force-controlled action of an element at the deformation level under consideration

Q_{CLc} Lower-bound strength of the connection, Eq. (9-14)

Q_D Action caused by dead load, Eqs. (7-1), (7-2), and (7-3)

Q_E Action caused by the response to selected Seismic Hazard Level, Eqs. (7-34) and (7-35)

Q_G Action caused by gravity loads, Eqs. (7-1), (7-2), (7-3), and (8-3)

Q_{Gf} expected bearing load on footing due to gravity loads, including load due caused by overburden soil above the footing, Eq. (8-8)

Q_L Action caused by live load, Eqs. (7-1) and (7-3)

Q_S Action caused by snow load, Eqs. (7-1) and (7-3)

Q_{UD} Deformation-controlled action caused by gravity loads and earthquake forces

Q_{UF} Force-controlled action caused by gravity loads and earthquake forces

Q_y Yield strength of a component, Section 7.5.1.2

Q_{yL} Mean minus one standard deviation strength for a force-controlled action determined from a series of representative subassembly tests, Section 7.6.3

Q'_y Substitute yield strength, Fig. 2-5

R Radius of curvature of the sliding surface of a sliding isolator, Eq. (C14-12)

R_0 Radius of a spherical isolation device, Fig. C14-5 and Eq. (C14-21)

R_p Nonstructural component response modification factor from Table 11-2 and Eqs. (13-1) and (13-5)

RM1 Reinforced Masonry Bearing Walls with Flexible Diaphragms building type, as defined in Table 3-1

RM2 Reinforced Masonry Bearing Walls with Stiff Diaphragms building type, as defined in Table 3-1

RRS_{bsa} Ratio of response spectra factor for base slab averaging, Eq. (8-15)

RRS_e Ratio of response spectra factor for embedment, Eq. (8-19)

S The elastic section modulus of a member

The shape factor, defined as the ratio of the loaded area to the perimeter area of single rubber area, of a lead-rubber bearing, Eqs. (C14-10) and (C14-11)

S_1 Spectral response acceleration parameter at a one-second period, obtained from response acceleration contour maps

S1 Steel Moment Frames with Stiff Diaphragms building type, as defined in Table 3-1

S1a Steel Moment Frames with Flexible Diaphragms building type, as defined in Table 3-1

S2 Steel Braced Frames with Stiff Diaphragms building type, as defined in Table 3-1

S2a Steel Braced Frames with Flexible Diaphragms building type, as defined in Table 3-1

S3 Steel Light Frames building type, as defined in Table 3-1

S4 Steel Frames with Concrete Shear Walls building type, as defined in Table 3-1

S5 Steel Frames with Infill Masonry Shear Walls and Stiff Diaphragms building type, as defined in Table 3-1

S5a Steel Frames with Infill Masonry Shear Walls and Flexible Diaphragms building type, as defined in Table 3-1

S_a Spectral response acceleration

S_{DS} Design short-period spectral response acceleration parameter, adjusted for site class, for determining level of seismicity, Eq. (2-12)

S_{D1} Design spectral response acceleration parameter at a one-second period, adjusted for site class, for determining level of seismicity, Eq. (2-13)

S_n Distance between n-th pile and axis of rotation of a pile group, Eq. (8-14)

SPAF System property adjustment factor, Sections 14.2.2.1.3 and 14.3.2.3

SRSS Square root sum of squares

S_S Spectral response acceleration parameter at short periods, obtained from response acceleration contour maps

S_{X1} Spectral response acceleration parameter at a 1 s period for any Seismic Hazard Level and any damping, adjusted for site class

S_{XS} Spectral response acceleration parameter at short periods for the selected Seismic Hazard Level and damping, adjusted for site class

T Fundamental period of the building in the direction under consideration, sec

Fundamental period of the building using a model with a fixed base, seconds, Section 8.5

Tensile load in column, Eq. (9-13)

$\tilde{T}$ Fundamental period of the building using a model with a flexible base, seconds, Section 8.5

$\tilde{T}_{eff}/T_{eff}$ Effective period lengthening ratio, Eqs. (8-20), (8-21), and (8-29) and Fig. 8-7

T_0 Period at which the constant acceleration region of the design response spectrum begins at a value $= 0.2T_S$, Eq. (2-10)

T1 Tier 1 Evaluation

T2 Tier 2 Evaluation

T3 Tier 3 Evaluation

T_{90} Period of the highest mode in the same direction as T to achieve a 90% modal mass participation, C7.4.4.2.3

T_C Connection force for concrete or masonry walls to a flexible diaphragm, Eq. (4-13)

T_{CE} Expected tensile strength of column computed in accordance with Eqs. (9-8) and (9-13)

T_D Effective period, in seconds, of the seismic-isolated structure at the design displacement in the direction under consideration, Eqs. (14-4) and (14-5)

T_e Effective fundamental period of the building in the direction under consideration, in seconds for use with the NSP, Eqs. (7-27), (7-28), and (7-29)

Effective fundamental period, in seconds, of the building structure above the isolation interface on a fixed base in the direction under consideration, Eqs. (9-10) and (9-11)

T_i Elastic fundamental period of the building in the direction under consideration, for use with the NSP, Eq. (7-27)

T_L The long-period transition parameter, to be obtained from published maps, site-specific response analysis, or any other method approved by the authority having jurisdiction.

T_M Effective period, in seconds, of the seismic-isolated structure at the maximum displacement in the direction under consideration, Eqs. (14-6) and (14-7)

T_m m-th mode period of the building including the stiffness of the velocity-dependent devices, Eq. (14-40)

T_p Fundamental period of the nonstructural component, Eq. (13-4)

T_S Characteristic period of the response spectrum at which the constant acceleration segment of the response spectrum transitions to the constant velocity segment, Eq. (2-9)

The period of the structure about the isolation system, Eq. (14-14)

T_{ss} Secant fundamental period of a building calculated using Eq. (7-27), but replacing the effective stiffness (K_e) with the secant stiffness (K_s) at the target displacement, Eq. (14-42)

$\dot{U}$ Velocity of sliding, Eq. (C14-14)

URM Unreinforced Masonry Bearing Walls with Flexible Diaphragms building type as defined in Table 3-1

URMa Unreinforced Masonry Bearing Walls with Stiff Diaphragms building type as defined in Table 3-1

V^* Modified equivalent base shear, Chapter 14

V Pseudo-seismic force, Chapters 4 and 7

Design shear force at section concurrent with moment, M, Eq. (10-3)

V_a Shear strength of an unreinforced masonry pier, Chapter 15

V_b The total lateral seismic design force on elements of the isolation system or elements below the isolation system, Eq. (14-10)

V_{bjs1} Expected initial shear strength of wall or pier based on bed-joint sliding shear strength, Chapter 11

V_{bjs2} Expected final shear strength of wall or pier based on bed-joint sliding shear strength, Chapter 11

V_c Nominal shear strength provided by concrete, Chapter 10

Column shear force, Eq. (4-7)

V_{ca} Total shear capacity of cross walls in the direction of analysis immediately above the diaphragm level being investigated, Chapter 15

V_{cb} Total shear capacity of cross walls in the direction of analysis immediately below the diaphragm level being investigated, Chapter 15

V_{CE} Expected shear strength of a member, Eqs. (9-5), (9-7), (9-11), (9-31), (9-32), and (9-34)

V_{CL} Lower-bound shear strength, Eq. (11-4)

V_d Base shear at Δ_d, Fig. 7-3, Chapter 7

Diaphragm shear

V_{dt} Lower-bound shear strength based on diagonal tension stress for wall or wall pier, Eq. (11-12)

V_{fre} Expected story shear strength of the bare frame taken as the shear capacity of the column, Tables 11-8 and 11-9

V_g Shear caused by gravity loads, in accordance with Section 4.2.4.2

Shear acting on slab critical section caused by gravity loads, Chapter 10

V_i The total calculated lateral shear force in the direction under consideration in an element or at story i caused by earthquake response to the selected ground shaking level, as indicated by the selected linear analysis procedure, Eq. (7-17)

V_{ine} Expected shear strength of infill panel, Eq. (11-19) and Tables 11-8 and 11-9

V_j Story shear force, Chapters 4, 7, and 14

V_n Nominal shear strength at section, Chapter 10

V_o Shear strength of column without modification for flexural ductility, Eq. (10-3)

Shear strength of slab at critical section, Chapter 10

Punching shear capacity, Chapter 10

V_p Shear force at the development of the flexural capacity of a concrete element, Chapter 10

Shear force on an unreinforced masonry wall pier, Chapters 11 and 15

V_{pz} Panel zone shear, Chapter 9

V_r Expected shear strength of wall or wall pier based on rocking, Eqs. (11-8), (15-20), (15-21), and (15-24)

V_s Nominal shear strength provided by shear reinforcement, Chapter 10

V_{st} The total lateral seismic design force or shear on elements above the isolation system, Eq. (14-11)

V_t Base shear in the building at the target displacement, Chapter 3

V_{tc} Lower-bound shear strength based on toe crushing for a wall or wall pier, Eq. (11-11)

V_{test} Test load at first observed movement of a masonry unit for an in-place masonry shear test, Eqs. (11-1) and (15-1)

V_u Factored shear force at section, Chapter 10

V_{wx} Total shear force resisted by a shear wall at the level under consideration, Chapter 15

V_y Effective yield strength of the building in the direction under consideration, for use with the NSP, Sec. 7.4.3.2.4

Yield strength of the panel zone, Section 9.4.2.4.2 and 9.4.2.4.3

V_{ya} Nominal shear strength of a member modified by the axial load magnitude, Chapter 9

W Weight of a component, calculated as specified in this standard, Chapter 7

Effective seismic weight of a building, including total dead load and applicable portions of other gravity loads listed in Sections 4.5.2.1 and 7.4.1.3.1

Weight tributary to that portion of the diaphragm extending half of the distance to each adjacent tie or diaphragm boundary, Eq. (7-7)

Weight of the smaller portion of the building, Eq. (7-8)

The effective seismic weight of the structure above the isolation interface, Eq. (14-5)

The gravity load on a bearing in a sliding isolator, Eq. (C14-13)

W_d Total dead load tributary to a diaphragm, Chapter 15

W_D Energy dissipated in a building or element thereof or energy dissipation device during a full cycle of displacement, Eqs. (14-29) and (14-44)

W_j Total seismic weight of all stories above level j

Work done by an energy dissipating device, j, in one complete cycle corresponding to floor displacement, Eqs. (14-31), (14-33), (14-34), (14-41), and (14-42)

W_k Maximum strain energy in a frame, Eqs. (14-31), (14-32), (14-33), and (14-41)

W_{mj} Work done by device j in one complete cycle corresponding to modal floor displacements δ_{mi}, Eqs. (14-38) and (14-40)

W_{mk} Maximum strain energy in the frame in the m-th mode, Eqs. (14-38) and (14-39)

W_p Weight of the wall tributary to the wall anchor, Eqs. (7-9) and (7-10)

Weight of the wall per unit area, Eqs. (7-13) and (7-14)

Component operating weight, Eqs. (13-1), (13-2), (13-3), (13-4), (13-5), and (13-7)

W_w Total dead load of an unreinforced masonry wall above the level under consideration or above an open front of a building, Chapter 15

W_{wx} Dead load of an unreinforced masonry wall assigned to level x, taken from mid-story below level x to mid-story above level x, Chapter 15

W1 Wood Light Frames building type, as defined in Table 3-1

W1a Multi-Story, Multi-Unit Residential Wood Frames building type, as defined in Table 3-1

W2 Wood Frames, Commercial and Industrial building type, as defined in Table 3-1

X Height of upper support attachment at level x as measured from grade, Eq. (13-8)

X,Y Height of lower support attachment at level x or y as measured from grade

Y Time period in years corresponding to a mean return period and probability of exceedance, Eq. (1-2)

Height of lower support attachment at level y as measured from grade, Eq. (13-8)

Z Plastic section modulus, Eqs. (9-1), (9-2), (9-3), (9-4), and (9-6)

Z' Adjusted resistance for mechanical fastener, Chapter 8

a Parameter used to measure deformation capacity in component load–deformation curves, Figs. 7-4, C7-3, 9-1, 10-1, 11-1

Site class factor, Eqs. (7-22) and (7-29)

Longitudinal dimension of full footprint of building foundation, Eq. (8-11)

Clear width of wall between vertical boundary elements, Eqs. (9-33) and (9-34)

Equivalent width of infill strut, Eqs. (11-7), (11-9), (11-10), (11-11), and (11-12)

a' Parameter used to measure deformation capacity in component load–deformation curve, Fig. 2-5

a_1 Radiation damping coefficient, Eq. (8-21)

a_2 Radiation damping coefficient, Eq. (8-21)

a_n Diameter of masonry core multiplied by its length or area of the side of a square prism, Eqs. (15-2) and (15-3)

a_p Component amplification factor from Table 11-2 and Eqs. 11-1 and 11-5

b Parameter used to measure deformation capacity in component load–deformation curves, Figs. 7-4, C7-3, 9-1, 10-1, 11-1

Width of rectangular footings and the flange width of I-shaped footings, Fig. 8-3 and Table 8-3

Shear wall length or width, Eqs. (12-1) and (12-2)

Diaphragm width, Eqs. (12-4) and (12-5)

The shortest plan dimension of the building, measured perpendicular to d, Eqs. (14-8) and (14-9)

b_0 Parameter relating effective foundation area to building period, Eqs. (8-17) and (8-18)

b_a Connection dimension, Eqs. (9-22) and (9-23)

b_{bf} Beam flange width in equations for beam–column connections in Sections 9.4.2.4.2 and 9.4.2.4.3

b_{cf} Column flange width in equations for beam–column connections in Sections 9.4.2.4.2 and 9.4.2.4.3

b_e Effective foundation size, ft, Eqs. (8-17) and (8-18)

b_{eff} Effective width of slab when using an effective beam width model, Eq. (C10-3)

b_f Flange width, Chapter 9

b_p Width of rectangular glass, Eq. (13-11)

b_t Connection dimension, Eqs. (9-24) and (9-25)

b_w Web width, in., Chapter 10

c Parameter used to measure residual strength, Fig. 7-4, Eqs. (C7-3), (9-1), (10-1), and (11-1)

c_1 Size of rectangular or equivalent rectangular column, capital, or bracket measured in the direction of the span for which moments are being determined, in., Chapter 10

Clearance (gap) between vertical glass edges and the frame, Eq. (13-11)

c_2 Size of rectangular or equivalent rectangular column, capital, or bracket measured in perpendicular to the direction of the span for which moments are being determined, in., Section Chapter 10

Clearance (gap) between horizontal glass edges and the frame, Eq. (13-11)

c_e Radiation damping coefficient, Eq. (8-21)

d Parameter used to measure deformation capacity, Figs. 7-4, C7-3, 8-4, 9-1, 10-1, 11-1

Distance from extreme compression fiber to centroid of tension reinforcement, in., Eq. (10-3)

Width of a parapet, Fig. 13-1

The longest plan dimension of the building, Eqs. (14-8) and (14-9)

d_a Elongation of anchorage at end of wall determined by anchorage details and load magnitude, Eq. (8-1)

Deflection at yield of tie-down anchorage or deflection at load level to anchorage at end of wall determined by anchorage details and dead load, in., Eq. (8-2)

d_b Overall beam depth, Chapter 9

Nominal diameter of reinforcing bar, Chapters 10, 12, and 16

d_{bg} Depth of the bolt group, Tables 9-4 and 9-6

d_c Column depth, Chapters 9 and 10

d_i Depth, ft, of a layer of soils having similar properties, and located within 100 ft of the surface, Eqs. (2-3) and (2-4)

d_z Overall panel zone depth between continuity plates, Chapter 9

e Length of eccentrically braced frame (EBF) link beam, Chapter 9

Parameter used to measure deformation capacity, Figs. 7-4, C7-3, 8-4, 9-1, 10-1, 11-1

Foundation embedment depth, ft, Eq. (8-19)

Actual eccentricity measured in plan between the center of mass of the structure above the isolation interface and the center of rigidity of the isolation system, plus accidental eccentricity taken as 5% of the maximum building dimension perpendicular to the direction of force under consideration, Eqs. (14-8) and (14-9)

e_n Nail deformation at yield load per nail for wood structural panel sheathing, Eqs. (12-2), (12-4), and (12-5)

e_v Void ratio, Eq. (8-7)

f Parameter used to measure deformation capacity, Figs. 7-4, 8-4, 9-1, 10-1, 11-1

f_1 Fundamental frequency of the building, Chapter 14

f_a Axial compressive stress caused by gravity loads, Eqs. (11-11) and (11-12)

f_{ae} Expected vertical compressive stress on a masonry wall, Chapter 11

f_c' Compressive strength of concrete, Chapters 10 and 16

f_d Flexible diaphragm inertial force per foot, Eq. (C7-1)

f'_{dt} Lower-bound masonry diagonal tension strength, Eq. (11-12)

f_j^{avg} Average axial stress in diagonal bracing elements at level j, Eq. (4-10)

Average flexural stress in the columns and beams at level j, Eq. (4-15)

f_L Factor to calculate post-yield stiffness of a lead-rubber bearing, Eq. (C14-2)

f'_m Lower-bound masonry compressive strength, Chapters 11 and 15

f_{max} Coefficient of friction at large velocities of a sliding isolator, Eqs. (C14-14), (C14-21), and (C14-22)

f_{maxo} Coefficient of friction at large velocities of a sliding isolator based on initial bearing pressure, Eq. (C14-15)

f_{maxp} Coefficient of friction at large velocities of a sliding isolator based on the instantaneous additional bearing pressure of due to earthquake effects, Eq. (C14-15)

f_{me} Expected compressive strength of masonry, Chapter 11

f_{min} Coefficient of friction at small velocities of a sliding isolator, Eq. (C14-14)

f_{pc} Average compressive stress in concrete caused by effective prestress force only, after allowance for all prestress losses, Chapter 10

f_s Stress in reinforcement, lb/in.^{2}, Eqs. (10-1) and (10-2)

f_{sp} Tensile splitting strength of masonry, Chapters 11 and 15

f_{spe} Average mortar tensile splitting strength of masonry, Eq. (11-5)

f_{spl} Mean minus one standard deviation mortar tensile splitting strength of masonry, Eq. (11-7)

f'_t Lower-bound masonry tensile strength, Chapter 11

f_{te} Expected masonry flexural tensile strength, Chapter 11

f_{vie} Expected shear strength of masonry infill bed joints, Eq. (11-19)

f_y Yield stress of reinforcing steel, Chapter 10

f_{ye} Expected yield strength of reinforcing steel, Chapter 10

f_{yl} Lower-bound yield strength of reinforcing steel, Chapter 10

f_{yt} Lower-bound yield strength of shear reinforcing steel, Eq. (C10-1)

g Acceleration of gravity 386.1 in./sec^2 (or 9,807 mm/sec^2 for SI units)

Parameter used to measure deformation capacity, Figs. 7-4, 8-4, 9-1, 10-1, 11-1

h Period effect factor = $1 + 0.15 \cdot \ln T_e$, Eq. (3-16)

Average story height above and below a beam–column joint, Eqs. (4-7) and (4-15)

Effective structure height, Sec. 8.5.2, Eq. (8-22), Fig. 8-7

Clear height of wall between beams, Eq. (9-33)

Distance from inside of compression flange to inside of tension flange, Chapter 9

Height of member along which deformations are measured, Chapter 10

Overall thickness of member, in., Chapter 10

Height of a column, pilaster, or wall, Eq. (4-11), Chapter 11

Shear wall height, Chapters 10 and 12

Average roof elevation of structure, relative to grade elevation, Eqs. (13-1) and (13-6)

Height of the parapet above the point of anchorage of the wall to the diaphragm, Fig. 13-1

h_c Assumed web depth for stability, Chapter 9

Gross cross-sectional dimension of column core measured in the direction of joint shear, in., Chapter 10

h_{cb} Height of a composite column, Eq. (11-15)

h_{col} Height of column between beam centerlines, Fig. C11-6

h_{eff} Effective height of wall or wall pier components under consideration, Chapter 11

h_i, h_x Height from the base to floor level i or x, Eqs. (4-3a), (7-25), (8-22), (14-13)

h_{inf} Height of infill panel, Chapter 11

h_n Height above base to roof level, ft, Eqs. (4-5), (4-12), (7-12), (7-18), (13-4) and (13-5c)

h_p Height of rectangular glass, Eq. (13-11)

h_w Height of infill wall, Eq. (11-16)

h_x Height from base to floor level x, ft, Eqs. (7-25) and (9-9)

j Number of story level under consideration

k Exponent related to the building period, used to define the vertical distribution of lateral forces, Eqs. (4-3a) and (7-25)

Coefficient used for calculation of column shear strength based on displacement ductility, Eq. (10-3)

k_a Factor to account for diaphragm flexibility, Eqs. (7-9), (7-10), and (7-11)

k_b Stiffness of a representative beam, Eq. (4-7)

k_{bi} Exponent related to the building period above the isolation system and the damping of the isolation system, used to define the vertical distribution of lateral forces, Eqs. (14-13) and (14-14)

k_c Stiffness of a representative column, Eq. (4-7)

k_1 Distance from the center of the split tee stem to the edge of the split tee flange fillet, Eq. (9-25)

k_{eff} Effective stiffness of an isolator unit or an energy dissipation device, Chapter 14

k_h Horizontal seismic coefficient in soil acting on retaining wall, Eq. (8-30)

Factor to account for variation in force over the height of the building when all diaphragms are rigid, Eqs. (7-9) and (7-12)

k_p Post-yield stiffness of a lead-rubber bearing, Eqs. (C14-2), (C14-3), (C14-4), (C14-5), and (C14-24)

k_{sr} Winkler spring stiffness in overturning (rotation) for pile group, expressed as moment/unit rotation, Eq. (8-14)

k_{sv} Winkler spring stiffness in vertical direction, expressed as force/unit displacement/unit area, Eq. (8-11)

Pile group axial spring stiffness expressed as force/unit displacement, Eq. (8-13)

k_v Shear buckling coefficient, Chapter 9

Vertical stiffness of an elastomeric bearing, Eq. (C14-9)

k_{vn} Axial stiffness of n-th pile in a pile group, Eq. (8-14)

l Clear length of brace, Chapter 9

l_1 Length of slab span in a slab-column in the direction of seismic forces, Chapter 10

l_2 Length of slab span in a slab-column in the direction perpendicular to the seismic forces, Chapter 10

l_b	Clear length of beam, Chapter 9
	Length of beam, Eq. (9-1)
	Provided length of straight development, lap splice, or standard hook, in., Eq. (10-1)
l_{beff}	Assumed distance to infill strut reaction point for beams, Eq. (7-11)
l_c	Length of column, Eqs. (9-2) and (9-36)
l_{ceff}	Assumed distance to infill strut reaction point for columns, Chapter 11
l_d	Required length of development for a straight bar, in., Eq. (10-1)
l_e	Length of embedment of reinforcement, in., Eq. (10-2)
l_p	Length of plastic hinge used for calculation of inelastic deformation capacity, in., Eq. (10-5)
l_w	Length of entire wall or a segment of wall considered in the direction of shear force, in., Chapter 10
m	Component demand modification factor to account for expected ductility associated with this action at the selected Structural Performance Level. m-factors are specified in Chapters 8 through 12 and 14
m_e	Effective m-factor due to lateral torsional buckling, Eq. (9-9)
m_i	mass at level i, Eq. (C7-5)
m_{max}	Largest m-factor for all primary elements of the building in the direction under consideration, Eq. (7-21), Table 7-2
m_t	Value of m-factor for the column in tension, Eq. (9-13)
m_x	Value of m for bending about the x-axis of a member, Eqs. (9-10), (9-11), (9-13), and (10-1)
m_y	Value of m for bending about the y-axis of a member, Eqs. (9-10), (9-11), (9-13), and (10-1)
n	Total number of stories in the vertical seismic framing above the base, Eqs. (4-6) and (C3-2)
	Shear wave velocity reduction factor, Eq. (8-12)
n_c	Total number of columns, Eqs. (4-8) and (4-11)
n_f	Total number of frames, Eqs. (4-8) and (4-11)
n_p	Number of prestressed strands
p	The instantaneous bearing pressure on a sliding isolator due to the initial pressure and the pressure due to earthquake effects, Eq. (C14-15)
p_a	atmospheric pressure
q	Vertical bearing pressure, Eq. (8-6)
q_{allow}	Allowable bearing pressure specified in the available design documents for the design of shallow foundations for gravity loads (dead plus live loads), Eq. (8-1)
q_c	Expected bearing capacity of shallow foundation expressed in load per unit area, Section 8.4
q_{in}	Expected transverse strength of an infill panel, Eq. (7-21)
$q_{sp,max}$	Vertical bearing capacity of the soil springs per unit area of the footing, Sec. 8.4
r	Governing radius of gyration, Chapter 9
r_θ	Equivalent foundation radius for rotation, Eq. (8-23), Fig. 8-7
r_{inf}	Diagonal length of infill panel, Fig. C11-6
r_x	Equivalent foundation radius for translation, Eq. (8-28), Fig. 8-7
s	Spacing of shear reinforcement, Eqs. (10-3) and (C10-1)
	Average span length of braced spans, Eq. (4-10)
s_i	Minimum separation distance between adjacent buildings at level i, Eq. (7-15)
s_u	Undrained shear strength of soil, lbs/ft^2, Section 2.4.1.61
$\overline{s_u}$	Average undrained shear strength in the top 100 feet, Section 2.4.1.61
s_u	Average value of the undrained soil shear strength in the upper 100 ft of soil, calculated in accordance with Eq. (2-3), lbs/ft^2
t	Thickness of continuity plate, Chapter 9
	Thickness of footing, Eq. (C8-3)
	Effective thickness of wood structural panel or plywood for shear, in., Eqs. (12-2), (12-4), and (12-5)
	Thickness of wall, Chapters 10 and 11
	Thickness of a rubber layer in a lead-rubber bearing, Chapter 14
t_a	Thickness of angle, Eqs. (9-21) and (9-23)
t_{bf}	Thickness of beam flange, Chapter 9
t_{bw}	Thickness of beam web, Chapter 9
t_{cf}	Thickness of column flange, Chapter 9
t_{cw}	Thickness of column web, Chapter 9
t_f	Thickness of flange, Chapter 9
t_{inf}	Thickness of infill panel, Chapter 11
t_p	Thickness of panel zone including doubler plates, Eq. (9-5)
	Thickness of flange plate, Eq. (9-26)
t_s	Thickness of split-Tee stem, Eqs. (9-24) and (9-25)
t_w	Thickness of web, Chapter 9
	Thickness of steel plate shear wall, Eq. (9-33)
	Thickness of wall web, in., Chapter 10
	Thickness of infill wall, Eq. (C11-3)
t_z	Thickness of panel zone (doubler plates not necessarily included), Chapter 9
u	pore-water pressure, Eq. (8-5)
v	Maximum shear in the direction under consideration, Eq. (8-5)
	Shear stress based on masonry bond lay-up, Section 15.2.2.3.1
v_a	Shear stress for unreinforced masonry, Chapters 11 and 15
v_j^{avg}	Average shear stress at level j, Eqs. (4-8) and (4-9)
v_c	Unit shear strength for a cross wall, Chapter 15
v_{me}	Expected masonry shear strength, Eqs. (11-2), (11-9), (15-4), and (15-5)
v_{mL}	Lower-bound masonry shear strength, Eqs. (11-6) and (11-7)
v_s	Effective shear wave velocity for site soil conditions, ft/s, Section 8.5
v_{si}	Shear wave velocity in soil at layer i, ft/s, Eq. (2-3)
v_{s0}	Shear wave velocity in soil at low strains, ft/s, Eq. (8-4), Section 8.5
v_s	Average value of the soil shear wave velocity in the upper 100 ft of soil, calculated in accordance with Eq. (2-3), ft/s
v_{tL}	Lower-bound bed-joint shear strength defined as lower 20th percentile of v_{to}, Eq. (11-6)
v_{to}	Bed-joint shear stress from single test, Eqs. (11-1) and (15-1)
v_{te}	Mortar shear test value, Chapters 11 and 15
v_u	Unit shear capacity for a diaphragm, Chapter 15
v_y	Shear at yield in the direction under consideration in lb/ft, Chapter 8

w Water content of soil, calculated as the ratio of the weight of water in a unit volume of soil to the weight of soil in the unit volume, expressed as a percentage, Section 2.4.1.6.1

Length of connection member, Eqs. (9-23) and (9-25)

w_i Portion of the effective seismic weight located on or assigned to floor level i, Eqs. (4-3a), (7-25), (7-26), (C7-2), (8-22), (8-26), (14-13), and (14-35)

w_x Portion of the effective seismic weight located on or assigned to floor level x, Eqs. (4-3a), (7-25), (7-26), and (14-13)

w_z Width of panel zone between column flanges, Chapter 9

x Elevation in structure of component relative to grade elevation, Eqs. (13-1) and (13-6)

Distance from the centerline of the flexible diaphragm, Eq. (C7-1)

y The distance between the center of rigidity of the isolation system rigidity and the element of interest, measured perpendicular to the direction of seismic loading under consideration, Eqs. (14-8) and (14-9)

z_a Height, in feet, of the wall anchor above the base of the structure, not to exceed h_n, Eq. (7-12)

Δ Calculated deflection of diaphragm, wall, or bracing element

Generalized deformation, Figs. 2-3, 2-5, 9-1, 10-1, 8-1

Total elastic and plastic displacement, Chapter 9

Δ^- Negative displacement amplitude of an isolator or energy dissipation unit during a cycle of prototype testing, Eqs. (14-17), (14-18), (14-43), and (C14-17)

Δ^+ Positive displacement amplitude of an isolator or energy dissipation unit during a cycle of prototype testing, Eqs. (14-17), (14-18), (14-43), and (C14-17)

Δ_{ave} Average displacement of an energy dissipation device during a cycle of prototype testing, equal to $(|\Delta^+| + |\Delta^-|)/2$, Eq. (14-44)

Δ_{bm} Buckling restrained brace story drift deformation parameter per AISC 341, Section 9.5.4.4

Δ_c Axial deformation at expected buckling load, Section 5.6.2

Δ_d Diaphragm deformation, Eqs. (7-19) and (7-20)

Lesser of the target displacement or displacement corresponding to the maximum base shear defined in Fig. 7-3, Eq. (7-32)

Δ_{eff} Differentiated displacement between the top and bottom of the wall or wall pier components under consideration over a height, h_{eff}, Fig. C11-1

$\Delta_{fallout}$ Relative seismic displacement (drift) causing glass fallout from the curtain wall, storefront, or partition, as determined in accordance with an approved engineering analysis method, Eqs. (13-12) and (13-13)

Δ_i Story displacement (drift) of story i divided by the story height, Chapter 5

Δ_{i1} Lateral deflection of building 1 at level i relative to the ground for the selected Seismic Hazard Level, Eq. (7-15)

Δ_{i2} Estimated lateral deflection of building 2 at level i relative to the ground using the provisions of this standard or other approved approximate procedures for the selected Seismic Hazard Level, Eq. (7-15)

Δ_{inf} Deflection of infill panel at mid-length when subjected to transverse loads, Eq. (11-20)

Δ_p Additional earth pressure on retaining wall caused by earthquake shaking, Eq. (8-30)

Δ_t Axial deformation at expected tensile yield load, Section 5.6.2

$\Delta_{tc,r}$ Lateral displacement associated with the onset of toe crushing $V_{tc,r}$, Table 11-4

Δ_w In-plane wall deformation, Eq. (7-19)

Δ_y Calculated deflection of diaphragm, shear wall, or bracing element at yield

Displacement at effective yield strength, Fig. 7-3, Eq. (7-32)

Generalized yield deformation, unitless, Fig. 9-1

Γ_1 First modal mass participation factor, Eq. (C7-4)

$\Sigma(\Delta_c X)$ Sum of individual chord-splice slip values on both sides of the diaphragm, each multiplied by its distance to the nearest support, Eqs. (12-3), (12-4), and (12-5)

ΣE_D Total energy dissipated in the isolation system during a full cycle of response at the design displacement, D_D, Eq. (14-21)

ΣE_M Total energy dissipated in the isolation system during a full cycle of response at the maximum displacement, D_M, Eq. (14-22)

$\Sigma|F_D^+|$ Sum, for all isolator units, of the maximum absolute value of force, kips (kN), at a positive displacement equal to D_D, Eq. (14-19)

$\Sigma|F_M^+|$ Sum, for all isolator units, of the maximum absolute value of force, kips (kN), at a positive displacement equal to D_M, Eq. (14-20)

$\Sigma|F_D^-|$ Sum, for all isolator units, of the maximum absolute value of force, kips (kN), at a negative displacement equal to D_D, Eq. (14-19)

$\Sigma|F_M^-|$ Sum, for all isolator units, of the maximum absolute value of force, kips (kN), at a negative displacement equal to D_M, Eq. (14-20)

Σt Total rubber thickness in a lead rubber bearing, Eqs. (C14-2), (C14-5), and (C14-8)

α Factor equal to 0.5 for fixed-free cantilevered shear wall, or 1.0 for fixed-fixed wall pier, Eqs. (7-8) and (7-11)

Dimensionless parameter to relate axial failure to shear reinforcement and axial force in a concrete column, Eq. (C10-1)

Velocity exponent for a fluid viscoelastic device, Eq. (14-30)

α_1 Positive post-yield slope ratio equal to the positive post-yield stiffness divided by the effective stiffness, Fig. 7-3

α_2 Negative post-yield slope ratio equal to the negative post-yield stiffness divided by the effective stiffness, Fig. 7-3, Eq. (7-33)

α_e Effective negative post-yield slope ratio equal to the effective post-yield negative stiffness divided by the effective stiffness, Eqs. (7-32) and (7-33)

$\alpha_{P\text{-}\Delta}$ Negative slope ratio caused by P-Δ effects, Fig. 7-3, Eq. (7-33)

β Effective viscous damping ratio expressed as a decimal (as opposed to percent)

	Factor to adjust empirical fundamental period of the building, Eqs. (4-5) and (7-18)
	Ratio of the compression strength to the tension strength of a buckling restrained braced frame per AISC 341, Section 9.5.4.3
	Ratio of expected frame strength, to expected infill strength, Chapter 11
β_0	Effective damping ratio of the structure–foundation system, Eq. (8-20)
β_D	Effective damping of the isolation system at the design displacement, Eq. (14-4)
β_{eff}	Effective stiffness factor for cracked section of a slab modeled using an effective beam width model, Eq. (C10-4)
	Effective damping of isolator unit or an energy dissipation device, Eqs. (14-18), (14-31), (14-33), and (14-44)
$\beta_{eff\text{-}m}$	Effective damping in m-th mode prescribed by Eq. (14-38)
β_f	Soil-structure interaction damping ratio, Eqs. (8-20) and (8-21), Fig. 8-7
β_M	Effective damping of the isolation system at the maximum displacement, Eq. (14-6)
β_m	m-th mode damping in the building frame, Eq. (9-33)
γ	Unit weight, weight/unit volume (lbs/ft^3), Eq. (8-4)
	Coefficient for calculation of joint shear strength, Eq. (10-4)
γ_f	Fraction of unbalanced moment transferred by flexure at slab–column connections, Chapter 10
γ_t	Total unit weight of soil, Eqs. (8-9) and (8-30)
δ_{avg}	The average of displacements at the extreme points of the diaphragm at level x
δ_{xB}	Deflection at level x of building B, determined by an elastic analysis as defined in Chapter 3, Eq. (11-8)
δ_{cm}	Displacement at the center of mass of the roof, Section 7.4.3.3.1
δ_i	Displacement at level i caused by seismic force F_i, Eq. (C7-2)
	Displacement at level i, Eq. (14-32)
δ_{max}	The maximum displacement at any point of the diaphragm at level x, Section 7.4.3.3.1
δ_{mi}	m-th mode horizontal displacement at level i, Eq. (14-39)
δ_{mrj}	m-th relative displacement between the ends of device j along its axis, Eq. (14-40)
δ_{rj}	Relative displacement between the ends of energy dissipating device j along the axis of the device, Eq. (14-34)
δ_t	Target displacement, Sec. 7.4.3.3.2
δ_{xA}	Deflection at level x of building A, Eqs. (13-8) and (13-9)
δ_{xB}	Deflection at building level x of building B, Eq. (13-9)
δ_{yA}	Deflection at level y of building A, Eq. (11-7)
η	Displacement multiplier, greater than 1.0, to account for the effects of torsion, Section 7.2.3.2.2
θ	Generalized deformation, radians, Figs. 9-1, 10-1
	Angle between infill diagonal and horizontal axis, $\tan\theta = h_{inf}/L_{inf}$, radians, Eq. (7-7)
θ_b	Angle between lower edge of compressive strut and beam, radians, Eqs. (7-11) and (7-12)
θ_c	Angle between lower edge of compressive strut and column, radians, Eqs. (7-9) and (7-10)
θ_i	Story drift ratio, radians, Chapter 5
θ_j	Angle of inclination of energy dissipation device to the horizontal, Eq. (14-35)
θ_y	Generalized yield deformation, radians, Fig. 9-1
	Yield rotation, radians, Eqs. (9-1), (9-2), (9-30), and (10-5)
κ	A knowledge factor used to reduce component strength based on the level of knowledge obtained for individual components during data collection, Sections 5.2.6 and 6.2.4
λ	Near field effect factor, Eq. (7-33)
	Correction factor related to unit weight of concrete, Eqs. (10-3) and (10-4)
	Property variation factor for seismic isolator units, Chapter 14
λ_1	Coefficient used to determine equivalent width of infill strut, Eq. (7-7)
λ_2	Infill slenderness factor, Eq. (7-21) and Table 11-11
$\lambda_{effect,lower}$	Multiplier to covert nominal isolator or energy dissipation device property to the lower-bound based on environmental and aging effects, Chapter 14
$\lambda_{effect,upper}$	Multiplier to covert nominal isolator or energy dissipation device property to the upper-bound based on environmental and aging effects, Chapter 14
$\lambda_{spec,lower}$	Multiplier to covert nominal isolator or energy dissipation device property to the lower-bound based on manufacturing variation, Chapter 14
$\lambda_{spec,upper}$	Multiplier to covert nominal isolator or energy dissipation device property to the upper-bound based on manufacturing variation, Chapter 14
$\lambda_{lower,PM}$	Multiplier to covert nominal isolator or energy dissipation device property to the lower-bound based on the product of all the different $\lambda_{effect,lower}$, Chapter 14
$\lambda_{upper,\ PM}$	Multiplier to covert nominal isolator or energy dissipation device property to the upper-bound based on the product of all the different $\lambda_{effect,upper}$, Chapter 14
μ	Expected ductility demand
	Coefficient of shear friction, Chapter 10
μ_{max}	Maximum strength ratio, Eq. (7-32)
μ_{OT}	Response modification factor for overturning moment M_{OT}, Eq. (7-6)
μ_s	Coefficient of sliding friction, Eq. (C14-12)
$\mu_{strength}$	Ratio of the elastic strength demand to yield strength, Eqs. (7-31) and (C7-3)
ν	Poisson's ratio, Eqs. (8-4) and (8-11)
ν	Poisson's ratio for the foundation material, Eq. (C8-3)
ρ	Ratio of nonprestressed tension reinforcement, Chapters 10 and 11
ρ_{bal}	Reinforcement ratio producing balanced strain conditions, Chapter 10
ρ_g	Total of vertical reinforcement ratio plus horizontal reinforcement ratio in a wall or wall pier, Chapter 11
ρ_h	Horizontal reinforcement ratio in a wall or wall pier, Chapter 11
ρ_{lp}	Yield deformation of a link beam, Chapter 9
ρ_n	Ratio of distributed shear reinforcement in a plane perpendicular to the direction of the applied shear, Chapter 10
ρ_v	Vertical reinforcement ratio in a wall or wall pier, Chapter 11

ρ' Ratio of nonprestressed compression reinforcement, Chapter 10

ρ'' Reinforcement ratio for transverse joint reinforcement, Chapter 10

ρ'' Volumetric ratio of horizontal confinement reinforcement in a joint

σ Standard deviation of the variation of the material strengths, Section 7.5.1.4

$\sigma'_1, \sigma'_2, \sigma'_3$ Triaxial components of the state of stress the soil is under below the footing, Section 8.4.2.2

σ'_{mp} Mean effective stress $(\sigma'_1 + \sigma'_2 + \sigma'_3)$ averaged over the relevant region below the footing Eqs. (8-8) and (8-9)

σ'_{vo} Effective vertical stress, Eq. (8-9)

σ_{YL} Yield shear stress of lead, Eq. (C14-1)

ϕ Strength reduction factor

Angle of shearing resistance for soil, Chapter 8

Bonded diameter of a circular lead-rubber bearing, Eq. (C14-11)

ϕ_1 First mode shape vector, Eq. (C7-4)

$\phi_{1,r}$ Ordinate of mode shape 1 at the roof control node, Eqs. (C7-4) and (C7-5)

ϕ_i Modal displacement of floor i, Eqs. (8-22), (8-26), and (14-35)

ϕ_{i1} First mode displacement at level i, Eq. (14-13)

$\phi_{i,n}$ Ordinate of mode shape i at level n, Eq. (C7-5)

ϕ_{rj} Relative modal displacement in horizontal direction of energy dissipation device j, Eq. (14-35)

χ A factor for calculation of out-of-plane wall anchorage forces, Eqs. (7-9), (7-10), (7-13), and (7-14), Table 7-1

ω Factor to increase the strength of a buckling restrained brace to account for strain hardening per AISC 341, Section 9.5.4.3

ω_1 Fundamental angular frequency equal to $2\pi f_1$, Eq. (14-29)

1.3 EVALUATION AND RETROFIT PROCESS

The evaluation procedure or the design of retrofit measures to achieve the selected performance objective shall be performed in accordance with the evaluation process specified in Section 1.4, or the retrofit process specified in Section 1.5. The use of alternative performance-based criteria and procedures approved by the authority having jurisdiction shall be permitted.

C1.3 EVALUATION AND RETROFIT PROCESS

Provisions of this standard for seismic evaluation and retrofit are based on a performance-based design methodology that differs from seismic design procedures for the design of new buildings currently specified in national model building codes and standards. The framework in which these requirements are specified is purposefully broad so that performance objectives can accommodate buildings of different types, address a variety of performance levels, and reflect the variation of seismic hazards across the United States and U.S. territories.

This standard merges ASCE 31 (ASCE 31-03) *Seismic Evaluation of Existing Buildings* with ASCE 41 (ASCE 41-06) *Seismic Rehabilitation of Existing Buildings* into a common document. The combination of these documents eliminates significant differences between the ASCE 31 seismic evaluation and ASCE 41 retrofit processes to form a common methodology and approach. The provisions and commentary of this standard are based primarily on ASCE 31 and ASCE 41 but have been significantly updated and reorganized.

ASCE 31 evolved from and replaced FEMA 310, *Handbook for the Seismic Evaluation of Buildings—A Prestandard* (FEMA 1998e). ASCE 31 was developed to reflect the evaluation experience of design professionals and lessons learned from past earthquakes.

The predecessor to ASCE 41 was FEMA 356 *Prestandard and Commentary for the Seismic Rehabilitation of Buildings* (FEMA 2000g). FEMA 356 was based on FEMA 273 (FEMA 1997a), which was developed by a large team of specialists in earthquake engineering and seismic evaluation and retrofit. The standard incorporates many advances made in the analysis and design evaluation of structures that are likely to have general or widespread application in the performance evaluation of existing structures and reflect known laboratory experience and field observations of earthquake damage. The acceptance criteria have been specified using actual laboratory test results, where available, supplemented by the engineering judgment of various development teams. Engineering judgment should be exercised in determining the applicability of various analysis techniques and material acceptance criteria in each situation.

The commentary to this standard contains specific references to many other documents. In addition, this standard is related generically to the following publications.

1. ASCE/SEI 7-10 (2010) *Minimum Design Loads for Buildings and Other Structures*.
2. FEMA P-750 (2009c) *NEHRP Recommended Seismic Provisions for New Buildings and Other Structures*, also referred to herein as the *2009 NEHRP Recommended Provisions*.
3. FEMA 172 (1992a) *NEHRP Handbook of Techniques for the Seismic Rehabilitation of Existing Buildings*, originally produced by URS/Blume and Associates and reviewed by the Building Seismic Safety Council (BSSC), contains construction techniques for implementing engineering solutions to the seismic deficiencies of existing buildings.
4. FEMA 275 (1998a) *Planning for Seismic Rehabilitation: Societal Issues*, discusses societal and implementation issues associated with rehabilitation and describes several case histories.
5. FEMA 276 (1997c) *Guidelines for the Seismic Rehabilitation of Buildings: Example Applications*, intended as a companion document to FEMA 273 (1997a) and FEMA 274 (1997b), describes examples of buildings that have been seismically rehabilitated in various seismic regions and for different Performance Objectives. Costs of the work are given, and references are made to FEMA 156 (1995a) and 157 (1995b). Because this document is based on previous case histories, none of the examples was rehabilitated specifically in accordance with this standard. However, performance levels defined in this standard are not intended to be significantly different from parallel levels used previously, and the case studies are therefore considered representative.

Judgment by the Design Professional. Although this standard provides prescriptive direction for the evaluation and retrofit of existing buildings, it is not to be taken as the only direction. This standard provides direction for common details, deficiencies, and behavior observed in past earthquakes that are found in common building types. However, every structure is unique and may contain features and details that are not covered by this standard. It is important that the design professional use judgment where applying the provisions of this standard. The design

professional should always look for uncommon details and behavior about the structure that may have the potential for damage or collapse or that may improve the performance of the building relative to buildings of the same building type.

The design professional should review initial considerations with the authority having jurisdiction to determine any restrictions that exist on the use of evaluation procedures. Initial considerations include structural characteristics of the building; seismic hazards, including geologic site hazards known to be present at the site; results of prior seismic evaluations; building use and occupancy requirements; historic status; economic considerations; societal issues; and local jurisdictional requirements.

1.4 SEISMIC EVALUATION PROCESS

Seismic evaluation shall be conducted in accordance with the process outlined in Sections 1.4.1 through 1.4.5.

C1.4 SEISMIC EVALUATION PROCESS

A major portion of the process is dedicated to instructing the evaluating design professional on how to determine if a building is adequately designed and constructed to resist seismic forces. The need for evaluation using this standard may have been caused by a client's concern for knowing the vulnerability of the building; by a regulation, building code, or policy trigger for analysis or modification of the building; by a requirement for a financial transaction; or from many other sources. When resources are limited, before using the evaluation methods of this standard, the design professional might consider using FEMA 154 (1988), *Rapid Visual Screening of Buildings for Potential Seismic Hazards: A Handbook* (updated in 2002).

Before conducting the seismic evaluation based on this standard, the design professional should understand the evaluation process and the basic requirements specified in this section. The evaluation process consists of the following three tiers, as shown in Figure C1-1: Tier 1 screening procedure, Tier 2 deficiency-based evaluation procedure, and Tier 3 systematic evaluation procedure. As indicated in Figure C1-1, the design professional may choose to (1) report deficiencies and recommend mitigation or (2) conduct further evaluation, after any tier of the evaluation process. The evaluation process can begin with the Tier 3 systematic evaluation and not incur the expense of the earlier tiers. This decision is appropriate when there is little professional doubt, either that the building has significant seismic deficiencies related to a selected Performance Objective or that the work to be done will trigger retrofit work. The advantage of doing the Tier 1 or 2 assessments as the starting point is that it may identify other deficiency-based alternatives for retrofitting the building.

Some design professionals have based the seismic evaluation of buildings on the provisions for the design of new buildings. Although this route may seem appropriate, it must be done with full knowledge of the inherent assumptions. Codes for new buildings contain requirements that govern building configuration, strength, stiffness, detailing, and special inspection and testing. The strength and stiffness requirements are easily transferred to existing buildings; the other provisions are not. If the seismic-force-resisting elements of an existing building do not have details of construction similar to those required for new construction, the basic assumptions of ductility will not be met and the results of the evaluation may not be valid. This procedure could lead to evaluating a building as unacceptable for a given Performance Objective when it is acceptable or to evaluating a building as acceptable when it is unacceptable for a given Performance Objective. Care must be taken in applying code provisions for new buildings to structures that have noncompliant elements; this subject is not addressed in this standard.

Potential seismic deficiencies in existing buildings may be identified using this standard. If the evaluation is voluntary, the owner may choose to accept the risk of damage from future earthquakes rather than upgrade, or demolish the building. If the evaluation is required by a local ordinance for a hazard-reduction program or triggered by a regulation, building code, or policy, the owner may have to choose among retrofit, demolition, occupancy limitations, or other options.

1.4.1 Selection of Performance Objective Unless otherwise specified by the authority having jurisdiction, a seismic Performance Objective shall be selected for the building in accordance with the requirements of Section 2.2. The Structural Performance Level and Nonstructural Performance Level and the Seismic Hazard Level for their evaluation shall be determined by the owner or client in consultation with the design professional or the authority having jurisdiction, if so required.

C1.4.1 Selection of Performance Objective This standard may be used on a voluntary basis or may be required by the authority having jurisdiction. In jurisdictionally mandated seismic retrofit programs, the code official serves as the authority having jurisdiction. In voluntary seismic retrofit programs, either the building owner or the owner's designated agents are permitted to select performance objectives and decide at what stage to complete the evaluation.

Chapter 2 identifies six Structural Performance Levels (S-1 through S-5, plus S-6, Not Considered) and four Nonstructural Performance Levels (N-A through N-C, plus N-D, Not Considered. For Tier 1 and Tier 2 evaluations, two Performance Levels for both structural and nonstructural components are addressed in this standard: Life Safety (S-3) and Immediate Occupancy (S-1) as defined in Section 2.3.1.

The concepts and terminology of performance-based design should be carefully studied and discussed with building owners before use. The terminology used for target Building Performance Levels is intended to represent goals of design. The actual ground motion is seldom comparable to that specified in the Performance Objective, so in most events, designs targeted at various damage states may only determine relative performance. Even given a ground motion similar to that specified in the Performance Objective and used in design, variations from stated performance objectives should be expected, and compliance with this standard should not be considered a guarantee of performance. Variations in actual performance could be associated with unknown geometry and member sizes in existing buildings, deterioration of materials, incomplete site data, variation of ground motion that can occur within a small area, and incomplete knowledge and simplifications related to modeling and analysis. Information on the expected reliability of achieving various target Building Performance Levels when the requirements are followed can be found in Chapter 2 of FEMA 274 (FEMA 1997b).

1.4.2 Level of Seismicity The level of seismicity at the building site shall be determined in accordance with Section 2.5.

1.4.3 As-Built Information Available as-built information for the building shall be obtained and a site visit shall be conducted as specified in Section 3.2 and the applicable requirements of Chapters 4 through 6. For Tier 1 screenings and Tier 2 evaluations, the as-built information shall include the classification of building type in accordance with Section 3.2.1.

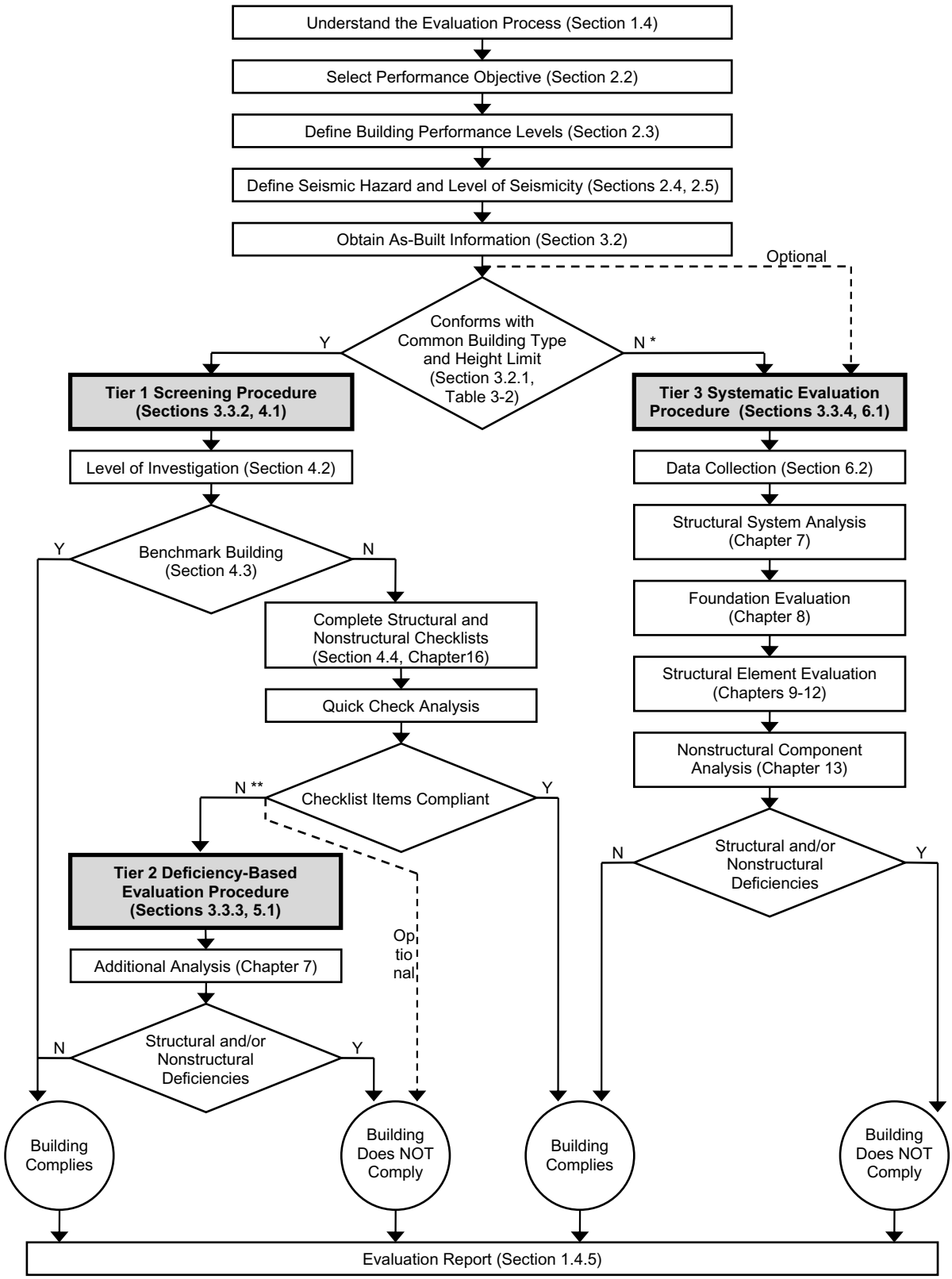

* It may be beneficial for the engineer to perform a Tier 1 Screening Evaluation prior to a Tier 3 Systematic Evaluation even though it is not required.
** The evaluation process may proceed directly to the Tier 3 Systematic Evaluation as an option.

FIG. C1-1. Evaluation Process

C1.4.3 As-Built Information A sample form for collecting and documenting building data is included in Appendix C.

1.4.4 Evaluation Procedures Based on the selected Performance Objective, level of seismicity, and building type, an applicable evaluation procedure shall be selected in accordance with Section 3.3.

C1.4.4 Evaluation Procedures This standard contains three procedures for seismic evaluation. The Tier 1 screening and Tier 2 deficiency-based procedures are intended for buildings meeting the criteria for the Common Building Types in Table 3-1 and limitations in Table 3-2. Where these two procedures are permitted and selected for use, the evaluation process must begin with a Tier 1 (Section 3.3.2), followed by the Tier 2 (Section 3.3.3) as warranted.

Where the Tier 1 and Tier 2 procedures are not permitted based on Section 3.3 or by the authority having jurisdiction or where the design professional chooses to conduct a more detailed evaluation, a Tier 3 evaluation shall be conducted in accordance with Section 3.3.4.

1.4.5 Evaluation Report Where required by the authority having jurisdiction or if desired by the design professional, building owner, or client, an evaluation report shall be prepared after a seismic evaluation has been performed. When such a report is required, it shall include, at a minimum, the following items:

1. Scope and Intent: The purpose for the evaluation including jurisdiction requirements (if any), a summary of the evaluation procedure(s) used, and level of investigation conducted
2. Site and Building Data:
   a. General building description (including number of stories and dimensions)
   b. Structural system description (framing, seismic-force-resisting system, floor and roof diaphragm construction, basement, and foundation system)
   c. Nonstructural systems description (all nonstructural elements that affect seismic performance of the building or whose failure could cause serious life-threatening injuries to occupants or those near the structure)
   d. Common Building Type
   e. Performance Level
   f. Level of seismicity
   g. Soil type
3. List of Assumptions: Material properties, site soil conditions
4. Findings: A list of seismic deficiencies identified

C1.4.5 Evaluation Report The evaluation report serves to communicate the results to the owner or client and record the process and assumptions used to complete the evaluation. Each section should be carefully written in a manner that is understandable to its intended audience. The extent of the report may range from a letter to a detailed document. Depending on the availability of information and the scope of the evaluation effort, the final report may include the following items (in addition to the required items):

1. Site and Building Data:
   a. Building occupancy and use
   b. Level of inspections and testing conducted
   c. Availability of original design and construction documents
   d. Historical significance
   e. Past performance of the building type in earthquakes
2. Recommendations: Mitigation schemes or further evaluation
3. Appendix: References, preliminary calculations, photographs, material test results, all necessary checklists, summary data sheet, and analysis procedure

1.5 SEISMIC RETROFIT PROCESS

Seismic retrofit design of an existing building shall be conducted in accordance with the process outlined in Sections 1.5.1 through 1.5.10.

C1.5 SEISMIC RETROFIT PROCESS

The steps are presented in this section in the order in which they would typically be followed in the retrofit process. However, the criteria for performing these steps are presented in a somewhat different order to facilitate presentation of the concepts.

Figure C1-2 depicts the retrofit process specified in this standard and shows specific chapter references in parentheses at points where input from this standard is to be obtained. Although Fig. C1-2 is written for voluntary retrofits, it can also be used as a guide for mandatory retrofits.

This standard requires the selection of a Performance Objective for a building that has been previously identified as needing seismic retrofit.

Before embarking on a retrofit program, an evaluation should be performed to determine whether the building, in its existing condition, has the desired seismic performance capability. This standard contains an evaluation methodology as summarized in Section 1.4 that may be used for this purpose. Evaluations can also be performed in accordance with other means that are acceptable to the owner and the authority having jurisdiction. Such acceptable means could include qualitative review by a design professional of a building that is of a type that has performed poorly in past earthquakes. However, the determination of retrofit scope requires some process for identifying specific deficiencies to be mitigated for a selected Performance Objective.

1.5.1 Initial Considerations Before beginning a seismic retrofit design, a seismic evaluation shall be performed to identify the seismic deficiencies relative to the selected Performance Objective. This evaluation may be performed in accordance with Section 1.4 or by other approved methods.

C1.5.1 Initial Considerations The process of building retrofit will be simplified and made more efficient if information that significantly affects the retrofit design is obtained and considered before beginning the process. Retrofit requirements mandated by the authority having jurisdiction would be particularly important to determine in the initial stages of a project.

Unless already completed for a prior seismic evaluation (see Section C1.4), the design professional is encouraged to review the initial considerations with the authority having jurisdiction to determine any restrictions that exist on the design of retrofit measures. Initial considerations include structural characteristics of the building, seismic hazards including geologic site hazards known to be present at the site, results of prior seismic evaluations, building use and occupancy requirements, historic status, economic considerations, societal issues, and local jurisdictional requirements.

The building owner should be aware of the range of costs and impacts of retrofit, including both the variation associated with different Performance Objectives and the potential additional costs often associated with seismic retrofit, such as other life

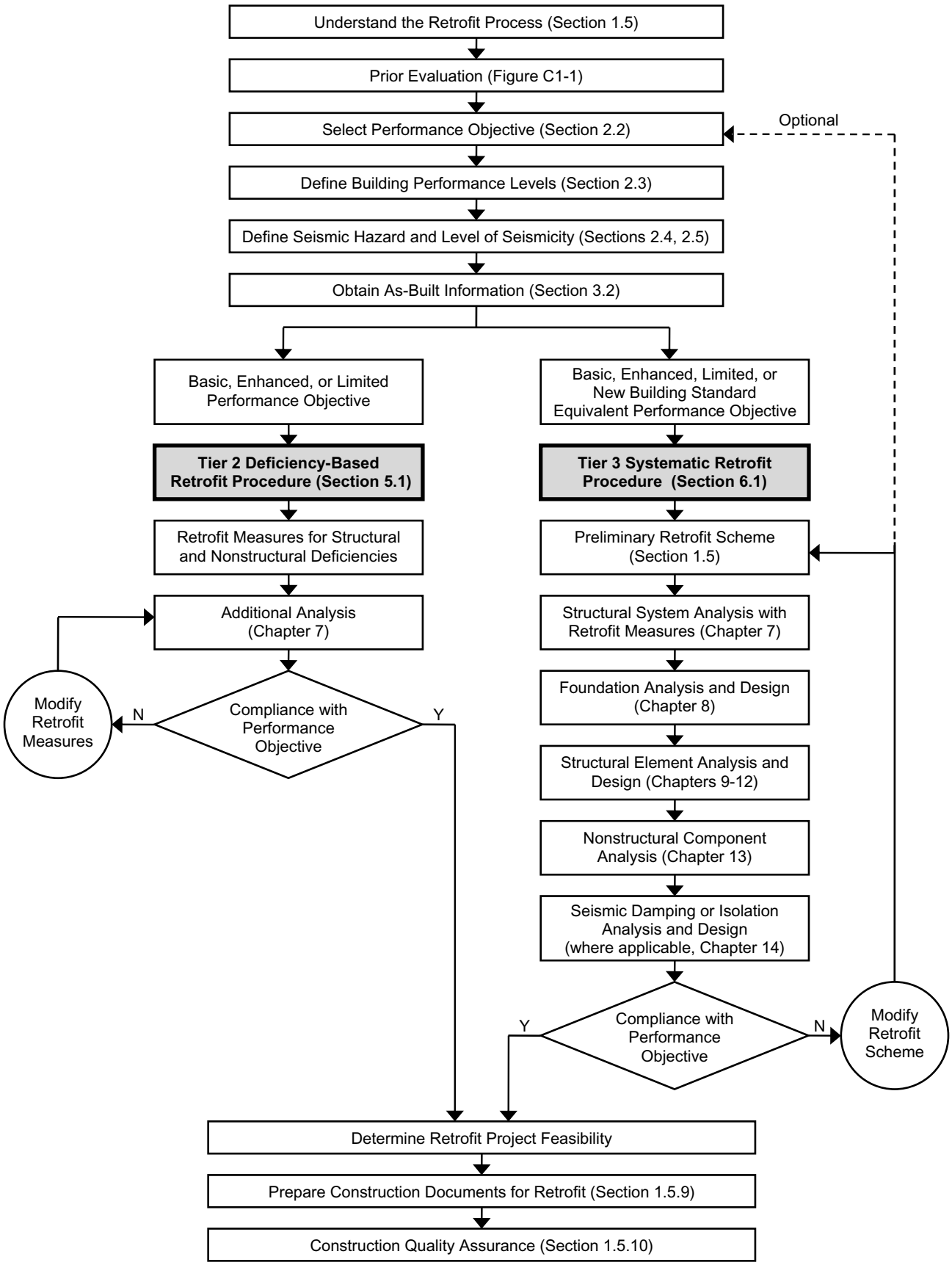

FIG. C1-2. Retrofit Process

safety upgrades, hazardous material removal, work associated with the Americans with Disabilities Act, and nonseismic building remodeling. Also to be considered are potential federal tax incentives for the retrofit of historic buildings and for some other older nonresidential buildings.

Seismic hazards other than ground shaking may exist at the building site. The risk and possible extent of damage from geologic site hazards identified in Section 8.2.2 should be considered before undertaking a retrofit aimed solely at reducing damage caused by shaking. In some cases it may be feasible to mitigate the site hazard or retrofit the building and still meet the selected performance level. In other cases, the risk caused by site hazards may be so extreme and difficult to control that retrofit is neither cost-effective nor feasible.

The use of the building must be considered in weighing the significance of potential temporary or permanent disruptions associated with various risk-mitigation schemes. Other limitations on modifications to the building caused by historic or aesthetic features must also be understood. The historic status of every building at least 50 years old should be determined (see Appendix B, Considerations for Historic Buildings). This determination should be made early as it could influence the choices of retrofit approaches and techniques.

There are many ways to reduce seismic risk, whether the risk is to property, life safety, or postearthquake use of the building. The occupancy of vulnerable buildings can be reduced, redundant facilities can be provided, and nonhistoric buildings can be demolished and replaced. The risks posed by nonstructural components and contents can be reduced. Seismic site hazards other than shaking can be mitigated.

Most often, however, when all alternatives are considered, the options of modifying the building to reduce the risk of damage should be studied. Such corrective measures include stiffening or strengthening the structure, adding local components to eliminate irregularities or tie the structure together, reducing the demand on the structure through the use of seismic isolation or energy dissipation devices, and reducing the height or mass of the structure. Retrofit strategies are discussed in Section 1.5.6.

1.5.2 Selection of Performance Objective A seismic Performance Objective shall be selected for the building in accordance with Section 2.2.

C1.5.2 Selection of Performance Objective The determination of the Performance Objective differs depending on whether the retrofit is mandated or voluntary. For a voluntary building retrofit, the building owner shall select a seismic retrofit for the building as specified in Section 2.2. In a mandated retrofit project, the minimum retrofit objective is either stipulated directly by local code or ordinance or the code official is provided with guidelines for negotiating the retrofit objective.

Because almost all structural seismic retrofit work requires a building permit, the code official will become an important part of the process. For voluntary retrofit efforts, the building owner and the code official need to come to agreement about the intended retrofit objective. The code official will verify that the proposed voluntary upgrade does violate any other regulatory, building code or policy requirements or trigger additional code stipulated work. For jurisdictionally required retrofit efforts, whether caused by passive or active programs (see Appendix B), the code official will verify that the required objective is met. Because the approaches and technology of this standard are not yet in the mainstream of design and construction practices of the United States, it is imperative that the code official either develop the expertise in this methodology or utilize a peer review type of process to verify the appropriate application of this standard. A jurisdiction must also remain flexible and open to other approaches to evaluation and retrofit, which may provide a reasonable assurance of meeting the appropriate Performance Objective.

1.5.3 Level of Seismicity The level of seismicity of the building shall be determined in accordance with Section 2.5.

1.5.4 As-Built Information As-built information for the building shall be obtained and a site visit shall be conducted as specified in Section 3.2 and the applicable sections of Chapters 5 or 6.

For a Tier 2 deficiency-based evaluation or retrofit, the as-built information shall include the classification of Common Building Type in accordance with Section 3.2.1. For a Tier 3 systematic evaluation or retrofit, configuration, dimensions, and materials properties shall be determined consistent with the material requirements Chapters 6 through 14.

1.5.5 Retrofit Procedures The selection and applicability of Tier 2 or Tier 3 retrofit procedures shall be determined in accordance with Section 3.3 based on the selected Performance Objective, level of seismicity, and Common Building Type.

C1.5.5 Retrofit Procedures Retrofit procedures include the Tier 2 Deficiency-Based Retrofit procedures or the Tier 3 Systematic Retrofit procedures. These procedures are defined in Section 3.3 and further explained in the associated commentary of that section.

This standard is arranged such that there are four analysis procedures that can be used, including the Linear Static Procedure, Linear Dynamic Procedure, Nonlinear Static Procedure, and Nonlinear Dynamic Procedure. The linear analysis procedures are intended to provide a conservative estimate of building response and performance in an earthquake. Because the actual response of buildings to earthquakes is not typically linear, the nonlinear analysis procedures should provide a more accurate representation of building response and performance. In recognition of the improved representation of building behavior when nonlinear analysis is conducted, the nonlinear procedures have less conservative limits on permissible building response than do linear procedures. Buildings that are found to be seismically deficient based on linear analysis may comply with this standard if a nonlinear analysis is performed. Therefore, performing a nonlinear analysis can minimize or eliminate unnecessary seismic retrofit and potentially lower construction costs.

Nonlinear analysis procedures are more complicated, take more time to implement, and require a considerable amount of expertise to properly implement. The requirements for nonlinear analysis application to a specific structural system may involve subtle and exacting modeling assumptions that should be reviewed in context to assure that they are consistent with current knowledge and understanding. The owner or reviewing officials should take care to institute qualified, independent technical review procedures and actions where the consequences of the analysis overturn earlier assessments of unacceptable performance. Indeed, it may be prudent to institute independent technical peer review for most such analyses-based designs. Often it is advisable to institute independent peer review at the beginning of the analysis rather than at the end; this avoids disputes when the budget has been spent and technical issues not satisfactorily resolved.

1.5.6 Retrofit Strategies The targeted Performance Objective shall be achieved by designing retrofit measures based on a strategy of addressing deficiencies identified by a prior seismic

evaluation. Each retrofit measure shall be evaluated in conjunction with other retrofit measures, and the existing structure as a whole, to assure that the modified building achieves the target Performance Objective. The effects of building modifications on stiffness, strength, yield behavior, and deformability shall be taken into account in an analytical model of the retrofitted structure. The compatibility of new and existing components shall be checked at displacements consistent with the demands produced by the selected Seismic Hazard Level and geologic site hazards present at the site.

One or more of the following strategies shall be permitted as retrofit measures.

- Local modification of components
- Removal or reduction of existing irregularities
- Global structural stiffening
- Global structural strengthening
- Mass reduction
- Seismic isolation, in accordance with Chapter 14
- Supplemental energy dissipation, in accordance with Chapter 14
- Other retrofit strategies approved by the authority having jurisdiction

C1.5.6 Retrofit Strategies Although not specifically required by any of the strategies, it is very beneficial for the retrofitted seismic-force-resisting system to have an appropriate level of redundancy so that any localized failure of a few components of the system will not result in local collapse or an instability. This should be considered when developing retrofit designs.

Local Modification of Components. Some existing buildings have substantial strength and stiffness, but some of their components may not have adequate strength, toughness, or deformation capacity to satisfy the Performance Objectives. An appropriate strategy for such structures may be to perform local modifications of components that are inadequate while retaining the basic configuration of the building's seismic-force-resisting system. Local modifications that can be considered include improvement of component connectivity, component strength, component deformation capacity, or all three. This strategy tends to be the most economical retrofit approach where only a few of the building's components are inadequate.

Local strengthening allows one or more under-strength components or connections to resist the strength demands predicted by the analysis without affecting the overall response of the structure. This could include measures such as cover plating steel beams or columns, or adding wood structural panel sheathing to an existing timber diaphragm. Such measures increase the strength of the component and allow it to resist more earthquake-induced force before the onset of damage.

Local corrective measures that improve the deformation capacity or ductility of a component allow it to resist large deformation levels with reduced amounts of damage, without necessarily increasing the strength. One such measure is placement of a confinement jacket around a reinforced concrete column to improve its ability to deform without spalling or degrading reinforcement splices. Another measure is reduction of the cross-section of selected structural components to increase their flexibility and response displacement capacity.

Removal or Reduction of Existing Irregularities. Removal or reduction of existing irregularities may be an effective retrofit strategy if a seismic evaluation shows that the irregularities result in the inability of the building to meet the selected Structural Performance Objective.

The results of analysis should be reviewed to detect existing irregularities. Stiffness, mass, and strength irregularities may be detected by reviewing the results of a linear analysis, by examining the distribution of structural displacements and DCRs, or by reviewing the results of a nonlinear analysis by examining the distribution of structural displacements and inelastic deformation demands. If the distribution of values of structural displacements, DCRs, or inelastic deformation demands predicted by the analysis is nonuniform with disproportionately high values within one story relative to the adjacent story, or at one side of a building relative to the other, then an irregularity exists.

Such irregularities are often, but not always, caused by the presence of a discontinuity in the structure, such as termination of a perimeter shear wall above the first story. Simple removal of the irregularity may be sufficient to reduce demands predicted by the analysis to acceptable levels. However, removal of discontinuities may be inappropriate in the case of historic buildings, and the effect of such alterations on important historic features should be considered carefully.

Effective corrective measures for removal or reduction of irregularities, such as soft or weak stories, include the addition of braced frames or shear walls within the soft or weak story. Torsional irregularities can be corrected by the addition of moment frames, braced frames, or shear walls to balance the distribution of stiffness and mass within a story. Discontinuous components such as columns or walls can be extended through the zone of discontinuity.

Partial demolition can also be an effective corrective measure for irregularities, although this obviously has significant impact on the appearance and utility of the building, and this may not be an appropriate alternative for historic structures. Portions of the structure that create the irregularity, such as setback towers or side wings, can be removed. Expansion joints can be created to transform a single irregular building into multiple regular structures; however, care must be taken to avoid the potential problems associated with pounding.

Global Structural Stiffening. Global stiffening of the structure may be an effective retrofit strategy if the results of a seismic evaluation show deficiencies attributable to excessive lateral deflection of the building and critical components do not have adequate ductility to resist the resulting deformations. Construction of new braced frames or shear walls within an existing structure are effective measures for adding stiffness.

Global Structural Strengthening. Global strengthening of the structure may be an effective retrofit strategy if the results of a seismic evaluation show unacceptable performance attributable to a global deficiency in structural strength. This can be identified where the onset of global inelastic behavior occurs at levels of ground shaking that are substantially less than the selected level of ground shaking, or large DCRs (or inelastic deformation demands) are present throughout the structure. By providing supplemental strength to such a seismic-force-resisting system, it is possible to raise the threshold of ground motion at which the onset of damage occurs. Shear walls and braced frames are effective elements for this purpose, but they may be significantly stiffer than the structure to which they are added, requiring them to provide nearly all of the structure's lateral resistance. Moment-resisting frames, being more flexible, may be more compatible with existing elements in some structures; however, such flexible elements may not become effective in the building's response until existing brittle elements have already been damaged.

Mass Reduction. Mass reduction may be an effective retrofit strategy if the results of a seismic evaluation show deficiencies attributable to excessive building mass, global structural flexibility, or global structural weakness. Mass and stiffness control the amount of force and deformation induced in a structure by

ground motion. Reductions in mass can result in direct reductions in both the amount of force and the deformation demand produced by earthquakes and, therefore, can be used in lieu of structural strengthening and stiffening. Mass can be reduced through demolition of upper stories, replacement of heavy cladding and interior partitions, or removal of heavy storage and equipment loads.

Seismic Isolation. Seismic isolation may be an effective retrofit strategy if the results of a seismic evaluation show deficiencies attributable to excessive seismic forces or deformation demands, or if it is desired to protect important contents and nonstructural components from damage. Where a structure is seismically isolated, compliant bearings are inserted between the superstructure and its foundations. This produces a system (structure and isolation bearings) with a nearly rigid body translation of the structure above the bearings. Most of the deformation induced in the isolated system by the ground motion occurs within the compliant bearings, which are specifically designed to resist these concentrated displacements. Most bearings also have excellent energy dissipation characteristics (damping). Together, this results in greatly reduced demands on the existing structural and nonstructural components of the building and its contents. For this reason, seismic isolation is often an appropriate strategy to achieve Enhanced Performance Objectives that include the protection of historic fabric, valuable contents, and equipment, or for buildings that contain important operations and functions. This technique is most effective for relatively stiff buildings with low profiles and large mass. It is less effective for light, flexible structures.

Supplemental Energy Dissipation. Installation of supplemental energy dissipation devices may be an effective retrofit strategy if the results of a seismic evaluation show deficiencies attributable to excessive deformations caused by global structural flexibility in a building. Many available technologies allow the energy imparted to a structure by ground motion to be dissipated in a controlled manner through the action of special devices—fluid viscoelastic dampers (hydraulic cylinders), yielding plates, or friction pads—resulting in an overall reduction in the displacements of the structure. The most commonly used devices dissipate energy through frictional, hysteretic, or viscoelastic processes. To dissipate substantial energy, dissipation devices typically must undergo significant deformation (or stroke), which requires that the structure experience substantial lateral displacements. Therefore, these systems are most effective in structures that are relatively flexible and have some inelastic deformation capacity. Energy dissipaters are most commonly installed in structures as components of braced frames. Depending on the characteristics of the device, either static or dynamic stiffness is added to the structure as well as energy dissipation capacity (damping). In some cases, although the structural displacements are reduced, the forces delivered to the structure can actually be increased.

1.5.7 Retrofit Measures Retrofit measures shall be designed using the applicable retrofit procedures and requirements.

1.5.8 Verification of Retrofit Design The design of retrofit measures shall be verified to meet the requirements of this standard through an analysis of the building including the retrofit measures. The analysis shall be consistent with the applicable retrofit procedures specified in Section 3.3. A separate analytical evaluation shall be performed for each combination of building performance and seismic hazard specified in the selected Performance Objective.

If the design of retrofit measures fails to comply with the acceptance criteria for the selected Performance Objective, the retrofit measures shall be redesigned or an alternative retrofit strategy with a different Performance Objective shall be implemented. This process shall be repeated until the design is in compliance with the acceptance criteria for the selected Performance Objective.

C1.5.8 Verification of Retrofit Design An analysis of the building with all proposed retrofit measures included should demonstrate that all elements meet the acceptance criteria for the Performance Objective being targeted. When an element does not meet the performance requirements specified in the standard, the element or the structure as a whole can be modified or one can show that the element's behavior does not affect the performance of the building. If the element's failure does not have a deleterious effect on other elements, compromise the support of gravity load, and compromise the achievement of the total structure meeting the Performance Objective, then the element need not be modified. Analysis must be performed to justify those conclusions, which includes an analysis of performance of the building without reliance on any gravity and lateral load resistance characteristics of the element under consideration before its failure.

1.5.9 Construction Documents If the design of retrofit measures meets the acceptance criteria for the selected Performance Objective, and the decision is made to proceed with the retrofit, construction documents shall be prepared and shall include requirements for construction quality assurance in accordance with Section 1.5.10.

C1.5.9 Construction Documents At this stage, a cost estimate can be made to review the economic acceptability of the design. Cost estimating or reviewing economic acceptability of the retrofit design is not included in this standard, but is an essential part of the retrofit process shown in Figure C1-2.

If the design proves uneconomical or otherwise not feasible, further refinement may be considered in analysis, a different retrofit scheme may be designed or a different Performance Objective may be considered.

A successful retrofit project requires a good set of construction documents with a quality assurance program to ensure that the design is implemented properly. Section 1.5.10 specifies provisions for a quality assurance program during the construction or implementation of the retrofit design. Other aspects of the implementation process, including details of the preparation of construction documents, obtaining a building permit, selection of a contractor, details of historic preservation techniques for particular kinds of materials, and financing are not covered in this standard.

1.5.10 Construction Quality Assurance Construction of seismic retrofit work shall be checked for quality of construction and general compliance with the intent of the plans and specifications of the retrofit design. Construction quality assurance shall conform to the requirements of this section and the additional testing and inspection requirements of the governing regulations, building code or policies and reference standards of Chapters 8 through 14.

C1.5.10 Construction Quality Assurance The design professional responsible for the seismic retrofit of a specific building may find it appropriate to specify more stringent or more detailed requirements. Such additional requirements may be particularly appropriate for those buildings having Enhanced Performance Objectives.

1.5.10.1 Construction Quality Assurance Plan A Quality Assurance Plan (QAP) shall be prepared by the design professional

and approved by the authority having jurisdiction. The QAP shall identify components of the work that are subject to quality assurance procedures and identify special inspection, testing, and observation requirements to confirm construction quality, including also those requirements of the applicable code. The QAP shall also include a process for modifying the retrofit design to reflect unforeseen conditions discovered during construction that maintains achievement of the Performance Objective for the building.

C1.5.10.1 Construction Quality Assurance Plan The quality assurance plan (QAP) should, as a minimum, include the following:

1. Required contractor quality control procedures; and
2. Required design professional construction quality assurance services, including but not limited to the following:
   2.1. Review of required contractor submittals;
   2.2. Monitoring of required inspection reports and test results;
   2.3. Construction consultation as required by the contractor on the intent of the construction documents; and
   2.4. Construction observation in accordance with Section 1.5.10.2.1.

1.5.10.2 Construction Quality Assurance Requirements

1.5.10.2.1 Requirements for the Design Professional The design professional shall be responsible for preparing the QAP applicable to the portion of the work for which they are in responsible charge, overseeing the implementation of the plan and reviewing special inspection and testing reports.

The design professional shall be responsible for performing periodic structural observation of the retrofit work. Structural observation shall be performed at significant stages of construction and shall include visual observation of the work for substantial conformance with the construction documents and confirmation of conditions assumed during design. Such structural observation shall be performed in addition to any special inspection and testing that is otherwise required for the work.

The design professional shall be responsible for modifying the retrofit design to reflect conditions discovered during construction to maintain the targeted Performance Objective by the modified design.

C1.5.10.2.1 Requirements for the Design Professional Following structural observations, the design professional should report any observed deficiencies in writing to the owner's representative, the special inspector, the contractor, and the code official. Upon completion of the work, the design professional should submit to the authority having jurisdiction a written statement attesting that the site visits have been made and identifying any reported deficiencies that, to the best of the structural construction observer's knowledge, have not been resolved or rectified.

1.5.10.2.2 Special Inspection The owner shall engage the services of a special inspector to observe construction of the following retrofit work:

1. The governing regulation, building code, or policy.
2. If no governing regulation, building code, or policy exists, items designated in Section 11A.1.3 of ASCE 7.
3. Other work designated for such special inspection by the design professional or the authority having jurisdiction.

C1.5.10.2.2 Special Inspection The special inspector should be a qualified person who should demonstrate competence, to the satisfaction of the authority having jurisdiction, for inspection of the particular type of construction or operation requiring special inspection.

1.5.10.2.3 Testing The special inspector shall be responsible for verifying that special test requirements, as described in the QAP, are performed by an approved testing agency for the following retrofit work:

1. Work described in Section 11A.2 of ASCE 7,
2. Other work designated for such testing by the design professional or the authority having jurisdiction.

1.5.10.2.4 Reporting and Compliance Procedures The special inspector shall furnish copies of progress reports to the owner's representative and the design professional, noting any uncorrected deficiencies and corrections of previously reported deficiencies. All observed deficiencies shall be brought to the immediate attention of the contractor for correction.

Upon completion of construction, the special inspector shall submit a final report to the owner's representative and the design professional, indicating the extent to which inspected work was completed in accordance with approved construction documents. Noncompliant work shall have been corrected before completion of construction.

1.5.10.3 Responsibilities of the Authority Having Jurisdiction The authority having jurisdiction shall be responsible for reviewing and approving the QAP and specifying minimum special inspection, testing, and reporting requirements.

C1.5.10.3 Responsibilities of the Authority Having Jurisdiction The authority having jurisdiction should act to enhance and encourage the protection of the public that is represented by such retrofit. These actions should include those described in the following subsections.

Construction Document Submittals—Permitting. As part of the permitting process, the authority having jurisdiction should require that construction documents be submitted for a permit to construct the proposed seismic retrofit measures. The documents should include a statement of the design basis for the retrofit, drawings (or adequately detailed sketches), structural/seismic calculations, and a QAP as recommended by Section 1.5.10.1. Appropriate structural construction specifications are also recommended if structural requirements are not adequately defined by notes on drawings.

The authority having jurisdiction should require that it be demonstrated (in the design calculations, by third-party review, or by other means) that the design of the seismic retrofit measures has been performed in conformance with local building regulations, the stated design basis, the intent of this standard, accepted engineering principles, or all of the elements. The authority having jurisdiction should be aware that compliance with the building code provisions for new structures is often not possible and is not required by this standard. It is not intended that the authority having jurisdiction assure compliance of the submittals with the structural requirements for new construction.

The authority having jurisdiction should maintain a permanent public file of the construction documents submitted as part of the permitting process for construction of the seismic retrofit measures.

Construction Phase Role. The authority having jurisdiction should monitor the implementation of the QAP. In particular, the following actions should be taken:

1. Files of inspection reports should be maintained for a defined length of time following completion of construction

and issuance of a certificate of occupancy. These files should include both reports submitted by special inspectors employed by the owner, as in Section 1.5.10.2.2, and those submitted by inspectors employed by the authority having jurisdiction;

2. Before issuance of a certificate of occupancy, the authority having jurisdiction should ascertain that either all reported noncompliant aspects of construction have been rectified, or such noncompliant aspects have been accepted by the design professional in responsible charge as acceptable substitutes that are consistent with the general intent of the construction documents; and
3. Files of test reports prepared in accordance with Section 1.5.10.2.4 should be maintained for a defined length of time following completion of construction and issuance of a certificate of occupancy.

CHAPTER 2
PERFORMANCE OBJECTIVES AND SEISMIC HAZARDS

2.1 SCOPE

The selection of a Performance Objective shall be in accordance with Section 2.2 using target Building Performance Levels for structural and nonstructural components in Section 2.3 and Seismic Hazard Levels in Section 2.4. Where required by this standard, the Level of Seismicity shall be determined in accordance with Section 2.5.

2.2 PERFORMANCE OBJECTIVES

A Performance Objective shall consist of one or more pairings of a selected Seismic Hazard Level, as defined in Section 2.4, with a target Structural Performance Level and a target Nonstructural Performance Level, defined in Sections 2.3.1 and 2.3.2, respectively.

C2.2 PERFORMANCE OBJECTIVES

Performance Objectives shall be selected considering basic, enhanced, limited, or partial objectives, as defined in Sections 2.2.1 through 2.2.3, or an objective intended to be equivalent with the provisions for new buildings, as defined in Section 2.2.4. Recommendations regarding the selection of a Performance Objective for any building are beyond the scope of this standard. FEMA 274 (1997b) discusses issues to consider when combining various Performance and Seismic Hazard Levels. It should be noted that not all combinations constitute reasonable or cost-effective Performance Objectives.

This standard sets forth myriad Performance Objectives, including specific objectives that are intended to be equivalent to the performance objectives of buildings designed to new building standards and specific objectives that are intended to mimic the performance historically accepted for what is deemed "reduced code performance" in documents such as the *International Existing Building Code* (ICC 2012). These performance objectives provide Structural and Nonstructural Performance Levels at specifically defined Seismic Hazard Levels for buildings based on the different Risk Categories a building could be classified in based on the *International Building Code* (ICC 2012) or ASCE 7. Determination of which Risk Category a building should be classified in is outside of the scope of this document.

Building performance can be described qualitatively in terms of the safety afforded to building occupants during and after the event; the cost and feasibility of restoring the building to its pre-earthquake condition; the length of time the building is removed from service to effect repairs; and economic, architectural, or historic effects on the larger community. These performance characteristics are directly related to the extent of damage that would be sustained by the building and its systems in the seismic event.

In this standard, the extent of damage to a building in a specified earthquake ground motion for which performance evaluations is defined as a Building Performance Level.

This standard uses several probabilistic Seismic Hazard Levels to describe earthquake ground motions for which performance evaluations are made, except in certain areas near active faults, where deterministic caps are imposed on the probabilistic hazard parameters. Such ground motions are often referred to either as a probability of exceedance in a specified time period, say 20% probability of exceedance in 50 years, or as a return period for exceedance of the specified ground motion, such as 225 years. Table C2-1 shows the ground motion probabilities of exceedance and corresponding return period used in this standard.

This standard explicitly sets forth four Seismic Hazard Levels in Section 2.4.

The Performance Objective selected as a basis for design determines, to a great extent, the cost and feasibility of any project, and the benefit to be obtained in terms of improved safety, reduction in property damage, and interruption of use in the event of future earthquakes. Table C2-2 indicates the range of performance objectives that might be considered in use of this standard for a typical building, such as one classified under Risk Category II, based on the Performance Levels described in Section 2.3 and the Seismic Hazard Levels set forth in Section 2.4 for both structural and nonstructural system expected performance.

2.2.1 Basic Performance Objective for Existing Buildings (BPOE) The Basic Performance Objective for Existing Buildings (BPOE) is a specified performance objective that varies with Risk Category, as shown in Table 2-1, where the Risk Category is defined by the governing regulations, building code, or policy, or in lieu of any regulations, building code, or policy, per ASCE 7. Tier 1, Tier 2, or Tier 3 procedures may be used to demonstrate compliance with the BPOE, subject to the limitations on their use in Chapter 3. The Risk Categories shall be determined consistent with the applicable regulations, building code, or policy or in lieu of any regulations, building code, or policy, per ASCE 7.

C2.2.1 Basic Performance Objective for Existing Buildings (BPOE) The BPOE is one specific, named Performance Objective. This standard does not mandate specific Performance Objectives. It only defines them for use. The notation (S-N) in Table 2-1 is used where S and N are the respective Structural Performance Levels and Nonstructural Performance Levels, as defined in Sections 2.3.1 and 2.3.2.

Table C2-1. Probabililty of Exceedance and Mean Return Period

Probability of Exceedance	Mean Return Period (years)
50%/30 years	43
50%/50 years	72
20%/50 years	225
10%/50 years	475
5%/50 years	975
2%/50 years	2,475

Table C2-2. Performance Objectives

Target Building Performance Levels				
Seismic Hazard Level	Operational Performance Level (1-A)	Immediate Occupancy Performance Level (1-B)	Life Safety Performance Level (3-C)	Collapse Prevention Performance Level (5-D)
50%/50 years	a	b	c	d
BSE-1E (20%/50 years)	e	f	g	h
BSE-2E (5%/50 years)	i	j	k	l
BSE-2N (ASCE 7 MCE_R)	m	n	o	p

NOTES: Each cell in the above matrix represents a discrete Performance Objective.
The Performance Objectives in the matrix above can be used to represent the three specific Performance Objectives for a standard building that would be considered Risk Category I & II defined in Sections 2.2.1, 2.2.2, and 2.2.3, as follows:

Basic Performance Objective for Existing Buildings (BPOE)	g and l
Enhanced Objectives	g and i, j, m, n, o, or p l and e or f g and l and a, or b k, m, n, or o alone
Limited Objectives	g alone l alone c, d, e, or f

The BPOE varies by Risk Category. This standard does not specify how to assign a building to a Risk Category. Risk Categories are used here to facilitate the coordination with regulations, building codes, and policies, such as the *International Building Code* and the *International Existing Building Code*, which do use them. The intention is that regulations, building codes, and policies need to cover all Risk Categories but might prefer to cite this standard in a simple way. Defining the BPOE as in Table 2-1 allows a regulation, building code, or policy to simply cite the BPOE without creating its own table to spell out the Seismic Hazard Level and Performance Levels for each Risk Category.

The BPOE, or objectives close to it, has been used for characterizing seismic performance in other standards and regulations and has been implemented in many individual projects and mitigation programs. The BPOE also approximates the regulatory policy traditionally applied to existing buildings in many seismically active areas of the United States. The BPOE accepts a lower level of safety and a higher risk of collapse than would that provided by similar standards for new buildings. Buildings meeting the BPOE are expected to experience little damage from relatively frequent, moderate earthquakes but significantly more damage and potential economic loss from the most severe and infrequent earthquakes that could affect them. The level of damage and potential economic loss experienced by buildings rehabilitated to the BPOE likely will be greater than that expected in similar, properly designed and constructed new buildings or existing buildings evaluated and retrofit to the Basic Performance Objective Equivalent to New Building Standards (BPON) in Section 2.2.4.

There are three overarching historical reasons for accepting a somewhat greater risk in existing buildings:

- Accepting performance less than "full code" ensures that recent buildings are not immediately rendered deficient whenever the code changes in such a manner as to become more conservative.
- The increase in risk is tempered by the recognition that an existing building often has a shorter remaining life than a new building. That is, if the traditional code-based demand

Table 2-1. Basic Performance Objective for Existing Buildings (BPOE)

	Tier 1[a]	Tier 2[a]	Tier 3	
Risk Category	BSE-1E	BSE-1E	BSE-1E	BSE-2E
I & II	Life Safety Structural Performance Life Safety Nonstructural Performance (3-C)	Life Safety Structural Performance Life Safety Nonstructural Performance (3-C)	Life Safety Structural Performance Life Safety Nonstructural Performance (3-C)	Collapse Prevention Structural Performance Nonstructural Performance Not Considered (5-D)
III	See footnote *b* for Structural Performance Position Retention Nonstructural Performance (2-B)	Damage Control Structural Performance Position Retention Nonstructural Performance (2-B)	Damage Control Structural Performance Position Retention Nonstructural Performance (2-B)	Limited Safety Structural Performance Nonstructural Performance Not Considered (4-D)
IV	Immediate Occupancy Structural Performance Position Retention Nonstructural Performance (1-B)	Immediate Occupancy Structural Performance Position Retention Nonstructural Performance (1-B)	Immediate Occupancy Structural Performance Position Retention Nonstructural Performance (1-B)	Life Safety Structural Performance Nonstructural Performance Not Considered (3-D)

[a]For Tier 1 and 2 assessments, seismic performance for the BSE-2E is not explicitly evaluated.
[b]For Risk Category III, the Tier 1 screening checklists shall be based on the Life Safety Performance Level (S-3), except that checklist statements using the Quick Check procedures of Section 4.5.3 shall be based on MS-factors and other limits that are an average of the values for Life Safety and Immediate Occupancy.

for new buildings presumes a 50-year life, then an existing building with, say, a 30-year life has a smaller chance of experiencing the code-level event over its remaining years (or an equivalent chance of experiencing a somewhat smaller maximum event). This rationale is less applicable when the retrofit is part of a change of occupancy to a higher Risk Category, or where the retrofit is part of a major renovation that "renews" the building or is intended to substantially extend its useful life.

- The BPOE recognizes that the cost of achieving the higher level of certainty in performance that comes with "new building equivalence" is often disproportionate to the incremental benefit. For new construction, building code provisions ensure a high probability of safety in the design earthquake (as well as a reasonable expectation of reparability). Because of more complete design flexibility and construction quality control, the new building code can achieve that higher confidence for new buildings at marginal additional cost.

The constraints of existing buildings, however, often make the same level of performance reliability as a new building much more expensive. Therefore, whereas the BPOE seeks safety with reasonable confidence, it rationally reduces the incremental certainty of performance that comes cheaply with new construction but is costly for retrofit.

The traditional reasons for the lower performance objective might not apply in all cases. Nevertheless, the BPOE and similar objectives have been deemed appropriate for many mitigation programs and remain valuable for the precedent they provide. Where the desired (or required) performance is similar to that required of new buildings assigned to Risk Category III or IV in ASCE 7, the BPOE has not traditionally been used and might not be appropriate. For those buildings, the evaluation or retrofit performance objective has been to such a level consistent with a new building assigned to that Risk Category per Section 2.2.4. As noted in Section C2.2, however, the selection of what Performance Objective one should use is beyond the scope of this standard.

Past codes and guidelines allowed a higher risk similar to the BPOE by applying a reduction factor to the code-level force demand used to design the building. FEMA 178 (1992b), for example, modified the demand by factors of 0.67 or 0.85. This approach was retained in national model codes, such as the *International Building Code* and the *International Existing Building Code* (ICC 2012a and 2012b), which allow a 0.75 factor on earthquake loads for certain triggered evaluations or retrofit. ASCE 31-03 achieved approximately the same effect by increasing component capacities, *m*-factors, in its Tier 2 procedure from what the commensurate factors are in ASCE 41-06 and by applying a 0.75 factor to code-based demands in its Tier 3 procedure.

Many jurisdictions have adopted such reductions in their building regulations for a long time. The cities of Long Beach, Los Angeles, Oakland, and San Francisco are among many communities that have used the 0.75 reduction for many decades. The *California Building Code* (CBSC 2010a) has, since the 1998 edition, permitted the use of a lower probabilistic hazard for retrofit of state-owned buildings of 20% in 50 years, where the traditional 10% in 50-year hazard was used for new building design. In some cases, there have also been hazardous building ordinances that required owners to undertake seismic safety evaluations and seismic retrofit using seismic hazards less than those for new building design for these actions. Thus, there is a precedent both in standards formulation and enforced building regulations for using a reduced hazard for the evaluation and retrofit of existing buildings.

Simply reducing the ground motion demand by a factor of 0.75 does not result in a spatially uniform hazard because of differences in the seismic hazard curves for different locations. For example, reducing 2% in a 50-year ground motion parameter in San Francisco by 25% results in a ground motion parameter with approximately a 5% in 50-year probability of exceedance, whereas the same 25% reduction in the 2% in 50-year ground motion for Memphis results in an approximately 3% in 50-year hazard.

Therefore, this BPOE standard does not apply a single factor to the code-level demand. Instead, it specifies a different demand with a higher probability of exceedance. For new buildings, probabilities of exceedance of 2% in 50 years and 10% in 50 years have commonly been used (before the adoption of Risk-Targeted Maximum Considered Earthquake ground motions in ASCE 7). For the BPOE, this standard sets the Seismic Hazard Levels based on 5% in 50-year and 20% in 50-year probabilities of exceedance.

Tiers 1 and 2, as will be found in Chapters 4 and 5, provide means for evaluating the expected seismic performance of a building only for the Immediate Occupancy and Life Safety Performance Levels at the BSE-1E hazard. A commensurate check at the BSE-2E hazard is not included, so these tiers do not strictly include a two-level assessment, as the Tier 3 systematic procedure does.

The three-tiered evaluation procedure requires a successively more complete engineering assessment of the expected seismic performance of the building, with successively more effort to determine compliance. Tier 1 requirements tend to be general and conservative in nature, Tier 2 procedures are more detailed, and Tier 3 procedures are specific and involved.

When these tiers were formulated, it was expected that a Tier 1 assessment would identify more buildings as potentially unsafe than would a Tier 2 because it used more exacting standards and significantly more work. Similarly, it was expected that a full-building, systematic Tier 3 assessment would find some buildings that did not pass a Tier 2 assessment to be acceptable. In essence, these tiers have been formulated so that the likelihood of an error in assessing a building as acceptable in a lower tier is less than in a higher tier.

The Tier 1 and Tier 2 columns specify only that Structural Performance Levels at the BSE-1E Seismic Hazard Level be evaluated, whereas Tier 3 requires checks of Structural Performance Levels at the BSE-1E and BSE-2E Seismic Hazard Level. For example, when using Tier 1 or Tier 2 for a Risk Category II building, the Tier 1 and Tier 2 BPOE does not include an evaluation of the Structural Collapse Prevention Performance Level, whereas the Tier 3 BPOE does. For Tier 1 or Tier 2, Collapse Prevention with the BSE-2E hazard is implied by meeting the criteria for Life Safety Structural Performance Level with the BSE-1E hazard and the requirements in Chapter 3 that permit the use of Tier 1 and Tier 2 deficiency-based procedures. In other words, although Tier 1 and Tier 2 procedures do not explicitly address Collapse Prevention, they are deemed to comply with the full BPOE based on demonstrated compliance with the Life Safety portion.

The reason that Tier 1 and Tier 2 only need to have one seismic hazard check whereas Tier 3 requires a check of two hazard levels relates to the fundamental basis of the deficiency-based procedures. The deficiency-based procedures are based on decades of observations of actual damage to buildings in major earthquakes worldwide. The original documentation is contained in ATC-14 (1987). Because of a lack of specific strong motion

records, all events were considered equal even though many were likely BSE-2E level events. It is fair to conclude that because the procedures were calibrated to a BSE-1E level event and many of the buildings actually experienced a BSE-2E level event successfully, only a one-level check would be needed.

It is important to recognize that the inventory of damaged buildings used to infer the deficiency-based procedure was mostly of moderate size and height. The standard's committee felt that a similar limitation was needed to designate when the deficiency-only procedures could be used. A number of criteria regarding the building's size, structural system, and configuration were developed; these criteria must be met to be able to use the deficiency-based provisions.

The Tier 3 procedure was intended as a systematic procedure for all buildings, regardless of configuration size or structural system. This range includes complex buildings that could not be classified into one of the common building types from which the experience base for Tiers 1 and 2 were derived. For such buildings, where there are not sufficient observations of their performance from past earthquakes, a rigorous, full-building assessment should be conducted to ensure sufficient robustness and margin of safety beyond the design-level earthquake.

2.2.2 Enhanced Performance Objectives A seismic evaluation that demonstrates compliance with or a retrofit that provides building performance exceeding that of the BPOE is termed an Enhanced Performance Objective. Enhanced Performance Objectives shall be achieved using one or more of the following three methods:

1. Target Structural Performance Levels or Nonstructural Performance Levels that exceed those of the BPOE at the BSE-1E hazard level, the BSE-2E hazard level, or both given the building's Risk Category.
2. Target Structural Performance Levels or Nonstructural Performance Levels of the BPOE using a Seismic Hazard Level that exceeds either the BSE-1E or BSE-2E hazard levels, or both given the building's Risk Category.
3. Target Building Performance Levels of the BPOE using a Risk Category higher than the building would be assigned.

C2.2.2 Enhanced Performance Objectives Enhanced Performance Objectives can be obtained by using higher target Building Performance Levels, higher Seismic Hazard Levels, a higher Risk Rategory, or any combination thereof.

2.2.3 Limited Performance Objectives A performance objective less than that of the BPOE is termed a Limited Performance Objective. Limited Performance Objectives shall be achieved using a Reduced Performance Objective, specified in Section 2.2.3.1, or a Partial Retrofit Objective, specified in Section 2.2.3.2. Where a Limited Performance Objective is used for modifications of the building, the retrofit design shall

1. not result in a reduction in the Structural Performance Level or Nonstructural Performance Levels of the existing building for the same Seismic Hazard Level;
2. not create a new structural irregularity or make an existing structural irregularity more severe;
3. not result in an increase in the seismic forces to any component that is deficient in capacity to resist such forces; and
4. incorporate structural elements that are connected to the existing structure in compliance with the requirements of this standard.

C2.2.3 Limited Performance Objectives The goal of retrofit is to improve the earthquake performance of the building. A reduction in performance of individual components should not necessarily be a measure of the overall building performance. A partial or limited retrofit could increase forces on some noncritical components while improving the overall performance of the building.

2.2.3.1 Reduced Performance Objective A seismic evaluation or a retrofit that addresses the entire building structural and nonstructural systems, but uses a lower selected Seismic Hazard Level or lower target Building Performance Level than the BPOE, is termed a Reduced Performance Objective. The following objectives are deemed to be Reduced Performance Objectives:

1. Target Structural Performance Levels or Nonstructural Performance Levels that are less than those of the BPOE at the BSE-1E hazard level, the BSE-2E hazard level, or both, given the building's Risk Category.
2. Target Structural Performance Levels or Nonstructural Performance Levels of the BPOE using Seismic Hazard Levels that are less than either the BSE-1E or BSE-2E hazard levels, or both, given the building's Risk Category.
3. For a Tier 3 evaluation or retrofit, satisfying one, but not the other, Performance Level at the BSE-1E or BSE-2E, given the building's Risk Category.
4. Building Performance Levels using the BPOE for a lower Risk Category than the building would be assigned.

C2.2.3.1 Reduced Performance Objective Life Safety Building Performance at the BSE-1E hazard is a commonly used performance objective. Although it matches part of the BPOE, it might be considered a reduced objective for buildings that do not meet the limitations when Tier 1 and Tier 2 procedures can be used and a Tier 3 procedure is used because it ignores the other part of the BPOE, Collapse Prevention Building Performance at the BSE-2E.

2.2.3.2 Partial Retrofit Objective Retrofit that addresses a portion or portions of the building without evaluating or rehabilitating the complete lateral-force-resisting system is termed *partial retrofit*.

C2.2.3.2 Partial Retrofit Objective A partial retrofit should be designed and constructed assuming future completion of a Performance Objective intended to improve the performance of the entire structure. Care must be taken so that the partial retrofit does not decrease the performance of the entire building.

2.2.4 Basic Performance Objective Equivalent to New Building Standards (BPON) The Basic Performance Objective Equivalent to New Building Standards (BPON) is a specific performance objective to be used only with Tier 3 systematic evaluation or retrofit that varies with Risk Category, as shown in Table 2-2, where the risk category is defined by the governing regulations, building code, or policy, or in lieu of any regulations, building code, or policy, per ASCE 7.

C2.2.4 Basic Performance Objective Equivalent to New Building Standards (BPON) The BPON is intended to provide performance equivalent to that which is intended for new buildings designed to ASCE 7. This section relates the ASCE 7 Risk Categories to ASCE 41 Performance Pbjectives using Seismic Hazard Levels specified in ASCE 7. This Performance Objective classifies as a special case of the Enhanced Performance Objective using the terminology of Section 2.2 because it is greater than the BPOE. This Performance Objective is specifically set forth to provide guidance to the engineer, owner, or building official wishing to evaluate or retrofit to an equivalent performance objective as a new code-designed building.

The relationships in Table C2-3 provide guidance for relating new building performance using seismic performance terminology of this standard. Though this Performance Objective attempts to provide equivalent performance with new building design standards, the gravity load resisting and original lateral systems of an existing building, even after retrofit, are generally not as robust as those of a new building. This is the result of prescriptive requirements contained within the new building standards that might not have been present either in the original design standard to which the building was constructed or in the requirements of this standard. Use of this standard does not preclude the use of prescriptive detailing requirements required in current building design standards.

Therefore, compared with a similarly configured new building, there is a higher degree of uncertainty in obtaining the targeted performance objective for the existing building retrofitted according to the provisions of this standard than would be expected for a new building. The uncertainty is generally biased toward the new design standard producing a building that will perform better than the intended performance of the code. However, that degree of improved performance is variable and difficult to quantify. Conversely, the provisions of this standard can provide a more reliable and predictable assessment of the building's performance to design-level earthquake shaking.

The acceptance criteria for structural components given in this standard have not been directly calibrated to the expected performance of new building components designed to new building codes and standards.

Table 2-2. Basic Performance Objective Equivalent to New Building Standards (BPON)

Risk Category	Seismic Hazard Level: BSE-1N	Seismic Hazard Level: BSE-2N
I & II	Life Safety Structural Performance Position Retention Nonstructural Performance (3-B)	Collapse Prevention Structural Performance Nonstructural Performance Not Considered (5-D)
III	Damage Control Structural Performance Position Retention Nonstructural Performance (2-B)	Limited Safety Structural Performance Nonstructural Performance Not Considered (4-D)
IV	Immediate Occupancy Structural Performance Operational Nonstructural Performance (1-A)	Life Safety Structural Performance Nonstructural Performance Not Considered (3-D)

2.2.5 System-Specific Performance Procedures The system-specific performance procedures in Chapter 15 are permitted to be used to meet the Performance Objective as defined for that procedure in Chapter 15.

C2.2.5 System-Specific Performance Procedures System-specific performance procedures have traditionally been used to achieve a Reduced Performance or Partial Retrofit Objective where performance is less than the BPOE. Each procedure defines its Performance Objective at the beginning of each section in Chapter 15.

2.3 TARGET BUILDING PERFORMANCE LEVELS

A target Building Performance Level shall consist of a combination of a target Structural Performance Level from Section 2.3.1 and a target Nonstructural Performance Level from Section

Table C2-3. Damage Control and Building Performance Levels

	Target Building Performance Levels			
	Collapse Prevention Level (5-D)	Life Safety Level (3-C)	Immediate Occupancy Level (1-B)	Operational Level (1-A)
Overall damage	Severe	Moderate	Light	Very light
Structural components	Little residual stiffness and strength to resist lateral loads, but gravity load-bearing columns and walls function. Large permanent drifts. Some exits blocked. Building is near collapse in aftershocks and should not continue to be occupied.	Some residual strength and stiffness left in all stories. Gravity-load-bearing elements function. No out-of-plane failure of walls. Some permanent drift. Damage to partitions. Continued occupancy might not be likely before repair. Building might not be economical to repair.	No permanent drift. Structure substantially retains original strength and stiffness. Continued occupancy likely.	No permanent drift. Structure substantially retains original strength and stiffness. Minor cracking of facades, partitions, and ceilings as well as structural elements. All systems important to normal operation are functional. Continued occupancy and use highly likely.
Nonstructural components	Extensive damage. Infills and unbraced parapets failed or at incipient failure.	Falling hazards, such as parapets, mitigated, but many architectural, mechanical, and electrical systems are damaged.	Equipment and contents are generally secure but might not operate due to mechanical failure or lack of utilities. Some cracking of facades, partitions, and ceilings as well as structural elements. Elevators can be restarted. Fire protection operable.	Negligible damage occurs. Power and other utilities are available, possibly from standby sources.
Comparison with performance intended for typical buildings designed to codes or standards for new buildings, for the design earthquake	Significantly more damage and greater life safety risk.	Somewhat more damage and slightly higher life safety risk.	Less damage and low life safety risk.	Much less damage and very low life safety risk.

2.3.2. The target Building Performance Level is designated alphanumerically, as shown in Section 2.3.3.

C2.3 TARGET BUILDING PERFORMANCE LEVELS

Building performance is a combination of the performance of both structural and nonstructural components. Table C2-3 describes the approximate limiting levels of structural and nonstructural damage that might be expected of buildings evaluated or retrofitted to the levels defined in this standard. On average, the expected damage would be less. For comparative purposes, the estimated performance of a typical new building subjected to the BSE-1N level of shaking is indicated. Performance descriptions in Table C2-3 are estimates rather than precise predictions, and variation among buildings of the same target Building Performance Level must be expected.

Building performance in this standard is expressed in terms of target Building Performance Levels. These target Building Performance Levels are discrete damage states selected from among the infinite spectrum of possible damage states that buildings could experience during an earthquake. The particular damage states identified as target Building Performance Levels in this standard have been selected because they have readily identifiable consequences associated with the postearthquake disposition of the building that are meaningful to the building community. These consequences include the ability to resume normal functions within the building, the advisability of postearthquake occupancy, and the risk to life safety.

Because of inherent uncertainties in prediction of ground motion and analytical prediction of building performance, some variation in actual performance should be expected. Compliance with this standard should not be considered a guarantee of performance. Information on the reliability of achieving various performance levels can be found in Chapter 2 of FEMA 274 (1997b).

Table C2-4 describes damage patterns commonly associated with structural elements for Structural Performance Levels when the assessed seismic hazard has occurred. The damage states described in the table might occur in some elements at the Structural Performance Level, but it is unlikely that all of the damage states described will occur in all elements of a building at that Structural Performance Level. The descriptions of damage states do not replace or supplement the quantitative definitions of performance provided elsewhere in this standard and are not intended for use in postearthquake evaluation of damage or for judging the safety of, or required level of repair to, a structure after an earthquake. They are presented to assist engineers using this standard to understand the relative degrees of damage at each defined performance level.

Damage patterns in structural elements depend on the modes of behavior of those elements. More complete descriptions of damage patterns and levels of damage associated with damage levels can be found in other documents, such as FEMA 306 (1998b) for concrete and masonry wall buildings and FEMA 352 (2000c) for steel moment-frame buildings.

In Table C2-4, the difference between damage associated with Collapse Prevention and Life Safety Performance Levels is a matter of degree or certainty. For a given structure, the damage patterns and the locations of initial damage are similar for both Performance Levels, but damage at the Life Safety Performance Level is somewhat less extensive and, because of differences in quantitative acceptance criteria, less likely to give rise to collapse.

2.3.1 Structural Performance Levels and Ranges The Structural Performance Level of a building shall be selected from six discrete Structural Performance Levels and two intermediate Structural Performance Ranges defined in this section.

The discrete Structural Performance Levels are Immediate Occupancy (S-1), Damage Control (S-2), Life Safety (S-3), Limited Safety (S-4), Collapse Prevention (S-5), and Not Considered (S-6). Design procedures and acceptance criteria corresponding to these Structural Performance Levels shall be as specified in Chapters 4 through 14.

The intermediate Structural Performance Ranges are the Enhanced Safety Range and the Reduced Safety Range. Acceptance criteria for performance within the Enhanced Safety Structural Performance Range shall be obtained by interpolating between the acceptance criteria provided for the Immediate Occupancy and Life Safety Structural Performance Levels. Acceptance criteria for performance within the Reduced Safety Structural Performance Range shall be obtained by interpolating between the acceptance criteria provided for the Life Safety and Collapse Prevention Structural Performance Levels.

C2.3.1 Structural Performance Levels and Ranges Different structural performance requirements might be desired by individual building owners for specific buildings and time periods of concern. The first five Structural Performance Levels defined in this standard have been selected to correlate with the most commonly specified structural performance requirements. The specification of two Structural Performance Ranges allows design professionals with other requirements to create customized Building Performance Objectives.

Table C2-4 relates these Structural Performance Levels to the limiting damage states for common vertical and horizontal elements of lateral-force-resisting systems. Later sections of this standard specify design parameters (such as *m*-factors, component capacities, and inelastic deformation capacities) specified as limiting values for attaining these Structural Performance Levels for a selected earthquake demand.

The postearthquake state of the buildings described in these tables is for illustrative purposes to convey conceptually what earthquake damage correlates with the different performance levels. This table is not intended for and should not be used in the postearthquake safety evaluation process or as an expectation of postearthquake performance of a building evaluated or retrofit to this standard.

2.3.1.1 Immediate Occupancy Structural Performance Level (S-1) Structural Performance Level S-1, Immediate Occupancy, is defined as the postearthquake damage state in which a structure remains safe to occupy and essentially retains its preearthquake strength and stiffness. A structure in compliance with the acceptance criteria of this standard for Immediate Occupancy is expected to achieve this postearthquake state.

C2.3.1.1 Immediate Occupancy Structural Performance Level (S-1) Structural Performance Level S-1, Immediate Occupancy, means the postearthquake damage state in which only very limited structural damage has occurred. The basic vertical- and lateral-force-resisting systems of the building retain almost all of their preearthquake strength and stiffness. The risk of life-threatening injury as a result of structural damage is very low, and although some minor structural repairs might be appropriate, these repairs would generally not be required before reoccupancy. Continued use of the building is not limited by its structural condition but might be limited by damage or disruption to nonstructural elements of the building, furnishings, or equipment and availability of external utility services.

2.3.1.2 Enhanced Safety Structural Performance Range The Enhanced Structural Performance Range is defined as the

Table C2-4. Structural Performance Levels and Illustrative Damage

Seismic-Force-Resisting System	Type	Structural Performance Levels		
		Collapse Prevention (S-5)	Life Safety (S-3)	Immediate Occupancy (S-1)
Concrete frames	Primary elements	Extensive cracking and hinge formation in ductile elements. Limited cracking or splice failure in some nonductile columns. Severe damage in short columns.	Extensive damage to beams. Spalling of cover and shear cracking in ductile columns. Minor spalling in nonductile columns. Joint cracks.	Minor cracking. Limited yielding possible at a few locations. Minor spalling of concrete cover.
	Secondary elements	Extensive spalling in columns and beams. Limited column shortening. Severe joint damage. Some reinforcing buckled.	Major cracking and hinge formation in ductile elements. Limited cracking or splice failure in some nonductile columns. Severe damage in short columns.	Minor spalling in a few places in ductile columns and beams. Flexural cracking in beams and columns. Shear cracking in joints.
	Drift	Transient drift sufficient to cause extensive nonstructural damage. Extensive permanent drift.	Transient drift sufficient to cause nonstructural damage. Noticeable permanent drift.	Transient drift that causes minor or no nonstructural damage. Negligible permanent drift.
Steel moment frames	Primary elements	Extensive distortion of beams and column panels. Many fractures at moment connections, but shear connections remain intact. A few elements might experience partial fracture.	Hinges form. Local buckling of some beam elements. Severe joint distortion; isolated moment connection fractures, but shear connections remain intact.	Minor local yielding at a few places. No fractures. Minor buckling or observable permanent distortion of members.
	Secondary elements	Same as for primary elements.	Extensive distortion of beams and column panels. Many fractures at moment connections, but shear connections remain intact.	Same as for primary elements.
	Drift	Transient drift sufficient to cause extensive nonstructural damage. Extensive permanent drift.	Transient drift sufficient to cause nonstructural damage. Noticeable permanent drift.	Transient drift that causes minor or no nonstructural damage. Negligible permanent drift.
Braced steel frames	Primary and secondary elements	Extensive yielding and buckling of braces. Many braces and their connections might fail.	Many braces yield or buckle but do not totally fail. Many connections might fail.	Minor yielding or buckling of braces.
	Drift	Transient drift sufficient to cause extensive nonstructural damage. Extensive permanent drift.	Transient drift sufficient to cause nonstructural damage. Noticeable permanent drift.	Transient drift that causes minor or no nonstructural damage. Negligible permanent drift.
Concrete walls	Primary elements	Major flexural or shear cracks and voids. Sliding at joints. Extensive crushing and buckling of reinforcement. Severe boundary element damage. Coupling beams shattered and virtually disintegrated.	Some boundary element cracking and spalling and limited buckling of reinforcement. Some sliding at joints. Damage around openings. Some crushing and flexural cracking. Coupling beams: extensive shear and flexural cracks; some crushing, but concrete generally remains in place.	Minor diagonal cracking of walls. Coupling beams experience diagonal cracking.
	Secondary elements	Panels shattered and virtually disintegrated.	Major flexural and shear cracks. Sliding at construction joints. Extensive crushing. Severe boundary element damage. Coupling beams shattered and virtually disintegrated.	Minor cracking of walls. Some evidence of sliding at construction joints. Coupling beams experience x-cracks. Minor spalling.
	Drift	Transient drift sufficient to cause extensive nonstructural damage. Extensive permanent drift.	Transient drift sufficient to cause nonstructural damage. Noticeable permanent drift.	Transient drift that causes minor or no nonstructural damage. Negligible permanent drift.
Unreinforced masonry infill walls[a]	Primary and secondary	Extensive cracking and crushing; portions of outer wythe shed, some infill walls on the verge of falling out.	Extensive cracking and some crushing but wall remains in place. No falling units. Extensive crushing and spalling of veneers at corners of openings and configuration changes.	Minor cracking of masonry infills and veneers. Minor spalling in veneers at a few corner openings.
	Drift	Transient drift sufficient to cause extensive nonstructural damage. Extensive permanent drift.	Transient drift sufficient to cause nonstructural damage. Noticeable permanent drift.	Transient drift that causes minor or no nonstructural damage. Negligible permanent drift.

Continued

Table C2-4. *(Continued)*

Seismic-Force-Resisting System	Type	Structural Performance Levels		
		Collapse Prevention (S-5)	Life Safety (S-3)	Immediate Occupancy (S-1)
Unreinforced masonry (noninfill) walls	Primary elements	Extensive cracking; face course and veneer might peel off. Noticeable in-plane and out-of-plane offsets.	Major cracking. Noticeable in-plane offsets of masonry and minor out-of-plane offsets.	Minor cracking of veneers. Minor spalling in veneers at a few corner openings. No observable out-of-plane offsets.
	Secondary elements	Nonbearing panels dislodge.	Same as for primary elements.	Same as for primary elements.
	Drift	Transient drift sufficient to cause extensive nonstructural damage. Extensive permanent drift.	Transient drift sufficient to cause nonstructural damage. Noticeable permanent drift.	Transient drift that causes minor or no nonstructural damage. Negligible permanent drift.
Reinforced masonry walls	Primary elements	Crushing; extensive cracking. Damage around openings and at corners. Some fallen units.	Major cracking distributed throughout wall. Some isolated crushing.	Minor cracking. No out-of-plane offsets.
	Secondary elements	Panels shattered and virtually disintegrated.	Crushing; extensive cracking; damage around openings and at corners; some fallen units.	Same as for primary elements.
	Drift	Transient drift sufficient to cause extensive nonstructural damage. Extensive permanent drift.	Transient drift sufficient to cause nonstructural damage. Noticeable permanent drift.	Transient drift that causes minor or no nonstructural damage. Negligible permanent drift.
Wood stud walls	Primary elements	Connections loose. Nails partially withdrawn. Some splitting of members and panels. Sheathing pulled away from studs.	Moderate loosening of connections and minor splitting of members.	Distributed minor hairline cracking of gypsum and plaster veneers, primarily at door and window openings.
	Secondary elements	Sheathing sheared off. Let-in braces fractured and buckled. Framing split and fractured.	Connections loose. Nails partially withdrawn. Some splitting of members and panels.	Same as for primary elements.
	Drift	Transient drift sufficient to cause extensive nonstructural damage. Extensive permanent drift.	Transient drift sufficient to cause nonstructural damage. Noticeable permanent drift.	Transient drift that causes minor or no nonstructural damage. Negligible permanent drift.
Precast concrete walls	Primary elements	Some wall connection failures but no wall elements dislodged.	Local crushing and spalling at wall connections, but no gross failure of connections.	Minor working and cracking at connections.
	Secondary elements	Same as for primary elements.	Some connection failures but no elements dislodged.	Same as for primary elements.
	Drift	Transient drift sufficient to cause extensive nonstructural damage. Extensive permanent drift.	Transient drift sufficient to cause nonstructural damage. Noticeable permanent drift.	Transient drift that causes minor or no nonstructural damage. Negligible permanent drift.
Foundations	General	Significant settlement and tilting of buildings with shallow foundations or buildings on liquefiable soils.	Localized settlement of buildings with shallow foundations.	Minor settlement and negligible tilting.
Diaphragms	Metal deck	Large distortion with buckling of some units and tearing of many welds and seam attachments.	Some localized failure of welded connections of deck to framing and between panels. Minor local buckling of deck.	Connections between deck units and framing intact. Minor distortions.
	Wood	Large permanent distortion with partial withdrawal of nails and extensive splitting of elements.	Some splitting at connections. Loosening of sheathing. Observable withdrawal of fasteners. Splitting of framing and sheathing.	No observable loosening or withdrawal of fasteners. No splitting of sheathing or framing.
	Cast-in-place concrete	Extensive crushing and observable offset across many cracks.	Extensive cracking. Local crushing and spalling.	Distributed cracking. Some minor cracks of larger size.
	Precast concrete	Connections between units fail. Units shift relative to each other. Crushing and spalling at joints.	Extensive cracking. Local crushing and spalling.	Some minor cracking along joints.

[a]For limiting damage to frame elements of infill frames, refer to the rows for concrete or steel frames.

continuous range of damage states between the Life Safety Structural Performance Level (S-3) and the Immediate Occupancy Structural Performance Level (S-1).

C2.3.1.2 Enhanced Safety Structural Performance Range Design within the Enhanced Structural Performance Range might be desirable to minimize repair time and operation interruption, as a partial means of protecting valuable equipment and contents or to preserve important historic features when the cost of design for Immediate Occupancy is excessive.

2.3.1.2.1 Damage Control Structural Performance Level (S-2) Structural Performance Level S-2, Damage Control, is defined as a postearthquake damage state between the Life Safety

Structural Performance Level (S-3) and the Immediate Occupancy Structural Performance Level (S-1). Acceptance criteria for evaluation or retrofit based on the Damage Control Structural Performance Level shall be taken halfway between those for Life Safety Structural Performance (S-3) and Immediate Occupancy Structural Performance (S-1).

C2.3.1.2.1 Damage Control Structural Performance Level (S-2) The Damage Control Structural Performance Level is set forth as a midway point between Life Safety and Immediate Occupancy. It is intended to provide a structure with a greater reliability of resisting collapse and being less damaged than a typical structure, but not to the extent required of a structure designed to meet the Immediate Occupancy Performance Level.

Although this level is a numerically intermediate level between Life Safety and Immediate Occupancy, the two performance objectives are essentially different from each other. The primary consideration for Immediate Occupancy is that the damage is limited in such a manner as to permit reoccupation of the building, with limited repair work occurring while the building is occupied. The primary consideration for Life Safety is that a margin of safety against collapse be maintained and that consideration for occupants to return to the building is a secondary impact to the Life Safety objective being achieved. The Damage Control Performance Level provides for a greater margin of safety against collapse than the Life Safety Performance Level would. It might control damage in such a manner as to permit return to function more quickly than the Life Safety Performance Level, but not as quickly as the Immediate Occupancy Performance Level does.

2.3.1.3 Life Safety Structural Performance Level (S-3) Structural Performance Level S-3, Life Safety, is defined as the postearthquake damage state in which a structure has damaged components but retains a margin against the onset of partial or total collapse. A structure in compliance with the acceptance criteria specified in this standard for this Structural Performance Level is expected to achieve this state.

C2.3.1.3 Life Safety Structural Performance Level (S-3) Structural Performance Level S-3, Life Safety, means the postearthquake damage state in which significant damage to the structure has occurred but some margin against either partial or total structural collapse remains. Some structural elements and components are severely damaged, but this damage has not resulted in large falling debris hazards, either inside or outside the building. Injuries might occur during the earthquake; however, the overall risk of life-threatening injury as a result of structural damage is expected to be low. It should be possible to repair the structure; however, for economic reasons, this repair might not be practical. Although the damaged structure is not an imminent collapse risk, it would be prudent to implement structural repairs or install temporary bracing before reoccupancy.

2.3.1.4 Reduced Safety Structural Performance Range (S-4) The Reduced Safety Structural Performance Range is defined as the continuous range of damage states between the Life Safety Structural Performance Level (S-3) and the Collapse Prevention Structural Performance Level (S-5).

C2.3.1.4 Reduced Safety Structural Performance Range (S-4) The Reduced Safety Structural Performance Range is a range encompassing any performance level between Life Safety and Collapse Prevention.

2.3.1.4.1 Limited Safety Structural Performance Level (S-4) Structural Performance Level S-4, Limited Safety, is defined as a postearthquake damage state between the Life Safety Structural Performance Level (S-3) and the Collapse Prevention Structural Performance Level (S-5). Acceptance criteria for evaluation or retrofit based on the Limited Safety Structural Performance Level shall be taken halfway between those for Life Safety Structural Performance Level (S-3) and the Collapse Prevention Structural Performance Level (S-5).

C2.3.1.4.1 Limited Safety Structural Performance Level (S-4) The Limited Safety Structural Performance Level is set forth as a midway point between Life Safety and Collapse Prevention. It is intended to provide a structure with a greater reliability of resisting collapse than a structure that only meets the Collapse Prevention Performance Level, but not to the full level of safety that the Life Safety Performance Level would imply.

2.3.1.5 Collapse Prevention Structural Performance Level (S-5) Structural Performance Level S-5, Collapse Prevention, is defined as the postearthquake damage state in which a structure has damaged components and continues to support gravity loads but retains no margin against collapse. A structure in compliance with the acceptance criteria specified in this standard for this Structural Performance Level is expected to achieve this state.

C2.3.1.5 Collapse Prevention Structural Performance Level (S-5) Structural Performance Level S-5, Collapse Prevention, means the postearthquake damage state in which the building is on the verge of partial or total collapse. Substantial damage to the structure has occurred, potentially including significant degradation in the stiffness and strength of the lateral-force-resisting system, large permanent lateral deformation of the structure, and—to a more limited extent—degradation in vertical-load-carrying capacity. However, all significant components of the gravity-load-resisting system must continue to carry their gravity loads. Significant risk of injury caused by falling hazards from structural debris might exist. The structure might not be technically practical to repair and is not safe for reoccupancy because aftershock activity could induce collapse.

2.3.1.6 Structural Performance Not Considered (S-6) Where an evaluation or retrofit does not address the structure, the Structural Performance Level shall be Structural Performance Not Considered (S-6).

C2.3.1.6 Structural Performance Not Considered (S-6) Some owners might desire to address certain nonstructural vulnerabilities in an evaluation or retrofit program—for example, bracing parapets or anchoring hazardous material storage containers—without addressing the performance of the structure itself. Such retrofit programs are sometimes attractive because they can permit a significant reduction in seismic risk at relatively low cost.

2.3.2 Nonstructural Performance Levels The target Nonstructural Performance Level for a building shall be selected from four discrete Nonstructural Performance Levels: Operational (N-A), Position Retention (N-B), Life Safety (N-C), and Not Considered (N-D). Design procedures and acceptance criteria corresponding to these Nonstructural Performance Levels shall be as specified in Chapter 13.

C2.3.2 Nonstructural Performance Levels Nonstructural Performance Levels other than Not Considered (N-D) are summarized in Tables C2-5, C2-6, and C2-7. Between the discrete Nonstructural Performance Levels, there are ranges of performance that can result from a partial set of nonstructural components meeting a discrete Performance Level and the remainder

Table C2-5. Nonstructural Performance Levels and Illustrative Damage—Architectural Components

Component Group	Nonstructural Performance Levels		
	Life Safety (N-C)	Position Retention (N-B)	Operational (N-A)
Cladding	Extensive distortion in connections and damage to cladding components, including loss of weather-tightness and security. Overhead panels do not fall.	Connections yield; minor cracks or bending in cladding. Limited loss of weather-tightness.	Connections yield; negligible damage to panels. No loss of function or weather-tightness.
Glazing	Extensively cracked glass with potential loss of weather-tightness and security. Overhead panes do not shatter or fall.	Some cracked panes; none broken. Limited loss of weather-tightness.	No cracked or broken panes.
Partitions (masonry and hollow clay tile)	Distributed damage; some severe cracking, crushing, and dislodging in some areas.	Minor cracking at openings. Minor crushing and cracking at corners. Some minor dislodging, but no wall failure.	Minor cracking at openings. Minor crushing and cracking at corners.
Partitions (plaster and gypsum)	Distributed damage; some severe cracking and racking in some areas.	Cracking at openings. Minor cracking and racking throughout.	Minor cracking.
Ceilings	Extensive damage. Plaster ceilings cracked and spalled but did not drop as a unit. Tiles in grid ceilings dislodged and falling; grids distorted and pulled apart. Potential impact on immediate egress. Potential damage to adjacent partitions and suspended equipment.	Limited damage. Plaster ceilings cracked and spalled but did not drop as a unit. Suspended ceiling grids largely undamaged, though individual tiles falling.	Generally negligible damage with no impact on reoccupancy or functionality.
Parapets and ornamentation	Extensive damage; some falling in unoccupied areas.	Minor damage.	Minor damage.
Canopies and marquees	Extensively damaged but elements have not fallen.	Some damage to the elements, but essentially in place.	Minor damage to the elements, but essentially in place.
Chimneys and stacks	Extensive damage. No collapse.	Minor cracking.	Negligible damage.
Stairs and fire escapes	Some racking and cracking of slabs. Usable.	Minor damage.	Negligible damage.
Doors	Distributed damage. Some racked and jammed doors.	Minor damage. Doors operable.	Some minor damage. Doors operable.

NOTES: This table describes damage patterns commonly associated with nonstructural components for Nonstructural Performance Levels. The damage states described in the table might occur in some elements at the Nonstructural Performance Level, but it is unlikely that all of the damage states described will occur in all components at that Nonstructural Performance Level. The descriptions of damage states do not replace or supplement the quantitative definitions of performance provided elsewhere in this standard and are not intended for use in postearthquake evaluation of damage or for judging the safety of, or required level of repair to, a structure after an earthquake. They are presented to assist engineers using this standard to understand the relative degrees of damage at each defined performance level.
Damage patterns in nonstructural elements depend on the modes of behavior of those elements. More complete descriptions of damage patterns and levels of damage associated with damage levels can be found in other documents, such as FEMA E-74 (2011).

of the nonstructural components meeting a lower Performance Level. The Not Considered (N-D) Performance Level is intended to denote the Performance Level for which nonstructural components have not been evaluated, installed, or retrofitted, with specific attention paid to seismic design, or a situation in which only selected components have been retrofit but not enough to fully conform to the Life Safety Nonstructural Performance Level. For some nonstructural components at the Not Considered Performance Level, the typical installation or attachment details for the nonstructural component might provide some nominal capacity to resist seismic forces, including resistance by the use of friction.

For simplicity and ease of use, this standard treats Nonstructural Performance Levels N-A through N-C as cumulative. That is, any provision required to achieve N-B performance is also required to achieve N-A performance, and any provision required to achieve N-C performance is also required for N-A or N-B performance. Although this is rational in most cases, there are cases in which a safety-related N-C provision might have little actual relevance to a cost- or downtime-based objective. For example, an unessential piece of overhead equipment or an unreinforced masonry partition might legitimately threaten safety during the shaking, but if the damage is easily contained and the component is easily removed, repaired, or replaced, the effect on functional recovery is likely to be small. Nevertheless, for purposes of creating a usable and enforceable standard, these cases are not formally recognized as exceptions. Negotiation of scope exceptions among stakeholders on a given project or mitigation program is outside the scope of this standard.

By necessity, this standard is generic with respect to building uses. Though certain Nonstructural Performance Levels might be more or less appropriate for certain large classes of buildings (for example, buildings assigned to different Risk Categories as defined by the applicable regulations, building code, policy standards, or ASCE 7), the standard does not distinguish between actual uses within a class. For example, a rational safety-based objective for an assisted living facility or daycare center might consider certain vulnerabilities that would be reasonably ignored in an office building. Similarly, a downtime-based objective for an apartment building might reasonably require less attention to certain items than a downtime-based objective for a restaurant or department store that provides a public accommodation or for a manufacturing facility sensitive to dust and debris. Customized scopes that borrow from the N-A, N-B, and N-C provisions thus make sense for special occupancies. Nevertheless, this standard provides only generic provisions expected to apply to most buildings similarly situated. Again, negotiation of scope excep-

Table C2-6. Nonstructural Performance Levels and Illustrative Damage—Mechanical, Electrical, and Plumbing Systems and Components

System or Component Group	Nonstructural Performance Levels		
	Life Safety (N-C)	Position Retention (N-B)	Operational (N-A)
Elevators	Elevators out of service; counterweights do not dislodge.	Elevators operable; can be started when power available.	Elevators operate.
HVAC equipment	Units shifted on supports, rupturing attached ducting, piping, and conduit, but did not fall. Units might not operate.	Units are secure and possibly operate if power and other required utilities are available.	Units are secure and operate if emergency power and other utilities provided.
Manufacturing equipment	Units slid and overturned; utilities disconnected. Heavy units require reconnection and realignment. Sensitive equipment might not be functional.	Units secure but potentially not operable.	Units secure and operable if power and utilities available.
Ducts	Ducts broke loose from equipment and louvers; some supports failed; some ducts fell.	Minor damage at joints but ducts remain serviceable.	Negligible damage.
Piping	Some lines rupturea. Some supports failing. Some piping falling.	Minor leaks develop at a few joints. Some supports damaged, but systems remain suspended.	Negligible damage.
Fire suppression piping	Some sprinkler heads damaged by swaying ceilings. Leaks develop at some couplings.	Minor leakage at a few heads or pipe joints. System remains operable.	Negligible damage.
Fire alarm systems	Ceiling-mounted sensors damaged. Might not function.	System is functional.	System is functional.
Emergency lighting	Some lights fall. Power might be available from emergency generator.	System is functional.	System is functional.
Electrical distribution equipment	Units shift on supports and might not operate. Generators provided for emergency power start; utility service lost.	Units are secure and generally operable. Emergency generators start but might not be adequate to service all power requirements.	Units are functional. Emergency power is provided, as needed.
Light fixtures	Many broken light fixtures. Falling hazards generally avoided in heavier fixtures.	Minor damage. Some pendant lights broken.	Negligible damage.
Plumbing	Some fixtures broken, lines broken; mains disrupted at source.	Fixtures and lines serviceable; however, utility service might not be available.	System is functional. On-site water supply provided, if required.

NOTES: This table describes damage patterns commonly associated with nonstructural components for Nonstructural Performance Levels. The damage states described in the table might occur in some elements at the Nonstructural Performance Level, but it is unlikely that all of the damage states described will occur in a component at that Nonstructural Performance Level. The descriptions of damage states do not replace or supplement the quantitative definitions of performance provided elsewhere in this standard and are not intended for use in postearthquake evaluation of damage or for judging the safety of, or required level of repair to, a structure after an earthquake. They are presented to assist engineers using this standard to understand the relative degrees of damage at each defined performance level.
Damage patterns in nonstructural elements depend on the modes of behavior of those elements. More complete descriptions of damage patterns and levels of damage associated with damage levels can be found in other documents, such as FEMA E-74 (2011).

Table C2-7. Nonstructural Performance Levels and Illustrative Damage—Contents

Contents	Nonstructural Performance Levels		
	Life Safety (N-C)	Position Retention (N-B)	Operational (N-A)
Computer systems	Units rolled and overturned, disconnecting cables. Raised-access floors collapse. Power not available.	Units secure and remain connected. Power might not be available to operate, and internal damage might occur.	Units undamaged and operable; power available.
Desktop equipment	Some equipment slid off desks.	Some equipment slid off desks.	Equipment secured to desks and operable.
File cabinets	Cabinets overturned and spilled contents.	Drawers slid open, but cabinets did not tip.	Drawers slid open, but cabinets did not tip.
Bookshelves	Shelves overturned and spilled contents.	Books slid on shelves and some toppled from shelves.	Books remained on shelves.
Hazardous materials	Minor damage; occasional materials spilled; gaseous materials contained.	Negligible damage; materials contained.	Negligible damage; materials contained.

NOTES: This table describes damage patterns commonly associated with nonstructural components for Nonstructural Performance Levels. The damage states described in the table might occur in some elements at the Nonstructural Performance Level, but it is unlikely that all of the damage states described will occur in a component at that Nonstructural Performance Level. The descriptions of damage states do not replace or supplement the quantitative definitions of performance provided elsewhere in this standard and are not intended for use in postearthquake evaluation of damage or for judging the safety of, or required level of repair to, a structure after an earthquake. They are presented to assist engineers using this standard to understand the relative degrees of damage at each defined performance level.
Damage patterns in nonstructural elements depend on the modes of behavior of those elements. More complete descriptions of damage patterns and levels of damage associated with damage levels can be found in other documents, such as FEMA E-74 (2011).

tions among stakeholders on a given project or mitigation program is outside the scope of this standard.

2.3.2.1 Operational Nonstructural Performance Level (N-A) Nonstructural Performance Level N-A, Operational, is the postearthquake damage state in which the nonstructural components are able to provide the functions they provided in the building before the earthquake. Nonstructural components in compliance with the acceptance criteria of this standard for Operational Nonstructural Performance (N-A) and the requirements of ASCE 7, Chapter 13, where $I_p = 1.5$ are expected to achieve this postearthquake state.

C2.3.2.1 Operational Nonstructural Performance Level (N-A) At this Performance Level, most nonstructural systems required for normal use of the building are functional, although minor cleanup and repair of some items might be required. Achieving the Operational Nonstructural Performance Level requires considerations of many elements beyond those that are normally within the sole province of the structural engineer's responsibilities. For N-A performance, in addition to ensuring that nonstructural components are properly mounted and braced within the structure, it is often necessary to provide emergency standby equipment to provide utility services from external sources that might be disrupted. It might also be necessary to perform qualification testing to ensure that all necessary equipment will function during or after strong shaking.

Specific design procedures and acceptance criteria for this Nonstructural Performance Level are included in this standard. One of the major requirements for Operational Nonstructural Performance is equipment certification for function following the design Seismic Hazard Level event. The following documents, though they do not comprise a complete set of references, might be useful for qualifying equipment for Operational Nonstructural Performance.

1. AC156. *Acceptance Criteria for Seismic Certification by Shake-Table Testing of Nonstructural Components* (ICC-ES, 2010).
2. DOE/EH-545. *Seismic Evaluation Procedure for Equipment in U.S. Department of Energy Facilities* (U.S. Department of Energy 1997).
3. IEEE 693. *IEEE Recommended Practice for Seismic Design of Substations* (IEEE 1997).
4. CERL Technical Report 97/58. *The CERL Equipment Fragility and Protection Procedure (CEFAPP): Experimental Definition of Equipment Vulnerability to Transient Support Motions* (Wilcoski et al. 1997).
5. ASCE 7-10. *Minimum Design Loads for Buildings and Other Structures* (ASCE 2010).

Requirements and criteria for seismic qualification testing are outside the scope of this standard. Nevertheless, where such testing is performed, the general philosophy of this standard suggests that the testing protocols and documentation should be independently peer-reviewed for adequacy by a qualified structural engineer. Design review procedures similar to those in Sections 14.2.7.1 and 14.3.7 might be appropriate.

The Operational Nonstructural Performance Level essentially mirrors the requirements of ASCE 7 nonstructural seismic provisions for cases where I_p is taken as 1.5. Chapter 13 of ASCE 7 and its associated commentary provide additional detail.

2.3.2.2 Position Retention Nonstructural Performance Level (N-B) Nonstructural Performance Level N-B, Position Retention, is the postearthquake damage state in which nonstructural components might be damaged to the extent that they cannot immediately function but are secured in place so that damage caused by falling, toppling, or breaking of utility connections is avoided. Building access and Life Safety systems, including doors, stairways, elevators, emergency lighting, fire alarms, and fire suppression systems, generally remain available and operable, provided that power and utility services are available. Nonstructural components in compliance with the acceptance criteria of this standard for Position Retention Nonstructural Performance (N-B) and the requirements of ASCE 7 Chapter 13 are expected to achieve this postearthquake state.

C2.3.2.2 Position Retention Nonstructural Performance Level (N-B) This level of performance is more restrictive than the Life Safety Level because it involves bracing and anchorage of certain components that, based on their past performance, are not expected to pose significant risks to Life Safety.

Presuming that the building is structurally safe, occupants of a building or space performing at the N-B level are able to occupy the building safely, though normal use might be impaired, some cleanup might be needed, and some inspection might be warranted. In general, building equipment is secured in place and might be able to function if necessary utility service is available. However, some components might experience misalignments or internal damage and be inoperable. Power, water, natural gas, communications lines, and other utilities required for normal building use might not be available. Cladding, glazing, ceilings, and partitions might be damaged but would not present safety hazards or unoccupiable conditions. The risk of life-threatening injury caused by nonstructural damage is very low.

The Position Retention Performance Level essentially mirrors the requirements of ASCE 7 nonstructural seismic provisions for cases where I_p is taken as 1.0. Chapter 13 of ASCE 7 and its associated commentary provide additional detail.

2.3.2.3 Life Safety Nonstructural Performance Level (N-C) Nonstructural Performance Level N-C, Life Safety, is the postearthquake damage state in which nonstructural components may be damaged, but the consequential damage does not pose a life-safety threat. Nonstructural components in compliance with the acceptance criteria of this standard for Life Safety Nonstructural Performance (N-C) and the requirements of ASCE 7, Chapter 13, are expected to achieve this postearthquake state.

C2.3.2.3 Life Safety Nonstructural Performance Level (N-C) In a building performing at the N-C level, nonstructural components might have sustained significant and costly damage, but they would not become dislodged and fall in a manner that could cause death or serious injury, either to occupants or to people in immediately adjacent areas. Egress routes within the building are not extensively blocked but might be impaired by lightweight structural, architectural, mechanical, or furnishings debris, but Life Safety systems (including fire suppression systems) and hazardous materials storage and distribution should be functional.

2.3.2.4 Nonstructural Performance Not Considered (N-D) Where an evaluation or retrofit does not address all nonstructural components to one of the levels in the previous sections, the Nonstructural Performance Level shall be Nonstructural Performance Not Considered (N-D).

C2.3.2.4 Nonstructural Performance Not Considered (N-D) In some cases, the decision to rehabilitate the structure might be made without addressing the vulnerabilities of nonstructural components. In practice, this decision is often made where

nonstructural mitigation would disrupt normal uses of the building. Because many more earthquake-related deaths result from structural collapse than from nonstructural hazards, mitigation programs focused on reducing casualties might reasonably require only structural evaluation and retrofit. Another possibility is to address structural issues and only those nonstructural hazards where very heavy elements can fall on occupants or hazards around the perimeter of the building. The crushing injuries caused by falling hazards have a higher likelihood of life loss than other types of earthquake-caused injuries. For example, parapet bracing ordinances were one of the first seismic building safety requirements because these nonstructural elements were observed to fail at earthquake ground motions much lower than those that damaged most buildings.

Mitigation of any select subset of high-hazard nonstructural elements, where the subset is less than the complete set required for Life Safety Nonstructural Performance (N-C), would fall under this performance level solely because all nonstructural life safety hazards would not have been addressed in a manner sufficient to qualify for Life Safety Nonstructural Performance (N-C).

2.3.3 Designation of Target Building Performance Levels A target Building Performance Level is designated alphanumerically with a numeral representing the Structural Performance Level and a letter representing the Nonstructural Performance Level, such as 1-B, 3-C, 5-E, or 6-C.

C2.3.3 Designation of Target Building Performance Levels Several common target Building Performance Levels described in this section are shown in Figure C2-1. Many combinations are possible because structural performance can be selected at any level in the two Structural Performance Ranges. Table C2-8 indicates some of the possible combinations of target Building Performance Levels and provides names for those most likely to be selected as the basis for design.

2.3.3.1 Operational Building Performance Level (1-A) To attain the Operational Building Performance Level (1-A), the structural components of the building shall meet the requirements of Section 2.3.1.1 for the Immediate Occupancy Structural Performance Level (S-1) and the nonstructural components shall meet the requirements of Section 2.3.2.1 for the Operational Nonstructural Performance Level (N-A).

C2.3.3.1 Operational Building Performance Level (1-A) Buildings meeting this target Building Performance Level are expected to sustain minimal or no damage to their structural and nonstructural components. The building is suitable for its normal occupancy and use, although possibly in a slightly impaired mode, with power, water, and other required utilities provided from emergency sources, and possibly with some nonessential systems not functioning. Buildings meeting this target Building Performance Level pose an extremely low Life Safety risk.

Under very low levels of earthquake ground motion, most buildings should be able to meet or exceed this target Building Performance Level. Typically, it is not economically practical to modify existing buildings to meet this target Building Performance Level for severe ground shaking, except for buildings that house essential services.

2.3.3.2 Immediate Occupancy Building Performance Level (1-B) To attain the Immediate Occupancy Building Performance

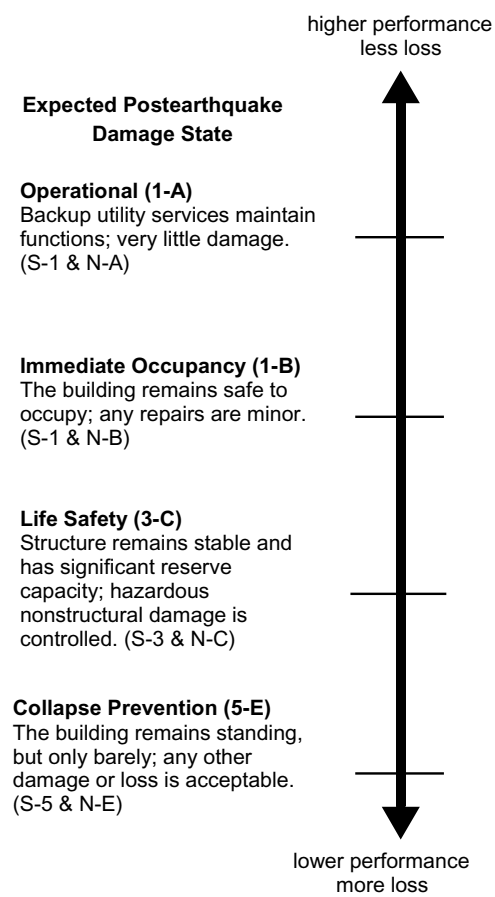

FIG. C2-1. Target Building Performance Levels and Ranges

Table C2-8. Target Building Performance Levels

Nonstructural Performance Levels	Structural Performance Levels					
	Immediate Occupancy (S-1)	Damage Control (S-2)	Life Safety (S-3)	Limited Safety (S-4)	Collapse Prevention (S-5)	Not Considered (S-6)
Operational (N-A)	Operational 1-A	2-A	NR[a]	NR[a]	NR[a]	NR[a]
Position Retention (N-B)	Immediate Occupancy 1-B	2-B	3-B	4-B	NR[a]	NR[a]
Life Safety (N-C)	1-C	2-C	Life Safety 3-C	4-C	5-C	6-C
Not Considered (N-D)	NR[a]	NR[a]	3-D	4-D	Collapse Prevention 5-D	No evaluation or retrofit

NOTE: NR = Not recommended.
[a]Combining low Structural Performance Level with high Nonstructural Performance Level, or the converse, is not recommended for several reasons. For example, having a low Structural Performance Level may lead to damage that prohibits actually achieving the desired Nonstructural Performance Level regardless of whether the nonstructural elements were retrofit to meet that Performance Level. Additionally, not addressing nonstructural hazards when a higher Structural Performance Level retrofit is undertaken may lead to an unbalanced design, where life safety hazards caused by nonstructural items are still present.

Level (1-B), the structural components of the building shall meet the requirements of Section 2.3.1.1 for the Immediate Occupancy Structural Performance Level (S-1) and the nonstructural components of the building shall meet the requirements of Section 2.3.2.2 for the Position Retention Nonstructural Performance Level (N-B).

C2.3.3.2 Immediate Occupancy Building Performance Level (1-B) Buildings meeting this target Building Performance Level are expected to sustain minimal or no damage to their structural elements and only minor damage to their nonstructural components. Although it would be safe to reoccupy a building meeting this target Building Performance Level immediately after a major earthquake, nonstructural systems might not function, either because of the lack of electrical power or internal damage to equipment. Therefore, although immediate reoccupancy of the building is possible, it might be necessary to perform some cleanup and repair and await the restoration of utility service before the building can function in a normal mode. The risk to Life Safety at this target Building Performance Level is very low.

Many building owners might wish to achieve this level of performance when the building is subjected to moderate earthquake ground motion. In addition, some owners might desire such performance for very important buildings under severe earthquake ground shaking. This level provides most of the protection obtained under the Operational Building Performance Level without the cost of providing standby utilities and performing rigorous seismic qualification of equipment performance.

2.3.3.3 Life Safety Building Performance Level (3-C) To attain the Life Safety Building Performance Level (3-C), the structural components of the building shall meet the requirements of Section 2.3.1.3 for the Life Safety Structural Performance Level (S-3) and the nonstructural components shall meet the requirements of Section 2.3.2.3 for the Life Safety Nonstructural Performance Level (N-C).

C2.3.3.3 Life Safety Building Performance Level (3-C) For purposes of this document, the term *Life Safety* as a seismic performance descriptor is used in a specific way. A building conforming to a Life Safety description does not mean that there will be no injuries to occupants or persons in the immediate vicinity of the building in an earthquake of the Seismic Hazard Level assessed, but few, if any, of the occupant injuries are expected to be serious enough to require skilled medical attention for the injured person to survive. An injury to a person that occurs because of the earthquake performance of a building evaluated as not *life safe* is one that requires skilled medical attention within 24 hours of the injury for the person to survive. It is recognized that many injuries, indeed most, that could occur to occupants of a building are not likely to be evaluated as posing a survival threat because the injury could be treated by first aid treatment. An injury might be evaluated as consistent with this Life Safety descriptor even though the person has been injured.

Buildings meeting this level may experience extensive damage to structural and nonstructural components. Repairs may be required before reoccupancy of the building occurs, and repair may be deemed economically impractical. The risk to Life Safety in buildings meeting this target Building Performance Level is low.

This target Building Performance Level may entail more damage than anticipated for new buildings that have been properly designed and constructed for seismic resistance when subjected to their design earthquakes. Building owners may desire to meet this target Building Performance Level for severe ground shaking.

2.3.3.4 Collapse Prevention Building Performance Level (5-D) To attain the Collapse Prevention Building Performance Level (5-D), the structural components of the building shall meet the requirements of Section 2.3.1.5 for the Collapse Prevention Structural Performance Level (S-5). Nonstructural components are Not Considered (N-D).

2.4 SEISMIC HAZARD

The seismic hazard caused by ground shaking shall be based on the location of the building with respect to causative faults, the regional and site-specific geologic and geotechnical characteristics, and the specified Seismic Hazard Levels. Assessment of the site-failure hazards caused by earthquake-induced geologic and geotechnical conditions shall be performed in accordance with Chapter 8. The site class shall be determined consistent with the requirements of Section 2.4.1.6.1.

Seismic hazard caused by ground shaking shall be defined as acceleration response spectra or ground motion acceleration histories determined on either a probabilistic or deterministic basis. Acceleration response spectra shall be developed in accordance with either the general procedure of Section 2.4.1 or the site-specific procedure of Section 2.4.2. Ground motion acceleration histories shall be developed in accordance with Section 2.4.2.2. The Level of Seismicity of the site of the building shall be determined as specified in Section 2.5.

The site-specific procedure shall be used where any of the following conditions apply:

1. The building is located on Site Class E soils (as defined in Section 2.4.1.6.1), and the mapped BSE-2N spectral response acceleration at short periods (S_{XS}) exceeds 2.0;
2. The building is located on Site Class F soils (as defined in Section 2.4.1.6.1).

EXCEPTION: Where S_S determined in accordance with Section 2.4.1.1 is less than 0.20 for buildings located on Site Class F soils, use of a Site Class E soil profile without a site-specific study is permitted.

2.4.1 General Procedure for Hazard Caused by Ground Shaking The seismic hazard caused by ground shaking is defined for any Seismic Hazard Level using approved 5%-damped response spectrum ordinates for short (0.2 s) and long (1 s) periods, in the direction of maximum horizontal response.

The design short-period spectral response acceleration parameter, S_{XS}, and the design long-period response acceleration parameter, S_{X1}, shall be determined as follows:

1. If the desired Seismic Hazard Level is BSE-2N, BSE-1N, BSE-2E, or BSE-1E, obtain the design spectral response acceleration parameters in accordance with Sections 2.4.1.1 through 2.4.1.4;
2. If the desired Seismic Hazard Level is one for which approved seismic hazard maps are available either in print or electronically, obtain spectral response acceleration parameters directly from them. Values between map contour lines shall be interpolated between contour lines on either side of the site, or by using the value shown on the map for the higher contour adjacent to the site;
3. If the desired Seismic Hazard Level is one for which approved probabilistic seismic hazard curves (but not

maps) are available, obtain spectral response acceleration parameters by direct logarithmic interpolation of the seismic hazard curves, in accordance with Section 2.4.1.5;

4. Obtain the design spectral response acceleration parameters by adjusting the mapped or interpolated spectral response acceleration parameters for site class effects, in accordance with Section 2.4.1.6;
5. Using the design spectral response acceleration parameters that have been adjusted for site class effects, develop the general response spectrum in accordance with Section 2.4.1.7.

C2.4.1 General Procedure for Hazard Caused by Ground Shaking Although the performance objective options featured in this standard allow consideration of any Seismic Hazard Level that might be of interest, there are four levels specified explicitly in the standard for use for specific Performance Objectives. This standard uses seismic hazard maps prepared by the U.S. Geologic Survey (USGS) National Seismic Hazard Mapping Project based on its 2008 update (Petersen et al. 2008), as well as the Risk-Targeted Maximum Considered Earthquake (MCE_R) ground motion maps in ASCE 7. Both suites of maps incorporate three of the Next Generation Attenuation Relationships (Power et al. 2008), among many other changes with respect to their previous editions. It is important to note that these maps also incorporate adjustments from "geomean" ground motions (the product of hazard assessment using modern ground motion attenuation functions) to "maximum-direction" ground motions, for reasons explained in the Part 1 commentary of FEMA P-750 (2009c). The adjustment to get "maximum direction values" from "geomean values" is a factor of 1.1 for the short-period parameters and 1.3 for the long-period parameters. Although the maps provide a ready source for this type of information, this standard may be used with approved seismic hazard data from any source, as long as it is expressed as 5%-damped response spectrum ordinates for short-period (0.2 s) and long-period (1 s) periods, in the maximum direction of horizontal response. In fact, site-specific procedures can be used where available seismic hazard maps do not adequately characterize the local hazard. Such conditions might exist at some locations near active seismic faults. Such site-specific hazard values can be determined either by a knowledgeable professional expert on such studies or from Web-based tools maintained by the U.S. Geological Survey or similar state or local agencies.

This standard requires that "maximum direction" values be used. However, at the discretion of the designer or regulator, the "geomean" values may be used for Reduced Performance Objective evaluations or retrofits by dividing the short-period parameter S_{XS} by 1.1 and the long-period parameter S_{X1} by 1.3. For periods between the short period, $T = 0.2$ s, and long period, $T = 1.0$ s, one can divide by a factor that is an interpolation between 1.1 for $T = 0.2$ s and 1.3 for $T = 1.0$ s and the period of the desired response spectrum parameter to obtain other geomean response spectrum parameters.

2.4.1.1 BSE-2N Spectral Response Acceleration Parameters The design short-period spectral response acceleration parameter, S_{XS}, and the design spectral response acceleration parameter at a 1-s period, S_{X1}, for the BSE-2N Seismic Hazard Level shall be determined using values of S_S and S_1 taken from the Risk-Targeted Maximum Considered Earthquake (MCE_R) spectral response acceleration contour maps in Chapter 22 of ASCE 7, modified for site class in accordance with Section 2.4.1.6. Values between contour lines shall be interpolated in accordance with the procedure given in Section 2.4.1.

C2.4.1.1 BSE-2N Spectral Response Acceleration Parameters The BSE-2N Seismic Hazard Level is consistent with the MCE_R ground motions in ASCE 7 and FEMA P-750 (2009c). In most areas of the United States, the BSE-2N Seismic Hazard Level can be thought of as the seismic hazard with a 2% probability of exceedance in 50 years (2%/50-year) multiplied by a risk coefficient. The resulting MCE_R ground motion, which can be larger or smaller than the 2%/50-year values, is such that new buildings designed by the IBC (ICC, 2012) for that ground motion have a 1% probability of collapse in 50 years (approximately). At sites close to known faults with significant slip rates and characteristic earthquakes with magnitudes in excess of about 6.0, the MCE_R ground motion is limited by a deterministic estimate of ground motion based on the 84th-percentile shaking likely to be experienced in such a characteristic event. Ground-shaking levels determined in this manner typically correspond to risks of collapse greater than 1% in 50 years. The design professional is referred to FEMA P-750 (2009c) and Luco et al. (2007) for further discussion of MCE_R ground motions and risk targeting, respectively.

The MCE_R ground motion was chosen for use with the new design code equivalent performance objectives so that consistent ground motion parameters are used between ASCE 7 and this standard.

2.4.1.2 BSE-1N Spectral Response Acceleration Parameters The design short-period spectral response acceleration parameter, S_{XS}, and the design spectral response acceleration parameter at a 1-s period, S_{X1}, for the BSE-1N Seismic Hazard Level shall be taken as two-thirds of the values of the parameters for the BSE-2N Seismic Hazard Level, determined in accordance with Section 2.4.1.1.

C2.4.1.2 BSE-1N Spectral Response Acceleration Parameters The BSE-1N parameters are intended to match the design earthquake ground motions in ASCE 7 for use in the BPON.

In building design provisions before the 1997 NEHRP (FEMA, 1997e and 1997f), the seismic hazard was generally based on an earthquake with a 10% probability of exceedance in 50 years. That hazard was retained in ASCE 41-06 as one of two options for the BSE-1, along with 2/3 of the MCE. Starting with the 1997 NEHRP provisions, and subsequently the 2000 IBC (ICC, 2000), the 10%/50-year Seismic Hazard Level is no longer explicitly referenced in new building design standards and is no longer explicitly referenced in this standard. This lack of inclusion in the standard's pre-defined Seismic Hazard Levels, however, does not prohibit the use of the 10%/50-year ground motion as the Seismic Hazard Level for any performance objective other than the explicitly defined BPOE or BPON Performance Objectives.

2.4.1.3 BSE-2E Spectral Response Acceleration Parameters The design short-period spectral response acceleration parameter, S_{XS}, and the design spectral response acceleration parameter at a 1-s period, S_{X1}, for the BSE-2E Seismic Hazard Level shall be taken as values from approved 5%/50-year maximum direction spectral response acceleration contour maps (denoted S_S and S_1 in this standard), modified for site class in accordance with Section 2.4.1.6. Values between contour lines shall be interpolated in accordance with the procedure in Section 2.4.1. Values for BSE-2E need not be greater than those for BSE-2N.

C2.4.1.3 BSE-2E Spectral Response Acceleration Parameters For the BSE-2E Seismic Hazard Level, the 5%/50-year probability of exceedance was chosen initially because it represented ground motions approximately 75% as large as those prescribed for new buildings in California, where the 75%

approach originated and has been most widely used (see Section C2.2.1). This definition has also been used in the California State Building Code for state buildings since the mid-1990s. Furthermore, when examining the anticipated risk of collapse using the same idealized fragility curves used in developing the Risk-Targeted Maximum Considered Earthquake (MCE_R) hazard parameters in ASCE 7, one finds that on average the risk of collapse for structures designed using the 5%/50-year hazard level is more uniform than would be achieved with a constant 75% demand adjustment factor. Values shall be those approved by the authority having jurisdiction.

Because of the deterministic caps placed on some of the probabilistic ground motions for new building designs, some of the 5%/50-year hazard parameters are greater than their MCE_R counterparts. Given that the philosophy is to provide for lesser design parameters than for new buildings (as discussed in Section C2.2.1), it is not consistent to have the BSE-2E ground motions be greater than the BSE-2N values, notwithstanding the different bases of analysis of the two standards. It is for this reason that the 5%/50-year hazard parameters are capped at the BSE-2N values. Furthermore, this limit means that in locations where the MCE_R demand is capped, the BSE-2E demand is the same as the BSE-2N demand (or more than 75% of it), eliminating some or all of the intended, traditional effect of the BPOE, as discussed in Section C2.2.1.

2.4.1.4 BSE-1E Spectral Response Acceleration Parameters The design short-period spectral response acceleration parameter, S_{XS}, and the design spectral response acceleration parameter at a 1-s period, S_{X1}, for the BSE-1E Seismic Hazard Level shall be taken as values from approved 20%/50-year maximum direction spectral response acceleration contour maps (denoted S_S and S_1 in this standard), and modified for site class in accordance with Section 2.4.1.6. Values between contour lines shall be interpolated in accordance with the procedure in Section 2.4.1. Values for BSE-1E need not be greater than those for BSE-1N.

C2.4.1.4 BSE-1E Spectral Response Acceleration Parameters The BSE-1E Seismic Hazard Level is the analogous reduction to BSE-1N as the BSE-2E is to the BSE-2N.

2.4.1.5 Response Acceleration Parameters for Other Probabilities of Exceedance Acceleration response spectra for Seismic Hazard Levels corresponding to probabilities of exceedance other than those listed in Sections 2.4.1.3 (for BSE-2E) and 2.4.1.4 (for BSE-1E) shall be obtained directly from approved seismic hazard curves or a site-specific seismic hazard evaluation.

C2.4.1.5 Response Acceleration Parameters for Other Probabilities of Exceedance Response acceleration parameters other than those specifically defined in this standard can be used for Limited (i.e., less than BPOE) or Enhanced (i.e., more than BPOE)Performance Objectives. Seismic hazard parameters are available from the USGS through their website: earthquake .usgs.gov.

2.4.1.6 Adjustment for Site Class The design short-period spectral response acceleration parameter, S_{XS}, and the design spectral response acceleration parameter at 1 s, S_{X1}, shall be obtained from Eqs. (2-1) and (2-2), respectively, as follows:

$$S_{XS} = F_a S_S \tag{2-1}$$

$$S_{X1} = F_v S_1 \tag{2-2}$$

where F_a and F_v are site coefficients determined respectively from Tables 2-3 and 2-4, based on the site class and the values of the response acceleration parameters S_S and S_1 for the selected return period.

Table 2-3. Values of F_a as a Function of Site Class and Mapped Short-Period Spectral Response Acceleration S_S

	Mapped Spectral Acceleration at Short-Period S_S[a]				
Site Class	$S_S \le 0.25$	$S_S = 0.50$	$S_S = 0.75$	$S_S = 1.00$	$S_S \ge 1.25$
A	0.8	0.8	0.8	0.8	0.8
B	1.0	1.0	1.0	1.0	1.0
C	1.2	1.2	1.1	1.0	1.0
D	1.6	1.4	1.2	1.1	1.0
E	2.5	1.7	1.2	0.9	0.9
F	[b]	[b]	[b]	[b]	[b]

[a]Straight-line interpolation shall be used for intermediate values of S_S.
[b]Site-specific geotechnical investigation and dynamic site response analyses shall be performed.

Table 2-4. Values of F_v as a Function of Site Class and Mapped Spectral Response Acceleration at 1-s Period S_1

	Mapped Spectral Acceleration at 1-s Period S_1[a]				
Site Class	$S_1 \le 0.1$	$S_1 = 0.2$	$S_1 = 0.3$	$S_1 = 0.4$	$S_1 \ge 0.50$
A	0.8	0.8	0.8	0.8	0.8
B	1.0	1.0	1.0	1.0	1.0
C	1.7	1.6	1.5	1.4	1.3
D	2.4	2.0	1.8	1.6	1.5
E	3.5	3.2	2.8	2.4	2.4
F	[b]	[b]	[b]	[b]	[b]

[a]Straight-line interpolation shall be used for intermediate values of S_1.
[b]Site-specific geotechnical investigation and dynamic site response analyses shall be performed.

2.4.1.6.1 Site Classes Site classes shall be defined as follows:

1. **Site Class A:** Hard rock with average shear wave velocity, $\overline{v_s} > 5{,}000$ ft/s;
2. **Site Class B:** Rock with $2{,}500 \text{ ft/s} < \overline{v_s} < 5{,}000$ ft/s;
3. **Site Class C:** Very dense soil and soft rock with $1{,}200 \text{ ft/s} < \overline{v_s} \le 2{,}500$ ft/s or with either standard blow count $\overline{N} > 50$ or undrained shear strength $\overline{s_u} > 2{,}000 \text{ lb/ft}^2$;
4. **Site Class D:** Stiff soil with $600 \text{ ft/s} < \overline{v_s} \le 1{,}200$ ft/s or with $15 < \overline{N} \le 50$ or $1{,}000 \text{ lb/ft}^2 \le \overline{s_u} < 2{,}000 \text{ lb/ft}^2$;
5. **Site Class E:** Any profile with more than 10 ft of soft clay defined as soil with plasticity index $PI > 20$, or water content $w > 40\%$, and $\overline{s_u} < 500 \text{ lb/ft}^2$ or a soil profile with $\overline{v_s} < 600$ ft/s; and
6. Site Class F: Soils requiring site-specific evaluations:
   A. Soils vulnerable to potential failure or collapse under seismic loading, such as liquefiable soils, quick and highly sensitive clays, or collapsible weakly cemented soils;
   B. Peats or highly organic clays ($H > 10$ ft of peat or highly organic clay, where H = thickness of soil);
   C. Very high plasticity clays ($H > 25$ ft with $PI > 75$); or
   D. Very thick soft or medium-stiff clays ($H > 120$ ft).

The parameters $\overline{v_s}$, $\overline{N}$, and $\overline{s_u}$ are, respectively, the average values of the shear wave velocity, standard penetration test (SPT) blow count, and undrained shear strength of the upper 100 ft of soils at the site. These values shall be calculated from Eq. (2-3):

$$\overline{v_s}, \overline{N}, \overline{s_u} = \frac{\sum_{i=1}^{n} d_i}{\sum_{i=1}^{n} \frac{d_i}{v_{si}}, \frac{d_i}{N_i}, \frac{d_i}{s_{ui}}} \tag{2-3}$$

where N_i = SPT blow count in soil layer i;
n = number of layers of similar soil materials for which data are available;
d_i = depth of layer i;
s_{ui} = undrained shear strength in layer i;
v_{si} = shear wave velocity of the soil in layer i; and

$$\sum_{i=1}^{n} d_i = 100\,ft \tag{2-4}$$

Where v_s data are available for the site, such data shall be used to classify the site. If such data are not available, N data shall be used for cohesionless soil sites (sands, gravels), and s_u data for cohesive soil sites (clays). For rock in profile classes B and C, classification shall be based either on measured or estimated values of v_s. Classification of a site as Class A rock shall be based on measurements of v_s either for material at the site itself or for rock having the same formation adjacent to the site; otherwise, Class B rock shall be assumed. Class A or B profiles shall not be assumed to be present if there is more than 10 ft of soil between the rock surface and the base of the building.

2.4.1.6.2 Default Site Class If there are insufficient data available to classify a soil profile as Class A, B, or C and there is no evidence of soft clay soils characteristic of Class E in the vicinity of the site, the default site class shall be taken as Class D. If there is evidence of Class E soils in the vicinity of the site and no other data supporting selection of Class A, B, C, or D, the default site class shall be taken as Class E.

C2.4.1.6.2 Default Site Class For most sites, the site coefficients for Site Class D provide a sufficiently conservative estimation of the effect of the site amplification on the mapped spectral response parameters. However, in some cases, where very soft soil is encountered, the approximations from assuming Site Class D may not sufficiently account for the site amplification of rock ground motions. In those cases, it is more appropriate to assume a Site Class E, which is why the standard requires the use of Site Class E if there is knowledge of the potential for the site to be classified as Site Class E. It should be noted that the site coefficients for Site Class E are smaller than those for Site Class D in the short period range. This difference is caused by the softer site not amplifying short-period shaking as much. Because of that, an assumption of Site Class E may be unconservative if the building is a short-period dominated building. In addition, the assumption of Site Class E as opposed to Site Class D, though providing a lower short-period response parameter, may cause the building to be classified in a higher level of seismicity. In those cases, the design professional and the authority having jurisdiction should exercise judgment about what site class is appropriate for consideration.

2.4.1.7 General Response Spectrum A general response spectrum shall be developed as specified in Sections 2.4.1.7.1 and 2.4.1.7.2.

2.4.1.7.1 General Horizontal Response Spectrum A general horizontal response spectrum, as shown in Fig. 2-1, shall be developed using Eqs. (2-5), (2-6), (2-7), and (2-8) for spectral response acceleration, S_a, versus structural period, T, in the horizontal direction.

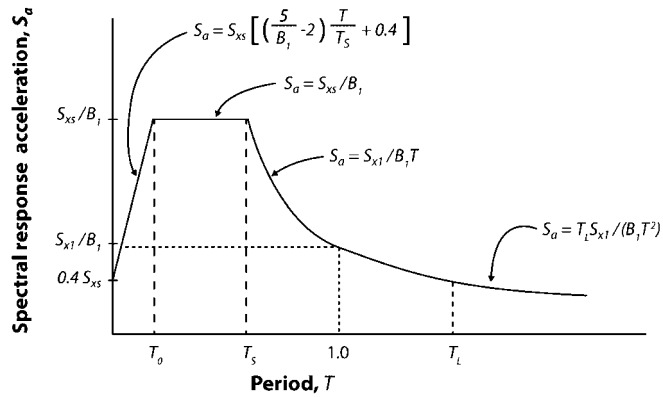

FIG. 2-1. General Horizontal Response Spectrum

$$S_a = \left[\left(\frac{5}{B_1} - 2\right)\frac{T}{T_S} + 0.4\right] \tag{2-5}$$

for $0 < T < T_0$, and

$$S_a = S_{XS}/B_1 \text{ for } T_0 < T < T_S, \text{ and} \tag{2-6}$$

$$S_a = S_{X1}/(B_1T), \text{ for } T_S < T < T_L \tag{2-7}$$

$$S_a = T_L S_{X1}/(B_1T^2), \text{ for } T > T_L \tag{2-8}$$

where T_S and T_0 are given by Eqs. (2-9) and (2-10):

$$T_S = S_{X1}/S_{XS} \tag{2-9}$$

$$T_0 = 0.2T_S \tag{2-10}$$

T_L = the long-period transition parameter, shall be obtained from published maps, site-specific response analysis, or any other method approved by the authority having jurisdiction.
and where

$$B_1 = 4/[5.6 - \ln(100\beta)] \tag{2-11}$$

and β is the effective viscous damping ratio.

Use of spectral response accelerations calculated using Eq. (2-5) in the extreme short-period range ($T < T_0$) shall only be permitted in dynamic analysis procedures and only for modes other than the fundamental mode.

2.4.1.7.2 General Vertical Response Spectrum Where a vertical response spectrum is required for analysis per Chapter 7, it shall be developed by taking two-thirds of the maximum horizontal spectral ordinate, at each period, obtained for the horizontal response spectrum or by alternative rational procedures. Alternatively, it shall be permitted to develop a site-specific vertical response spectrum in accordance with Section 2.4.2.

C2.4.1.7.2 General Vertical Response Spectrum Traditionally, the vertical response spectra are taken as two-thirds of the horizontal spectrum developed for the site. Although this method produces a reasonable approximation for most sites, vertical response spectra at sites located within a few kilometers of the zone of fault rupture can have stronger vertical response spectra than those determined by this approximation. Chapter 23 of FEMA P-750 (2009c) provides additional information on vertical ground motions, including procedures to construct a separate vertical earthquake response spectrum.

Development of site-specific response spectra for such near field sites is recommended where vertical response must be considered for buildings. Kehoe and Attalla (2000) present modeling considerations that should be accounted for where analyzing for vertical effects.

2.4.2 Site-Specific Procedure for Hazards Caused by Ground Shaking Where site-specific ground-shaking characterization is used as the basis of evaluation or retrofit design, the characterization shall be developed in accordance with this section.

2.4.2.1 Site-Specific Response Spectra Development of site-specific response spectra shall be based on the geologic, seismologic, and soil characteristics associated with the specific site and as specified in Sections 2.4.2.1.1 through 2.4.2.1.6.

For sites located within 3 mi (5 km) of an active fault that controls the hazard of the site-specific response spectra, the effect of fault-normal and fault-parallel motions shall be considered. In lieu of a more detailed assessment, the fault-parallel response spectrum can be taken as the maximum direction spectrum adjusted as follows:

- 1/1.1 (0.91) times the ordinates of the fault-normal response spectrum for periods less than or equal to 0.2 s;
- 1/1.3 (0.77) times the ordinates of the fault-normal response spectrum for periods equal to or greater than 1.0 s; and
- Interpolation can be used for periods between 0.2 s and 1.0 s.

C2.4.2.1 Site-Specific Response Spectra The code official should consider requiring an independent third-party review of the site-specific spectra by an individual with expertise in the evaluation of ground motion.

For cases within 3 mi (5 km) of active faults, generally termed near-field cases, there is a distinct difference in magnitude of the response spectrum from acceleration records oriented perpendicular to the fault, termed fault-normal, and those oriented parallel to the fault, termed fault-parallel. The fault-normal spectrum is larger than the fault-parallel spectrum. Because of this specific case, the fault-normal direction is the maximum direction. Therefore, the fault-parallel direction response spectrum does not need to have the maximum direction correction applied to it and can be represented by the geomean parameters.

2.4.2.1.1 Damping Ratios Response spectra shall be developed for an effective viscous damping ratio of 5% of critical damping, $\beta = 0.05$, and for other damping ratios appropriate to the indicated structural behavior, as defined in Section 7.2.3.6.

2.4.2.1.2 Minimum Spectral Amplitude The 5% damped site-specific spectral amplitudes in the period range of greatest significance to the structural response shall not be specified as less than 80% of the spectral amplitudes of the general response spectrum in Section 2.4.1.7.

For sites located within 3 mi (5 km) of an active fault, and when separate fault-normal and fault-parallel spectra are developed, the fault-parallel spectrum shall not be less than the following:

- 1/1.1 (0.91) times the ordinates of 80% of the general response spectrum in Section 2.4.1.7 for periods less than or equal to 0.2 s;
- 1/1.3 (0.77) times the ordinates of 80% of the general response spectrum in Section 2.4.1.7 for periods equal to or greater than 1.0 s; and
- Interpolation might be used for periods between 0.2 s and 1.0 s.

The minimum requirements above apply to free-field response spectra. Soil foundation structure interaction reductions, such as those permitted by Section 8.5.1, are to be taken after these minimum requirements are checked.

2.4.2.1.3 Basis of the Response Spectra Probabilistic site-specific spectra shall be mean spectra with the maximum direction adjustment at the probability of exceedance for the specific Seismic Hazard Level in Section 2.4.1.

2.4.2.1.4 Site-Specific BSE-2N and BSE-1N Spectral Response Acceleration Parameters The site-specific response acceleration parameters for the BSE-2N Seismic Hazard Level shall be determined based on the provisions in Chapter 21 of ASCE 7. The site-specific response acceleration parameters for the BSE-1N Seismic Hazard Level shall be two-thirds (2/3) of the BSE-2N response acceleration parameters.

2.4.2.1.5 Site-Specific BSE-2E and BSE-1E Spectral Response Acceleration Parameters The site-specific response acceleration parameters for the BSE-2E Seismic Hazard Level shall be taken as the smaller of the following:

1. The values of the parameters from mean probabilistic site-specific spectra at the 5%/50-year probability of exceedance adjusted for maximum direction; or
2. The values of the parameters determined for the BSE-2N Seismic Hazard Level.

The site-specific response acceleration parameters for the BSE-1E Seismic Hazard Level shall be taken as the values of the parameters from mean probabilistic site-specific spectra at the 20%/50-year probability of exceedance adjusted for maximum direction.

2.4.2.1.6 Site-Specific Response Acceleration Parameters Where a site-specific response spectrum has been developed and other sections of this standard require the design response acceleration parameters, S_{XS}, S_{X1}, and T_S, they shall be obtained using the site-specific response spectrum in accordance with this section.

Values of the design response acceleration parameter at short periods, S_{XS}, shall be taken as the response acceleration obtained from the site-specific spectrum at a period of 0.2 s, except that it shall not be taken as less than 90% of the peak response acceleration at any period larger than 0.2 s.

Values of the design response acceleration parameter at long periods, S_{X1}, shall be taken as the greater of the spectral acceleration, S_a, at a period of 1 s or two times the spectral acceleration, S_a, at a period of 2 s.

The values of the design parameters S_{XS} and S_{X1} shall not be less than 80% of the values determined in accordance with Section 2.4.1.7.

The value of T_S shall be determined in accordance with Eq. (2-9) using the values of S_{XS} and S_{X1} determined in this section.

2.4.2.2 Ground Motion Acceleration Histories Response history analysis shall be performed with no fewer than three data sets, each containing two horizontal components or, if vertical motion is to be considered, two horizontal components and one vertical component of ground motion acceleration histories that shall be selected and scaled from no fewer than three recorded events. Ground motion acceleration histories shall have magnitude, fault distances, and source mechanisms that are consistent with those that control the BSE-2N ground motion, or separate suites can be selected for the BSE-1N, BSE-2N, BSE-1E, or BSE-2E Seismic Hazard Levels.

Where three recorded ground motion acceleration history data sets that have these characteristics are not available or are evaluated as inappropriate for the site location and conditions, simulated ground motion acceleration history data sets that have equivalent duration and spectral content on average shall be used to make up the total number required.

Where three-dimensional analyses are performed, ground motion acceleration histories shall consist of pairs of appropriate horizontal ground motion acceleration components that shall be selected and scaled from individual recorded events, or they shall be determined in consistent manners.

For each pair of horizontal ground motion acceleration histories, a square root of the sum of the squares (SRSS) spectrum shall be constructed by taking the SRSS of the 5% damped response spectra for the scaled components with an identical scale factor applied to both components of a pair. Each pair of motions shall be scaled such that in the period range from $0.2T$ to $1.5T$, the average of the SRSS spectra from all horizontal acceleration history pairs does not fall below the corresponding ordinate of the target response spectrum.

At sites within 3 mi (5 km) of an active fault that controls the hazard, each pair of horizontal ground motion acceleration histories shall be rotated to the fault-normal and fault-parallel directions of the causative fault and shall be scaled so that the average of the fault-normal components is not less than the target response spectrum for the period range from $0.2T$ to $1.5T$.

Where spectral matching techniques are used, it shall be permitted to modify the components such that the average of the spectra from all ground motion acceleration histories in each direction does not fall below 71% of the target spectrum in the period range from $0.2T$ to $1.5T$ for sites located more than 3 mi (5 km) of the active fault that controls the hazard. At sites located within 3 mi (5 km), the records shall be modified such that the average of the ground motion acceleration histories in each direction are matched to separate target fault-normal and fault-parallel spectra determined in accordance with Section 2.4.2, in the period range from $0.2T$ to $1.5T$.

For seismically isolated systems, T shall be taken as the effective period of the isolation system at the BSE-2N hazard level using lower bound isolator properties.

Use of alternate ground motion selection and scaling methods not specifically covered shall be permitted subject to satisfaction of independent peer review.

C2.4.2.2 Ground Motion Acceleration Histories The linear and nonlinear response history analyses require ground motion acceleration histories that are representative of the seismic hazard at the site. There is considerable variability in the manner in which the ground shaking occurs at a site because of the earthquake occurring on different faults near the site or by earthquakes of different magnitudes. Because of that variability, several different ground motion acceleration histories should be used when performing response history analysis. Also, because each specific ground motion acceleration history causes the structure to respond differently, there is dispersion in the response parameters. Three records is the minimum number of ground motion acceleration histories that should be used.

Recognizing that real earthquakes do not affect the structure in one direction only, pairs of horizontal records are required to be used when performing a three-dimensional analysis. Vertical records should be included when the provisions require the consideration of vertical seismic effects, per Section 7.2.5.2.

The general response spectra in Section 2.4.1 are uniform hazard response spectra, meaning that they aggregate all possible earthquake scenarios for the given return period. Therefore, the individual ground motion acceleration histories may only match the uniform hazard spectrum over a certain period range. To address this difference, spectra from each pair are combined using the SRSS method at each point on the spectrum. After that, the spectra from the SRSS from each pair are then averaged together. That average spectrum is then compared with the design response spectrum, and the records are scaled if that spectrum does not exceed the general response spectrum.

Table 2-5. Level of Seismicity Definitions

Level of Seismicity[a]	S_{DS}	S_{D1}
Very low	<0.167 g	<0.067 g
Low	≥0.167 g <0.33 g	≥0.067 g <0.133 g
Moderate	≥0.33 g <0.50 g	≥0.133 g <0.20 g
High	≥ 0.50 g	≥0.20 g

[a]The higher level of seismicity defined by S_{DS} or S_{D1} shall govern.

2.5 LEVEL OF SEISMICITY

The Level of Seismicity shall be defined as High, Moderate, Low, or Very Low as defined in Table 2-5, where S_{DS} and S_{D1} are defined as follows:

$$S_{DS} = \frac{2}{3} F_a S_S \tag{2-12}$$

$$S_{D1} = \frac{2}{3} F_v S_1 \tag{2-13}$$

where F_a and F_v are site coefficients determined in accordance with Section 2.4.1.6 and the values of the response acceleration parameters S_S and S_1 are those associated with the BSE-2N in accordance with Section 2.4.1.1.

C2.5 LEVEL OF SEISMICITY

The Levels of Seismicity in this standard have been adjusted to match the Seismic Design Categories in ASCE 7 as follows:

SDC A: Very Low
SDC B: Low
SDC C: Moderate
SDC D–F: High

Therefore, the parameters S_{DS} and S_{D1} correspond to the parameters at the BSE-1N level.

This page intentionally left blank

CHAPTER 3
EVALUATION AND RETROFIT REQUIREMENTS

3.1 SCOPE

This chapter contains general requirements for seismic evaluation and retrofit, including data collection, the evaluation and retrofit procedures, and limitations on their use in demonstrating or achieving compliance with the Performance Objectives specified in this standard.

Section 3.2 specifies the data collection procedures for obtaining required as-built information on buildings. Section 3.3 outlines the evaluation and retrofit procedures contained in this standard: Tier 1 Screening, Tier 2 Deficiency-Based Evaluation and Retrofit, and Tier 3 Systematic Evaluation and Retrofit.

3.2 AS-BUILT INFORMATION

Before beginning an evaluation or retrofit in accordance with this standard, sufficient general information about the building shall be obtained to determine the permitted evaluation or retrofit procedures, in accordance with Section 3.3. This step includes determining the building type classification, in accordance with Section 3.2.1.

Once a procedure has been selected, the required building data to be collected shall be in accordance with the requirements of this section, in addition to any data required for the specific procedures as identified in Chapters 4, 5, and 6.

The as-built information on building configuration, building components, site and foundation, and adjacent structures shall be obtained in accordance with Sections 3.2.2, 3.2.3, 3.2.4, and 3.2.5, respectively. This data shall be obtained from available drawings, specifications, and other documents for the existing construction. Data collected from available documents shall be supplemented and verified by on-site investigations, including nondestructive examination and testing of building materials and components as required for the procedures in Chapters 4, 5, or 6.

At least one site visit shall be made to observe exposed conditions of building configuration, building components, site and foundation, and adjacent structures, made accessible by the owner, to verify that as-built information obtained from other sources is representative of the existing conditions.

C3.2 AS-BUILT INFORMATION

Existing building characteristics pertinent to seismic performance should be obtained from the following sources, as appropriate:

1. field observation of exposed conditions and configuration made accessible by the owner;
2. construction documents, engineering analyses, reports, soil borings and test logs, maintenance histories, and manufacturers' literature and test data, which may be available from the owner or the code official;
3. reference standards and codes from the period of construction, as cited in Chapters 9 through 12;
4. destructive and nondestructive examination and testing of selected building materials and components as specified in Section 6.2; and
5. interviews with building owners, tenants, managers, the original architect and engineer, contractor(s), and the local building official.

The information required for an existing building may also be available from a previously conducted seismic evaluation of the building. Where seismic retrofit has been mandated according to building construction classification, familiarity with the building type and typical seismic deficiencies is recommended. Such information is available from several sources, including Chapters 4 and 5 of this standard. Such information may be sufficient for the Tier 1 screening and Tier 2 deficiency-based procedures, but additional as-built information may be needed for the Tier 3 systematic procedures.

Where a destructive and nondestructive testing program is necessary to obtain as-built information, it is prudent to perform preliminary calculations on select key locations or parameters before establishing a detailed testing program. These calculations are meant to provide knowledge at a reasonable cost and with as little disruption as possible of construction features and material properties at concealed locations.

If the building is a historic structure, it is also important to identify the locations of historically significant features and fabric, which should be thoroughly investigated. Care should be taken in the design and investigation process to minimize the effect of work on these features. Refer to the *Standards for the Treatment of Historic Properties with Guidelines for Preserving, Rehabilitating, Restoring, and Reconstructing Historic Buildings* (Secretary of the Interior 1995). The services of a historic preservation expert may be necessary.

3.2.1 Building Type Where required by this standard, the building shall be classified as one or more of the Common Building Types listed in Table 3-1 based on the seismic-force-resisting system and the diaphragm type. Separate building types shall be used for buildings with different seismic-force-resisting systems in different directions.

C3.2.1 Building Type Fundamental to the Tier 1 and Tier 2 procedures is the grouping of buildings into sets that have similar behavioral characteristics. The classification of building type is required to determine whether the Tier 1 or Tier 2 procedures are permitted for evaluation or retrofit, as indicated in Section 3.3.

Table 3-1. Common Building Types

Wood Light Frames	
W1	These buildings are single- or multiple-family dwellings one or more stories high. Building loads are light, and the framing spans are short. Floor and roof framing consists of wood joists or rafters on wood studs spaced no more than 24 in. apart. The first-floor framing is supported directly on the foundation system or is raised up on cripple studs and post-and-beam supports. The foundation may consist of a variety of elements. Chimneys, where present, consist of solid brick masonry, masonry veneer, or wood frame with internal metal flues. Seismic forces are resisted by wood frame diaphragms and shear walls. Floor and roof diaphragms consist of straight or diagonal lumber sheathing, tongue-and-groove planks, oriented strand board, or plywood. Shear walls consist of straight or lumber sheathing, plank siding, oriented strand board, plywood, stucco, gypsum board, particle board, or fiberboard. Interior partitions are sheathed with plaster or gypsum board.
W1a (Multi-Story, Multi-Unit, Residential)	These buildings are multi-story, similar in construction to W1 buildings, but have plan areas on each floor of more than 3,000 ft^2. Older construction often has open-front garages at the lowest story.
Wood Frames, Commercial and Industrial	
W2	These buildings are commercial or industrial buildings with a floor area of 5,000 ft^2 or more. There are few, if any, interior walls. The floor and roof framing consists of wood or steel trusses, glulam or steel beams, and wood posts or steel columns. The foundation system may consist of a variety of elements. Seismic forces are resisted by wood diaphragms and exterior stud walls sheathed with plywood, oriented strand board, stucco, plaster, or straight or diagonal wood sheathing, or they may be braced with rod bracing. Wall openings for storefronts and garages, where present, are framed by post-and-beam framing.
Steel Moment Frames	
S1 (with Stiff Diaphragms)	These buildings consist of a frame assembly of steel beams and steel columns. Floor and roof framing consists of cast-in-place concrete slabs or metal deck with concrete fill supported on steel beams, open web joists, or steel trusses. Seismic forces are resisted by steel moment frames that develop their stiffness through rigid or semi-rigid beam–column connections. Where all connections are moment-resisting connections, the entire frame participates in seismic force resistance. Where only selected connections are moment-resisting connections, resistance is provided along discrete frame lines. Columns are oriented so that each principal direction of the building has columns resisting forces in strong axis bending. Diaphragms consist of concrete or metal deck with concrete fill and are stiff relative to the frames. Where the exterior of the structure is concealed, walls consist of metal panel curtain walls, glazing, brick masonry, or precast concrete panels. Where the interior of the structure is finished, frames are concealed by ceilings, partition walls, and architectural column furring. The foundation system may consist of a variety of elements.
S1a (with Flexible Diaphragms)	These buildings are similar to S1 buildings, except that diaphragms consist of wood framing; untopped metal deck; or metal deck with lightweight insulating concrete, poured gypsum, or similar nonstructural topping, and are flexible relative to the frames.
Steel Braced Frames	
S2 (with Stiff Diaphragms)	These buildings have a frame of steel columns, beams, and braces. Braced frames develop resistance to seismic forces by the bracing action of the diagonal members. The braces induce forces in the associated beams and columns such that all elements work together in a manner similar to a truss; all element stresses are primarily axial. Diaphragms transfer seismic loads to braced frames. The diaphragms consist of concrete or metal deck with concrete fill and are stiff relative to the frames. The foundation system may consist of a variety of elements. Three variations in the configuration and design of braced frames exist. These variations are • Concentrically braced frames: Component work lines intersect at a single point or at multiple points such that the distance between intersecting work lines (or eccentricity) is less than or equal to the width of the smallest component connected at the joint. • Eccentrically braced frames: Component work lines do not intersect at a single point, and the distance between the intersecting work lines (or eccentricity) exceeds the width of the smallest component connecting at the joint. Some of the members are subjected to shear and flexural stresses because of that eccentricity (see Section A.3.3.3). • Buckling restrained braced frames: Special types of concentrically braced frames where the steel bracing members are encased within a rigid casing that is intended to prevent buckling of the steel brace.
S2a (with Flexible Diaphragms)	These buildings are similar to S2 buildings, except that diaphragms consist of wood framing; untopped metal deck; or metal deck with lightweight insulating concrete, poured gypsum, or similar nonstructural topping, and are flexible relative to the frames.
Steel Light Frames	
S3	These buildings are pre-engineered and prefabricated with transverse rigid steel frames. They are one-story high. The roof and walls consist of lightweight metal, fiberglass, or cementitious panels. The frames are designed for maximum efficiency, and the beams and columns consist of tapered, built-up sections with thin plates. The frames are built-in segments assembled in the field with bolted or welded joints. Seismic forces in the transverse direction are resisted by the rigid frames. Seismic forces in the longitudinal direction are resisted by wall panel shear elements or rod bracing. Diaphragm forces are resisted by untopped metal deck, roof panel shear elements, or a system of tension-only rod bracing. The foundation system may consist of a variety of elements.
Dual Frame Systems with Backup Steel Moment Frames and Stiff Diaphragms	
S4	These buildings consist of a frame assembly of steel beams and steel columns. The floor and roof diaphragms consist of cast-in-place concrete slabs or metal deck with or without concrete fill. Framing consists of steel beams, open web joists, or steel trusses. Seismic forces are resisted primarily by either steel braced frames or cast-in-place concrete shear walls in combination with backup steel moment frames. These walls are bearing walls where the steel frame does not provide a complete vertical support system. The steel moment frames are designed to work together with the steel braced frames or concrete shear walls in proportion to their relative rigidity. The steel moment frames provide a secondary seismic-force-resisting system based on the stiffness of the frame and the moment capacity of the beam–column connections. The moment frames are typically capable of resisting 25% of the building's seismic forces. The foundation system may consist of a variety of elements.

Table 3-1. *(Continued)*

Steel Frames with Infill Masonry Shear Walls	
S5 (with Stiff Diaphragms)	This is an older type of building construction that consists of a frame assembly of steel beams and steel columns. The floor and roof diaphragms consist of cast-in-place concrete slabs or metal deck with concrete fill and are stiff relative to the walls. Framing consists of steel beams, open web joists, or steel trusses. Walls consist of infill panels constructed of solid clay brick, concrete block, or hollow clay tile masonry. Infill walls may completely encase the frame members and present a smooth masonry exterior with no indication of the frame. The seismic performance of this type of construction depends on the interaction between the frame and infill panels. The combined behavior is more like a shear wall structure than a frame structure. Solidly infilled masonry panels form diagonal compression struts between the intersections of the frame members. If the walls are offset from the frame and do not fully engage the frame members, diagonal compression struts do not develop. The strength of the infill panel is limited by the shear capacity of the masonry bed joint or the compression capacity of the strut. The post-cracking strength is determined by an analysis of a moment frame that is partially restrained by the cracked infill. The foundation system may consist of a variety of elements.
S5a (with Flexible Diaphragms)	These buildings are similar to S5 buildings, except that diaphragms consist of wood sheathing or untopped metal deck, or have large aspect ratios and are flexible relative to the walls.
Concrete Moment Frames	
C1	These buildings consist of a frame assembly of cast-in-place concrete beams and columns. Floor and roof framing consists of cast-in-place concrete slabs, concrete beams, one-way joists, two-way waffle joists, or flat slabs. Seismic forces are resisted by concrete moment frames that develop their stiffness through monolithic beam–column connections. In older construction, or in levels of low seismicity, the moment frames may consist of the column strips of two-way flat slab systems. Modern frames in levels of high seismicity have joint reinforcing, closely spaced ties, and special detailing to provide ductile performance. This detailing is not present in older construction. The foundation system may consist of a variety of elements.
Concrete Shear Walls	
C2 (with Stiff Diaphragms)	These buildings have floor and roof framing that consists of cast-in-place concrete slabs, concrete beams, one-way joists, two-way waffle joists, or flat slabs. Buildings may also have steel beams, columns, and concrete slabs for the gravity framing. Floors are supported on concrete columns or bearing walls. Seismic forces are resisted by cast-in-place concrete shear walls. In older construction, shear walls are lightly reinforced but often extend throughout the building. In more recent construction, shear walls occur in isolated locations, are more heavily reinforced, and have concrete slabs that are stiff relative to the walls. The foundation system may consist of a variety of elements.
C2a (with Flexible Diaphragms)	These buildings are similar to C2 buildings, except that diaphragms consist of wood sheathing, or have large aspect ratios, and are flexible relative to the walls.
Concrete Frames with Infill Masonry Shear Walls	
C3 (with Stiff Diaphragms)	This is an older type of building construction that consists of a frame assembly of cast-in-place concrete beams and columns. The floor and roof diaphragms consist of cast-in-place concrete slabs and are stiff relative to the walls. Walls consist of infill panels constructed of solid clay brick, concrete block, or hollow clay tile masonry. The seismic performance of this type of construction depends on the interaction between the frame and the infill panels. The combined behavior is more like a shear wall structure than a frame structure. Solidly infilled masonry panels form diagonal compression struts between the intersections of the frame members. If the walls are offset from the frame and do not fully engage the frame members, the diagonal compression struts do not develop. The strength of the infill panel is limited by the shear capacity of the masonry bed joint or the compression capacity of the strut. The postcracking strength is determined by an analysis of a moment frame that is partially restrained by the cracked infill. The shear strength of the concrete columns, after racking of the infill, may limit the semiductile behavior of the system. The foundation system may consist of a variety of elements.
C3a (with Flexible Diaphragms)	These buildings are similar to C3 buildings, except that diaphragms consist of wood sheathing or untopped metal deck or have large aspect ratios and are flexible relative to the walls.
Precast or Tilt-Up Concrete Shear Walls	
PC1 (with Flexible Diaphragms)	These buildings have precast concrete perimeter wall panels that are typically cast on-site and tilted into place. Floor and roof framing consists of wood joists, glulam beams, steel beams, or open web joists. Framing is supported on interior steel or wood columns and perimeter concrete bearing walls. The floors and roof consist of wood sheathing or untopped metal deck. Seismic forces are resisted by the precast concrete perimeter wall panels. Wall panels may be solid or have large window and door openings that cause the panels to behave more as frames than as shear walls. In older construction, wood framing is attached to the walls with wood ledgers. The foundation system may consist of a variety of elements.
PC1a (with Stiff Diaphragms)	These buildings are similar to PC1 buildings, except that diaphragms consist of precast elements, cast-in-place concrete, or metal deck with concrete fill and are stiff relative to the walls.
Precast Concrete Frames	
PC2 (with Shear Walls)	These buildings consist of a frame assembly of precast concrete girders and columns with the presence of shear walls. Floor and roof framing consists of precast concrete planks, tees, or double-tees supported on precast concrete girders and columns. Seismic forces are resisted by precast or cast-in-place concrete shear walls. Diaphragms consist of precast elements interconnected with welded inserts, cast-in-place closure strips, or reinforced concrete topping slabs. The foundation system may consist of a variety of elements.
PC2a (without Shear Walls)	These buildings are similar to PC2 buildings, except that concrete shear walls are not present. Seismic forces are resisted by precast concrete moment frames that develop their stiffness through beam–column joints rigidly connected by welded inserts or cast-in-place concrete closures. Diaphragms consist of precast elements interconnected with welded inserts, cast-in-place closure strips, or reinforced concrete topping slabs. The foundation system may consist of a variety of elements.

Continued

Table 3-1. *(Continued)*

Reinforced Masonry Bearing Walls with Flexible Diaphragms	
RM1	These buildings have bearing walls that consist of reinforced brick or concrete block masonry. The floor and roof framing consists of steel or wood beams and girders or open web joists and are supported by steel, wood, or masonry columns. Seismic forces are resisted by the reinforced brick or concrete block masonry shear walls. Diaphragms consist of straight or diagonal wood sheathing, plywood, or untopped metal deck and are flexible relative to the walls. The foundation system may consist of a variety of elements.
Reinforced Masonry Bearing Walls with Stiff Diaphragms	
RM2	These building are similar to RM1 buildings, except that the diaphragms consist of metal deck with concrete fill, precast concrete planks, tees, or double-tees, with or without a cast-in-place concrete topping slab and are stiff relative to the walls. The floor and roof framing is supported on interior steel or concrete frames or interior reinforced masonry walls. The foundation system may consist of a variety of elements.
Unreinforced Masonry Bearing Walls	
URM (with Flexible Diaphragms)	These buildings have perimeter bearing walls that consist of unreinforced clay brick, stone, or concrete masonry. Interior bearing walls, where present, also consist of unreinforced clay brick, stone, or concrete masonry. In older construction, floor and roof framing consists of straight or diagonal lumber sheathing supported by wood joists, which, in turn, are supported on posts and timbers. In more recent construction, floors consist of structural panel or plywood sheathing rather than lumber sheathing. The diaphragms are flexible relative to the walls. Where they exist, ties between the walls and diaphragms consist of anchors or bent steel plates embedded in the mortar joints and attached to framing. The foundation system may consist of a variety of elements.
URMa (with Stiff Diaphragms)	These buildings are similar to URM buildings, except that the diaphragms are stiff relative to the unreinforced masonry walls and interior framing. In older construction or large, multi-story buildings, diaphragms consist of cast-in-place concrete. In levels of low seismicity, more recent construction consists of metal deck and concrete fill supported on steel framing. The foundation system may consist of a variety of elements.
Steel Plate Shear Walls	
S6	These buildings have a frame of steel columns, beams, and shear walls. Shear walls are constructed with steel plates with horizontal and vertical boundary elements adjacent to the webs The boundary elements are designed to remain essentially elastic under maximum forces that can be generated by the fully yielded webs. Diaphragms transfer seismic forces to braced frames. The diaphragms consist of concrete or metal deck with concrete fill and are stiff relative to the shear walls. The foundation system may consist of a variety of elements.

These groups of building types were first defined in ATC-14 (1987) and have since been used in the FEMA guideline documents and previous editions of ASCE 31 and 41.

The Common Building Types are defined in Table 3-1. Because most structures are unique in some fashion, judgment should be used where selecting the building type, with the focus on the seismic-force-resisting system and elements.

In the specific case of building type S4: Dual Frame System with Backup Steel Moment Frames and Stiff Diaphragms, the building may be reclassified as S2: Steel Braced Frames with Stiff Diaphragms or C2: Concrete Shear Walls with Stiff Diaphragms if the secondary moment frame is not strong enough or stiff enough to behave as a true dual system.

Tier 3 procedures are required for building types not listed.

3.2.2 Building Configuration The as-built building configuration information shall include data on the type and arrangement of existing structural components of the vertical- and seismic-force-resisting systems, and the nonstructural components of the building that either affect the stiffness or strength of the structural components or affect the continuity of the structural load path. The as-built building configuration shall be examined to identify the vertical and seismic load paths.

C3.2.2 Building Configuration The as-built information on building configuration should identify the load-resisting components. Load-resisting components may include structural and nonstructural components that participate in resisting seismic loads, whether or not they were intended to do so by the original designers. This information should identify potential seismic deficiencies in load-resisting components, which may include discontinuities in the load path, weak links, irregularities, and inadequate strength and deformation capacities.

3.2.3 Component Properties Sufficient as-built information shall be collected on components of the building, including their geometric and material properties and their interconnection with other components, to permit computation of their strengths and deformation capacities based on the requirements of the selected procedure.

C3.2.3 Component Properties Meaningful structural analysis of a building's probable seismic behavior and reliable design of retrofit measures require good understanding of the existing components (such as beams, columns, and diaphragms), their interconnection, and their material properties (mainly the mechanical properties, such as strength, deformability, and toughness). The strength and deformation capacity of existing components should be computed, as specified in Chapters 8 through 13, based on derived material properties and detailed component knowledge. Existing component action strengths must be determined for two basic purposes: to allow calculation of their ability to deliver load to other components and to allow determination of their capacity to resist forces and deformations.

3.2.4 Site and Foundation Information Data on foundation configuration and soil surface and subsurface conditions at the site shall be obtained from existing documentation, visual site reconnaissance, or a program of site-specific subsurface investigation in accordance with Chapter 8. A site-specific subsurface investigation shall be performed where Enhanced Performance Objectives are selected, or where insufficient data are available to quantify foundation capacities or determine the presence of geologic site hazards identified in Section 8.2.2. Where historic information indicates that geologic site hazards have occurred in the vicinity of the site, a site-specific subsurface investigation shall be performed to investigate the potential for geologic site hazards at the site. Use of applicable existing foundation capacity or geologic site hazard information available for the site shall be permitted.

A site reconnaissance shall be performed to observe variations from existing building drawings, foundation modifications not shown on existing documentation, the presence of adjacent development or grading activities, and evidence of poor foundation performance.

C3.2.4 Site and Foundation Information Sources of applicable existing site and foundation information include original design information, foundation capacity information included on the drawings, and previous geotechnical reports for the site or for other sites in the immediate vicinity.

Adjacent building development or grading activities that impose loads on or reduce the lateral support of the structure can affect building performance in a future earthquake. Evidence of poor foundation performance includes settlement of building floor slabs and foundations, differential movement visible at adjacent exterior sidewalks, and other miscellaneous site construction.

3.2.5 Adjacent Buildings Sufficient data shall be collected on the configuration and separation of adjacent structures to permit investigation of the interaction issues identified in Sections 3.2.5.1 through 3.2.5.3 where required by the selected procedure. If the necessary information on adjacent structures is not available, the potential consequences of the interactions that are not being evaluated shall be documented.

3.2.5.1 Building Pounding Data shall be collected to permit evaluation of the effects of building pounding, wherever a portion of an adjacent structure is located within 4% of the height above grade at the location of potential impact.

C3.2.5.1 Building Pounding Building pounding can alter the basic response of the building to ground motion and impart additional inertial loads and energy to the building from the adjacent structure. Of particular concern is the potential for extreme local damage to structural elements at the zones of impact, particularly where the floor and roof levels of adjacent building do not align in height.

3.2.5.2 Shared Element Condition Data shall be collected on adjacent structures that share common vertical- or seismic-force-resisting elements with the building to permit investigation of the implications of the adjacent structure's influence on the performance of the investigated building in accordance with the selected evaluation procedure.

C3.2.5.2 Shared Element Condition Buildings sharing common elements, such as party walls, have several potential problems. If the buildings attempt to move independently, one building may pull the shared element away from the other, resulting in a partial collapse. If the buildings behave as an integral unit, the additional mass and inertial loads of one structure may result in extreme demands on the seismic-force-resisting system of the other. All instances of shared elements should be reported to the building owner, and the owner should be encouraged to inform adjacent building owners of identified hazards.

3.2.5.3 Hazards from Adjacent Buildings Data on hazards posed to the subject building by adjacent buildings and their elements shall be collected to permit consideration of their potential to damage the subject building as a result of an earthquake. If there is a potential for such hazards from an adjacent building, the authority having jurisdiction over the subject building shall be informed of the effect of such hazards on achieving the selected Performance Objective.

C3.2.5.3 Hazards from Adjacent Buildings Hazards from adjacent buildings, such as falling debris, rooftop equipment and tanks, cladding panels, aggressive chemical leakage, fire, or explosion that may affect building performance or the operation of the building after an earthquake should be considered and discussed with the building owner. Consideration should be given to hardening those portions of the building that may be impacted by debris or other hazards from adjacent structures. Where Immediate Occupancy Performance is desired and ingress to the building may be impaired by such hazards, consideration should be given to providing suitably resistant access to the building. Sufficient information should be collected on adjacent structures to allow preliminary evaluation of the likelihood and nature of hazards, such as potential falling debris, fire, and blast pressures. Evaluations similar to those in FEMA 154 (FEMA 1988) may be adequate for this purpose.

3.3 EVALUATION AND RETROFIT PROCEDURES

Seismic evaluation or retrofit of the building shall be performed to demonstrate compliance with the selected Performance Objective in accordance with the requirements of the following sections. Section 3.3.1 covers the limitations on the use of the Tier 1 and Tier 2 procedures. Section 3.3.2 addresses the Tier 1 screening procedure for evaluation. Section 3.3.3 addresses the Tier 2 deficiency-based procedures for evaluation and retrofit. Section 3.3.4 addresses the Tier 3 systematic procedures for evaluation and retrofit.

A building defined as one of the common building types, or those buildings that have seismic isolation or supplemental energy dissipation systems installed, that meet the requirements of Section 4.3, Benchmark Buildings, shall be deemed to meet the Basic Performance Objective for Existing Buildings (BPOE). The nonstructural performance must still be evaluated.

3.3.1 Limitations on the Use of the Tier 1 and 2 Evaluation and Retrofit Procedures The Tier 1 screening and Tier 2 deficiency-based procedures shall be permitted to demonstrate compliance with the performance objectives of this standard for the following Performance Levels:

- Structural Performance Levels: Immediate Occupancy (S-1), Damage Control (S-2), or Life Safety (S-3)
- Nonstructural Performance Levels: Position Retention (N-B) and Life Safety (N-C)

In addition, Tier 1 and Tier 2 procedures are permitted only for buildings that conform to the limitations of Section 3.3.1.1 or 3.3.1.2.

The Tier 3 systematic procedures may be used for evaluation and retrofit to demonstrate compliance with the performance objectives of this standard for any Structural Performance Level or Nonstructural Performance Level and for any building type. The Tier 3 procedure shall be used where use of the Tier 1 and Tier 2 procedures is not permitted.

C3.3.1 Limitations on the Use of the Tier 1 and 2 Evaluation and Retrofit Procedures The primary intent of the Tier 1 screening and Tier 2 deficiency-based procedures is to evaluate and, where warranted, reduce seismic risk efficiently, where possible and appropriate, by using simplified procedures targeted to specific building types. The Tier 1 and Tier 2 procedures are less complicated than the complete analytical evaluation and retrofit design procedures found under the Tier 3 systematic procedures.

The purpose of Table 3-2 is to identify buildings where the Tier 1 screening and Tier 2 deficiency-based procedures alone may not be adequate to come to the correct conclusion about the building's seismic performance and a more rigorous procedure

Table 3-2. Limitations on the Use of the Tier 1 and Tier 2 Procedures

	Number of Stories[b] beyond which the Tier 3 Systematic Procedures Are Required							
	Level of Seismicity							
	Very Low		Low		Moderate		High	
Common Building Type[a]	S-3	S-1	S-3	S-1	S-3	S-1	S-3	S-1
Wood Frames								
Light (W1)	NL	NL	NL	4	4	4	4	4
Multi-story, multi-unit residential (W1a)	NL	NL	NL	6	6	6	6	4
Commercial and industrial (W2)	NL	NL	NL	6	6	6	6	4
Steel Moment Frames								
Rigid diaphragm (S1)	NL	NL	NL	12	12	8	8	6
Flexible diaphragm (S1a)	NL	NL	NL	12	12	8	8	6
Steel Braced Frames								
Rigid diaphragm (S2)	NL	NL	NL	8	8	8	8	6
Flexible diaphragm (S2a)	NL	NL	NL	8	8	8	8	6
Steel Light Frames (S3)	NL	1	1	1	1	1	1	1
Dual Systems with Backup Steel Moment Frames (S4)	NL	NL	NL	12	12	8	8	6
Steel Frames with Infill Masonry Shear Walls								
Rigid diaphragm (S5)	NL	NL	NL	12	12	8	8	4
Flexible diaphragm (S5a)	NL	NL	NL	12	12	8	8	4
Steel Plate Shear Wall (S6)	NP[c]	NP[c]	NP[c]	NP[c]	NP[c]	NP[c]	NP[c]	NP[c]
Concrete Moment Frames (C1)	NL	NL	NL	12	12	8	8	6
Concrete Shear Walls								
Rigid diaphragm (C2)	NL	NL	NL	12	12	8	8	6
Flexible diaphragm (C2a)	NL	NL	NL	12	12	8	8	6
Concrete Frame with Infill Masonry Shear Walls								
Rigid diaphragm (C3)	NL	NL	NL	12	12	8	8	4
Flexible diaphragm (C3a)	NL	NL	NL	12	12	8	8	4
Precast or Tilt-Up Concrete Shear Walls								
Flexible diaphragm (PC1)	NL	NL	3	2	2	2	2	2
Rigid diaphragm (PC1a)	NL	NL	3	2	2	2	2	2
Precast Concrete Frames								
With shear walls (PC2)	NL	NL	NL	6	6	NP	4	NP
Without shear walls (PC2a)	NL	NL	NL	6	6	NP	4	NP
Reinforced Masonry Bearing Walls								
Flexible diaphragm (RM1)	NL	NL	NL	8	8	8	8	6
Rigid diaphragm (RM2)	NL	NL	NL	8	8	8	8	6
Unreinforced Masonry Bearing Walls								
Flexible diaphragm (URM)	NL	NL	6	4	6	NP	4	NP
Rigid diaphragm (URMa)	NL	NL	6	4	6	NP	4	NP
Seismic Isolation or Passive Dissipation	NP[c]	NP[c]	NP[c]	NP[c]	NP[c]	NP[c]	NP[c]	NP[c]

NOTE: The Tier 3 systematic procedures are required for buildings with more than the number of stories listed herein.
[a]Common building types are defined in Section 3.2.1.
[b]Number of stories shall be considered as the number of stories above lowest adjacent grade.
NL = No Limit (No limit on the number of stories).
NP = Not Permitted (Tier 3 systematic procedures are required).
[c]No deficiency-based procedures exist for these building types. If they do not meet the Benchmark Building requirements, Tier 3 systematic procedures are required

is required to meet the objectives of this standard. If the number of stories exceeds the limits in Table 3-2, the more detailed Tier 3 systematic procedures are required to adequately evaluate or retrofit the building.

In many cases, deficiency-based retrofit represents a cost-effective improvement in seismic performance, and it often requires less detailed evaluation or partial analysis to qualify for a specific performance level. Partial Retrofit Objective measures, which target high-risk building deficiencies such as parapets and other exterior falling hazards, are included as deficiency-based techniques. Partial Retrofit Objective measures need not be limited to buildings that conform to the limitations of Table 3-2. Acceptance of the specific partial retrofit method for regulatory purposes depends on the authority having jurisdiction.

Regardless of whether it is permitted for use, the Tier 1 screening in Chapter 4 is a good starting point for the identification of potential deficiencies for any building type covered here and being evaluated using this standard.

3.3.1.1 Buildings Conforming to One of the Common Building Types Where a building conforms to one of the Common Building Types contained in Table 3-1, the limitations in Table 3-2 with regard to building size, Structural Performance Level, and Level of Seismicity determine whether the Tier 1

screening and Tier 2 deficiency-based procedures are allowed to demonstrate compliance with the Performance Objectives of this standard.

3.3.1.2 Buildings Composed of More than One of the Common Building Types The limitations in this section apply to mixed seismic-force-resisting systems defined as combinations of the Common Building Types in either the same or different directions. In all cases, each individual seismic-force-resisting system, as defined in the following sections, must conform to one of the Common Building Types. The Tier 1 and Tier 2 procedures are not permitted to demonstrate compliance with the Performance Objectives of this standard for mixed systems except as indicated in the following sections.

C3.3.1.2 Buildings Composed of More than One of the Common Building Types Although the Tier 1 and Tier 2 procedures are based on experience with buildings conforming to one of the Common Building Types in Table 3-1, there are conditions where the Tier 1 and Tier 2 procedures are valid indicators of performance in a building with more than one type of seismic-force-resisting system. Examples of such combinations are noted in the commentary of the following sections.

3.3.1.2.1 Combinations of Systems in Different Directions It is acceptable to use the Tier 1 and Tier 2 procedures to demonstrate compliance with a Performance Objective for a building with a different seismic-force-resisting system in each principal direction provided the seismic-force-resisting systems in both directions conform to a Common Building Type in Table 3-1 and the building satisfies the height limits in Table 3-2 for the system with the lesser of the allowed height limit in both directions.

C3.3.1.2.1 Combinations of Systems in Different Directions Where a building consists of different systems in each of the two principal directions, the systems can be evaluated and retrofitted somewhat independently using the Tier 1 and Tier 2 procedures. An example is a concrete building with shear walls (C2) in one direction and moment frames (C1) in the orthogonal direction.

3.3.1.2.2 Combinations of Systems in the Same Direction It is acceptable to use Tier 1 and Tier 2 procedures to demonstrate compliance with a performance objective for a building with a combination of different seismic-force-resisting systems in a single principal direction subject to the requirements of Sections 3.3.1.2.2.1 for horizontal combinations, 3.3.1.2.2.2 for vertical combinations, and 3.3.1.2.2.3 for combinations of stiff and flexible diaphragms. Otherwise, the Tier 3 procedures shall be used for such evaluations and retrofit.

Alternatively, the Tier 1 and Tier 2 procedures shall be permitted to demonstrate compliance for a building with more than one type of seismic-force-resisting system along a single axis of the building, including changes over the height of the building, if the building is being evaluated for the Life Safety Performance Level and all statements in the Basic Configuration Checklist of Section 16.1.2 are found to be "Compliant."

C3.3.1.2.2 Combinations of Systems in the Same Direction Under certain conditions, the Tier 1 and Tier 2 procedures are considered valid indicators of performance for mixed systems. Sections 3.3.1.2.2.1 through 3.3.1.2.2.3 provide three specific cases where the checklists and deficiency-based procedures can be used because the mixed systems can be evaluated individually with sufficient certainty and reliability.

In addition, where no irregularities exist, multiple checklists can be used for evaluating combinations of systems without the additional restrictions in Sections 3.3.1.2.2.1 through 3.3.1.2.2.3. In this condition, design professionals must use appropriate judgment in completing some of the Quick Check procedures in Section 4.5 because of the potential complexity of determining average stress levels across different seismic-force-resisting systems. If any statements in the Basic Configuration Checklist are found to be "Noncompliant" or "Unknown," then because of the presence of an irregularity, the combination of systems is judged to be too different from the assumptions inherent in the Common Building Types that serve as the basis for the Tier 1 and Tier 2 procedures. Tier 3 is required for that condition unless the building, even with irregularities, meets the requirements of Sections 3.3.1.2.2.1 through 3.3.1.2.2.3.

3.3.1.2.2.1 Horizontal Combinations The Tier 1 and Tier 2 procedures shall be permitted for a building with a horizontal combination of two seismic-force-resisting systems in the same direction provided the following criteria are satisfied:

- The Performance Level is Life Safety (S-3) Performance Level.
- The building possesses seismic-force-resisting systems conforming to one or two of the Common Building Types in Table 3-1 in each principal direction.
- Each line of resistance in each direction conforms to one of the Common Building Types in Table 3-1.
- The building has flexible diaphragms at all levels above the base of the structure.
- The building height complies with the lowest height limit in Table 3-2 for any system in the direction under consideration.
- Where the Tier 1 checklists require the use of Quick Check procedures in Section 4.5, seismic forces are distributed to the vertical elements of the seismic-force-resisting system based on tributary areas.

C3.3.1.2.2.1 Horizontal Combinations An example of a building meeting the requirements of this section is a Precast or Tilt-Up Concrete Shear Wall building (PC1) with a wood structural panel diaphragm and a line of steel braced frames (S2) in the interior.

3.3.1.2.2.2 Vertical Combinations The Tier 1 and Tier 2 procedures shall be permitted for a building with a vertical combination of two seismic-force-resisting systems in the same direction, provided the following criteria are satisfied:

- The Performance Level is Life Safety (S-3) Performance Level.
- Each story consists of a seismic-force-resisting system conforming to one of the Common Building Types in Table 3-1.
- The total building height complies with the lowest height limit in Table 3-2 for any system in the direction under consideration.

C3.3.1.2.2.2 Vertical Combinations An example of a building meeting the requirements of this section is a multi-story, multi-unit, residential, wood light frame structure (W1A) over a one-story concrete shear wall structure (C2) at the base.

3.3.1.2.2.3 Combinations of Stiff and Flexible Diaphragms The Tier 1 and Tier 2 procedures shall be permitted for a building with a seismic-force-resisting system with a stiff diaphragm on the lower floors and the same seismic-force-resisting system with a flexible diaphragm on the upper floors as long as the total building height meets the more restrictive limitation for the Common Building Type in Table 3-2.

C3.3.1.2.2.3 Combinations of Stiff and Flexible Diaphragms An example of a building meeting the requirements of this section is a reinforced masonry bearing wall building with concrete diaphragms at the floor levels (RM2) and a bare steel deck diaphragm at the roof (RM1).

3.3.2 Tier 1 Screening Procedure Where a seismic evaluation is to use the Tier 1 and Tier 2 procedures as permitted by Table 3-2, seismic evaluation shall begin with the Tier 1 screening procedure, conducted in accordance with the requirements of Chapter 4. Benchmark Building criteria shall be checked in accordance with Section 4.3. Checklists, as applicable, of compliant–noncompliant statements related to structural, nonstructural, and foundation conditions shall be selected and completed in accordance with the requirements of Section 4.4 (Table 4-7).

The Tier 1 screening procedure shall be used only for seismic evaluation to demonstrate compliance with a Basic Performance Objective for Existing Buildings (BPOE) as defined in Section 2.2.1 and is not permitted to demonstrate compliance with the Basic Performance Objectives Equivalent to New Building Standards (BPON), as defined in Section 2.2.4. The Tier 1 procedure includes acceptance criteria for the Immediate Occupancy and Life Safety Structural Performance Levels (S-1 and S-3) and for the Position Retention and Life Safety Nonstructural Performance Levels (N-B and N-C).

C3.3.2 Tier 1 Screening Procedure The Tier 1 screening procedure consists of several sets of checklists that allow a rapid evaluation of the structural, nonstructural, and foundation and geologic hazard elements of the building and site conditions. The purpose of a Tier 1 procedure is to screen out buildings that comply with the provisions of this standard or to quickly identify potential deficiencies. In some cases, Quick Checks may be required during a Tier 1 screening; however, the level of analysis necessary is minimal. If deficiencies are identified for a building using the checklists, the design professional may proceed to Tier 2 and conduct a more detailed evaluation of the building or conclude the evaluation and state that potential deficiencies were identified.

3.3.3 Tier 2 Deficiency-Based Evaluation and Retrofit Procedures For buildings satisfying the criteria for the applicability of the Tier 2 deficiency-based procedures and for which potential deficiencies were identified in the Tier 1 screening, a Tier 2 deficiency-based evaluation or retrofit may be performed in accordance with this section and Chapter 5.

The Tier 2 deficiency-based procedure shall be used to demonstrate compliance of an existing or retrofit building with the Basic Performance Objective for Existing Buildings (BPOE), as defined in Section 2.2.1 and is not permitted to demonstrate compliance with the Basic Performance Objective Equivalent to New Building Standards (BPON), as defined in Section 2.2.4. The Tier 2 procedure includes acceptance criteria for the Immediate Occupancy and Life Safety Structural Performance Levels (S-1 and S-3) and for the Position Retention and Life Safety Nonstructural Performance Levels (N-B and N-C).

C3.3.3 Tier 2 Deficiency-Based Evaluation and Retrofit Procedures The Tier 2 deficiency-based procedures reflect a level of analysis and design that is appropriate for small, relatively simple buildings and buildings that do not require advanced analytical procedures because the common deficiencies are relatively well understood and the mitigation techniques are generally straightforward. The procedures are limited to specific sets of defined performance objectives.

The Tier 2 procedures may yield a more conservative result than the Tier 3 procedures because of a variety of simplifying assumptions.

3.3.3.1 Evaluation Requirements For a Tier 2 deficiency-based evaluation, only the potential deficiencies identified by the noncompliant checklist statements need be assessed.

If the Tier 2 evaluation procedure in Chapter 5 demonstrates compliance for all of the Tier 1 checklist statements that were identified as noncompliant, then the building is deemed to comply with the selected Performance Objective.

C3.3.3.1 Evaluation Requirements For the Tier 2 procedure, an analysis of the building that addresses all of the potential deficiencies identified in Tier 1 screening shall be performed. Analysis in Tier 2 is limited to simplified linear analysis methods. As in Tier 1, evaluation in Tier 2 is intended to identify buildings not requiring retrofit. If the potential deficiencies identified in the Tier 1 screening are confirmed during the Tier 2 evaluation, the design professional may choose to either conclude the evaluation and report the deficiencies or proceed to Tier 3 and conduct a more comprehensive, systematic seismic evaluation.

For checklist statements identified as "unknown" in the Tier 1 checklists, the design professional may, upon determining the information necessary for assessing the specific element, either use the Tier 1 or Tier 2 procedures for determining compliance.

3.3.3.2 Retrofit Requirements The Tier 2 deficiency-based retrofit procedure may be used for the Basic Performance Objective for Existing Buildings (BPOE), as defined in Section 2.2.1. The retrofit shall comply with the conditions specified in Section 2.2.3.

Construction documents, including drawings, specifications, and a quality assurance plan, shall be developed as defined in Chapter 1.

Where the Tier 2 deficiency-based retrofit procedure is used to achieve a Partial Retrofit Objective as defined in Section 2.2.3.2, retrofit measures shall be developed in accordance with Section 5.8 such that selected deficiencies identified by the Tier 2 evaluation are eliminated. The deficiencies selected for mitigation shall be retrofitted to comply with the requirements of the Tier 2 retrofit procedures for the selected Performance Level.

Where the Partial Retrofit Objective addresses architectural, mechanical, and electrical components, retrofit measures shall be developed in accordance with Chapter 13 for the selected Nonstructural Performance Level.

C3.3.3.2 Retrofit Requirements For relatively simple buildings with specific deficiencies, it is possible and advisable to prioritize the retrofit measures. This prioritization is often done where the construction has limited funding or must take place while the building is occupied. In both cases, it is preferable to correct the worst deficiency first. Refer to the Section C5.8 for additional commentary on the prioritization of seismic deficiencies.

If only a Partial Retrofit Objective is intended, deficiencies should be corrected in priority order and in a way that will facilitate fulfillment of the requirements of a higher objective at a later date. Care must be taken to ensure that a Partial Retrofit Objective effort does not make the building's overall performance worse by unintentionally channeling failure to a more critical component.

3.3.4 Tier 3 Systematic Evaluation and Retrofit Procedures

3.3.4.1 Evaluation Requirements A Tier 3 systematic evaluation shall be performed in accordance with the requirements of Chapter 6 where required by Section 3.3.1.

C3.3.4.1 Evaluation Requirements Recent research has shown that certain types of complex structures can be shown to be adequate using nonlinear analysis procedures, even though other common procedures do not. Though these procedures are complex and expensive to carry out, they often result in construction savings equal to many times their cost.

Tier 3 systematic evaluation may be used at any time or may be used to further study potential deficiencies identified in Tier 1 or Tier 2 evaluations.

3.3.4.2 Retrofit Requirements The Tier 3 systematic retrofit procedure in Chapter 6 shall be permitted for all retrofit designs and shall be required where Tier 2 deficiency-based retrofit is not permitted in accordance with Section 3.3.1.

The Tier 3 systematic retrofit procedure includes the following steps:

1. An evaluation shall be performed to identify potential seismic deficiencies.
2. A preliminary retrofit scheme shall be developed using one or more of the retrofit strategies defined in Section 1.5.
3. An analysis of the building, including retrofit measures, shall be performed, to verify that the retrofit design meets the selected Performance Objective.
4. Construction documents, including drawings, specifications, and a quality assurance plan, shall be developed as defined in Chapter 1.

C3.3.4.2 Retrofit Requirements Tier 3 systematic retrofit may be applied to any building and involves thorough checking of each existing structural component, the design of new ones, and verification of acceptable overall performance represented by expected displacements and internal forces. The Tier 3 procedure focuses on the nonlinear behavior of structural response and uses advanced analysis techniques.

This page intentionally left blank

CHAPTER 4
TIER 1 SCREENING

4.1 SCOPE

This chapter contains the requirements for performing a Tier 1 screening where it is permitted in accordance with Section 3.3. The Tier 1 process is shown schematically in Fig. 4-1.

The Performance Level, Seismic Hazard Level, and Level of Seismicity shall be determined in accordance with Sections 4.1.1, 4.1.2, and 4.1.3, respectively.

Section 4.2 specifies the requirements for the level of investigation of as-built conditions, performing site visits, and determining the building type.

Initially, the design professional shall determine whether the building meets the Benchmark Building criteria of Section 4.3. If the building meets the Benchmark Building criteria, it is deemed to meet the structural requirements of this standard for the specified level of performance; however, a Tier 1 screening for nonstructural elements is still required.

If the building does not satisfy the criteria for Benchmark Buildings, the design professional shall select and complete the appropriate checklists in accordance with Section 4.4. The checklists themselves are contained in Chapter 16. Section 4.5 contains the Tier 1 analysis provisions for use with the Tier 1 checklists.

A list of potential deficiencies identified by evaluation statements for which the building was found to be noncompliant shall be compiled upon completion of the Tier 1 checklists.

C4.1 SCOPE

The purpose of the Tier 1 screening phase of the evaluation process is to quickly identify buildings that comply with the provisions of this standard. A Tier 1 screening also familiarizes the design professional with the building, its potential deficiencies, and its potential behavior.

A Tier 1 screening is required for all buildings so that potential deficiencies may be quickly identified. Further evaluation using a Tier 2 or Tier 3 evaluation then focuses, at a minimum, on the potential deficiencies identified in Tier 1. Alternatively, the design professional may choose to end the investigation and report the deficiencies in accordance with Chapter 1 or, after consultation with the owner, may choose to proceed to a retrofit design without performing a Tier 2 or Tier 3 evaluation.

4.1.1 Performance Level A target Performance Level shall be defined before conducting a seismic evaluation using this standard. The Performance Level shall be determined by the owner in consultation with the design professional and by the authority having jurisdiction, if required. The Tier 1 screening may be performed for one or both of the following two Building Performance Levels as defined in Section 2.3: Life Safety (S-3, N-C) and Immediate Occupancy (S-1, N-B).

4.1.2 Seismic Hazard Level The Seismic Hazard Level for the Tier 1 screening shall be BSE-1E per Table 2-1 for the Basic Performance Objective for Existing Buildings (BPOE).

4.1.3 Level of Seismicity The Level of Seismicity of the building shall be defined as Very Low, Low, Moderate, or High in accordance with Section 2.5.

4.2 SCOPE OF INVESTIGATION REQUIRED

4.2.1 On-Site Investigation and Condition Assessment Tier 1 screening shall be permitted to be based on available construction documents and other records, subject to the findings of an on-site investigation. An on-site investigation shall be conducted to verify general conformance of existing conditions to those described in available documents, to identify significant alterations or deviations from available documents, to supplement incomplete documents, to confirm the general quality of construction and maintenance, and otherwise as needed to complete the applicable Tier 1 checklists.

Where required, limited nondestructive investigation of a representative sample of relevant conditions shall be performed for all Tier 1 Quick Checks.

The on-site investigation shall include investigation of common, likely, or suspected construction defects and deterioration that could have significant effects on seismic performance. The scope of this investigation shall be permitted to be based on the judgment of the evaluator. The findings and documentation of this investigation shall be subject to the approval of the authority having jurisdiction where required.

In setting the scope of this investigation, the evaluator shall consider at least the defect and deterioration types given in Table 4-1.

4.2.2 Building Type The building type shall be classified as one or more of the building types listed in Table 3-1, based on the lateral-force-resisting system(s) and the diaphragm type. Separate building types shall be used for buildings with different lateral-force-resisting systems in different directions.

C4.2.2 Building Type Separate checklists for each of the common building types are included in this standard as well as general structural checklists for buildings that do not fit the descriptions of the common building types.

4.2.3 Default Material Values The use of default values is permitted for material properties for Tier 1 Quick Checks. The following default values are to be assumed unless otherwise indicated by the available construction documents, or by testing. Because these values and properties were taken from Chapters 7–10, refer to these chapters for values of material properties for uses other than Tier 1 Quick Checks.

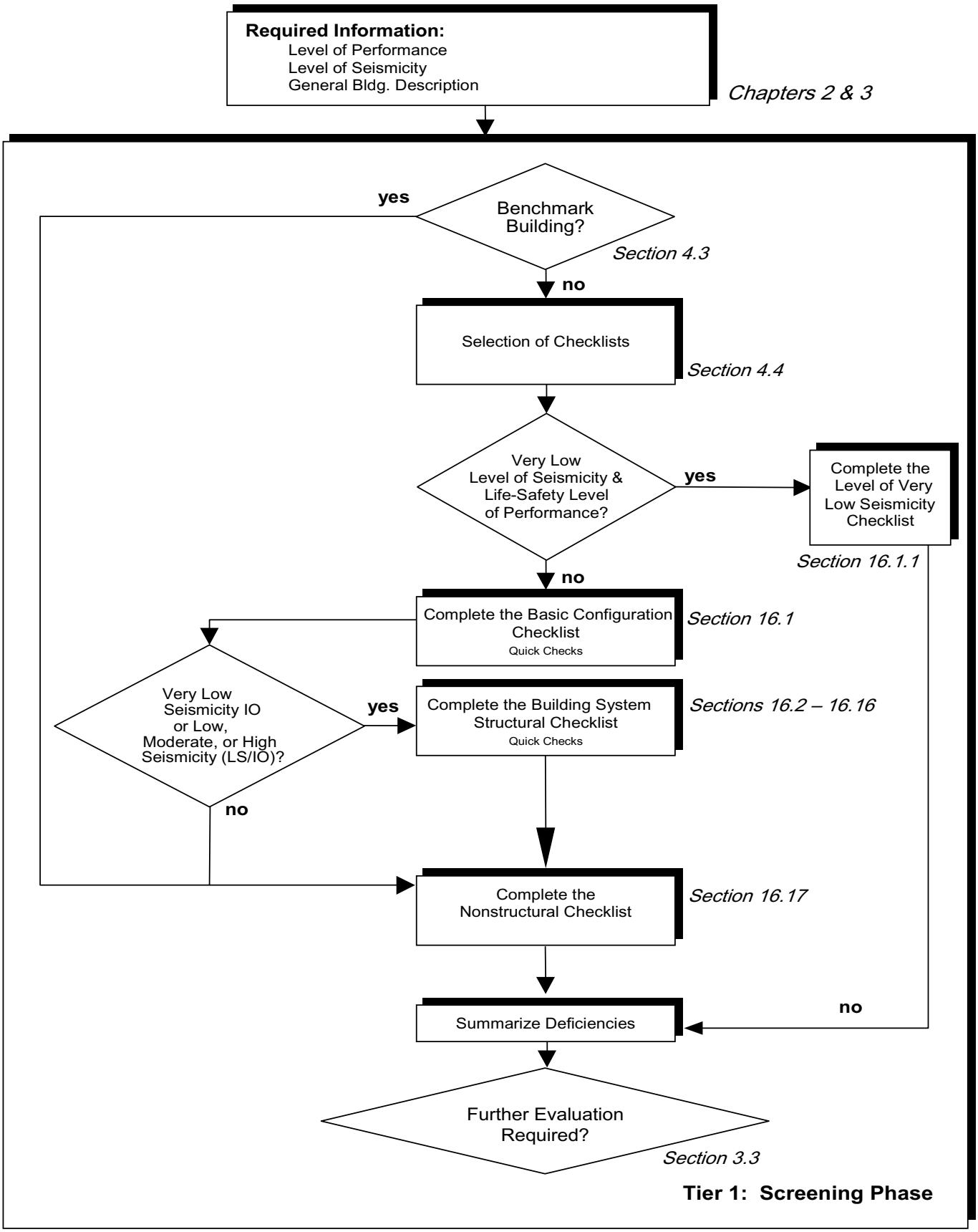

FIG. 4-1. Tier 1 Evaluation Process

Table 4-1. Patterns of Defects and Deterioration

Component or Material	Pattern	Commentary/Tier 2 Reference Sections
Foundation	Evidence of settlement or heave	A.2.3.1, 5.2.3, 5.4.3.2
Foundation elements	Deterioration caused by corrosion, sulfate attack, or material breakdown	A.2.3.1, 5.2.3, 5.4.3.2
Wood	Decay, shrinkage, splitting, fire damage, or sagging in wood members. Deteriorated, broken, or loose metal connection hardware	A.2.3.3, 5.2.3
Wood structural panel shear wall fasteners	Overdriven fasteners, omitted blocking, excessive fastener spacing, or inadequate edge distance	A.2.3.4, 5.2.3
Steel	Visible rusting, corrosion, cracking, or other deterioration	A.2.3.5, 5.2.3
Concrete	Visible deterioration of concrete or reinforcing steel	A.2.3.6, 5.2.3
Concrete walls	Cracks that are 1/16 in. or wider, concentrated in one location or forming an X pattern	A.2.3.7, 5.2.3
Concrete columns encasing masonry infill	Diagonal cracks wider than 1/16 in.	A.2.3.8, 5.2.3
Unreinforced masonry units	Visible deterioration	A.2.3.9, 5.2.3
Unreinforced masonry joints	Eroded mortar or mortar that is easily scraped away from the joints by hand with a metal tool	A.2.3.10, 5.2.3
Unreinforced masonry walls	Voids or missing grout in collar joints along with the lack of header courses of multi-wythe walls	A.3.2.5.3, 5.2.3
Infill masonry walls	Diagonal or stepped cracks more than 1/16 in. wide that extend throughout a panel, or out-of-plane offsets wider than 1/16 in. in masonry joints	A.2.3.12, 5.2.3
Post-tensioning anchors	Corrosion or spalling in the vicinity of post-tensioning or end fittings	A.2.3.13, 5.2.3
Precast concrete walls	Visible deterioration of concrete or reinforcing steel, or evidence of distress, especially at the connections	A.2.3.14, 5.2.3
Reinforced masonry walls	Cracks that are 1/16 in. or wider, concentrated in one location or forming an X pattern	A.2.3.15, 5.2.3
Masonry veneer	Deterioration, damage, or corrosion in connections	A.7.5.4, 13.6.1
Masonry veneer	Eroded mortar or mortar that is easily scraped away from the joints by hand with a metal tool	A.7.5.5, 13.6.1
Masonry veneer	Visible cracks or distortion in the stone	A7.5.7, 13.6.1
Hazardous material equipment	Damaged supply lines	A.7.12.2
Mechanical or electrical equipment	Deterioration, damage, or corrosion in anchorage or supports	A.7.12.3, 13.7
Cladding	Deterioration, damage, or corrosion in connections	A.7.4.2, 13.6.1

Table 4-2. Default Compressive Strengths ($f'c$) of Structural Concrete (kip/in.^{2})

Time Frame	Beams	Slabs and Columns	Walls
1900–1919	2	1.5	1
1920–1949	2	2	2
1950–1969	3	3	2.5
1970–Present	3	3	3

f_c' = (See Table 4-2)
f_y = (See Table 4-3)
F_y = (See Tables 4-4 and 4-5)
E (structural steel) = 29,000 kip/in.^{2}
F_{pe} = 25 kip

C4.2.3 Default Material Properties This standard does not permit the use of default material properties for Tier 2 and Tier 3 evaluations without the application of the knowledge factor, κ. Although the default material properties herein are reproduced from Chapters 9 through 12, application of κ is not required because, as explained in more detail below, these properties are conservative versions of those presented in Chapters 9 through 12. The default values for f_c' (in Table 4-2) are taken from Table 10-2 (i.e., the lowest values of the ranges given in Table 10-3 appear in Table 4-2), and the slab and column values are merged into a single column in the table because their respective "lower values" are identical.

No default values for E for concrete are provided because the Quick Checks that require a value for E (i.e., story drift for moment frame) are not triggered for any of the concrete checklists. If for some reason a value of E for concrete is needed in performing a Tier 1 screening, it is recommended that it be derived using the equation applicable to normal-weight concrete in ACI 318 (2011): $E_c = 57{,}000\sqrt{f_c'}$.

The default values for f_y (in Table 4-3) are taken from Table 10-3.

The default values for F_y (in Tables 4-4 and 4-5) are taken from Tables 9-1 and 9-2. Regarding Table 4-4, because of the prevalence of ASTM A9 steel from 1900 to 1931, the first four rows of Table 9-2 were collapsed into one row using the minimum values for the three types of steel (rivet, medium, and structural). Also, only the values of F_y for Group 4 from three of the last four rows of Table 9-1 (i.e., 1961–1990, 1961–Present, and 1990–Present) appear. These values are given because the Group 4 F_y is always the minimum value of the various groups.

The default value for F_{pe} is based on a ½-in.-diameter strand of ASTM A 416 (2002b) material (i.e., breaking strength = 270 kip/in.^{2}, and effective prestress = 0.6 × breaking strength). It should be noted that this default material property is retained from ASCE 31-03 (2003).

When evaluating a building using this standard, the design professional should

- look for an existing geotechnical report on site soil conditions;
- establish site and soil parameters;
- assemble building design data, including contract drawings, specifications, and calculations;
- look for other data, such as assessments of the building performance during past earthquakes; and
- select and review the appropriate sets of evaluation statements included in Section 4.4.

Table 4-3. Default Yield Strengths (f_y) of Reinforcing Steel (kip/in.^{2})

		Structural[a]	Intermediate[a]	Hard[a]				
	Grade	33	40	50	60	65	70	75
Year	Minimum Yield[a] (kip/in.^{2})	33	40	50	60	65	70	75
1911–1959		X	X	X		X		
1959–1966		X	X	X	X	X	X	X
1966–1987			X	X	X	X	X	
1987–present			X	X	X	X	X	X

Note: An entry of X indicates that the grade was available in those years.
[a]The terms structural, intermediate, and hard became obsolete in 1968.

Table 4-4. Default Yield Strengths (F_y) of Archaic Materials

Year	Material	Yield Strength (kip/in.^{2})
Pre-1900	Cast iron	18
Pre-1900	Steel	24

Notes: Modified from unit stress values in AISC *Iron and Steel Beams 1873–1952* (1983). Properties are based on tables of allowable loads as published in mill catalogs.

4.3 BENCHMARK BUILDINGS

A structural seismic evaluation using this standard need not be performed for buildings designed and constructed or evaluated in accordance with the benchmark provisions of this section. However, an evaluation of nonstructural elements in accordance with Section 16.17 is still required. Buildings that meet the provisions of this section satisfy BSE-1E for the designated Performance Level. The provisions of this section do not apply to buildings in Very Low Seismicity, as defined in Section 2.5.

This section considers the provisions under which the structure was originally designed, retrofitted, or previously evaluated that are considered to meet the BSE-1E requirements for the designated Performance Level. Buildings that have been fully retrofitted shall be evaluated using the standards used for the retrofit, not the original design provisions. The edition of a design code or provisions or the retrofit standard that sets the benchmark year is indicated in Table 4-6. The design professional shall document the evidence used to determine that the building complies with the provisions of this section.

The existing building must comply with Sections 4.3.1 through 4.3.4. If the building is determined to be noncompliant with any of these sections or compliance cannot be determined, the structure does not meet the Benchmark Building provisions of this section, and a Tier 1 screening is required.

The applicable Performance Level is indicated in Table 4-6 for each provision as a superscript.

C4.3 BENCHMARK BUILDINGS

The methodology in this standard is substantially compatible with building code provisions; however, the nature of the methodology is such that complete compatibility may not be achievable. From observed earthquake damage, it can be inferred that certain building types designed and constructed to recent building codes can be expected to provide Life Safety-level performance. However, without Benchmark Building provisions, even those recent structures would need to be evaluated to show compliance with this standard. Although many buildings pass the Tier 1 screening as compliant, the conservative nature of the standard is such that some adequate buildings would be found noncompliant. The intent of this section is to resolve this incompatibility by recognizing structure types and code editions that have provided Life Safety-level performance in past earthquakes.

Although Benchmark Buildings need not proceed with further structural evaluation, it should be noted that they are not simply exempt from the criteria of this standard. The design professional must determine and document that the building complies with the benchmark provisions of Sections 4.3.1 through 4.3.4.

Because nonstructural components have been found routinely to have been designed, installed, or modified without enforcement of applicable building code provisions (Masek and Ridge 2009), benchmark provisions do not apply to evaluation of nonstructural components.

The Benchmark Building provisions are optional. A design professional may choose to perform a structural Tier 1 screening, even if the building meets the requirements of Section 4.3.

In some areas, the design seismicity may have changed since the building was originally designed. Slight changes in the seismicity are not expected to result in a change in the Level of Seismicity for the purposes of Tier 1 screening because the building code adoption dates for most of the benchmark codes are no older than 1993. There are some exceptions, such as light wood frame buildings and low-rise concrete and reinforced masonry shear wall buildings. These buildings generally present a low risk of collapse, so changes in the Level of Seismicity should not affect the ability to benchmark the building for the Life Safety Performance Level. Conversely, if the design of the building is known to have neglected or inadequately addressed the applicable seismic design provisions, the building should not be benchmarked.

Table 4-6 identifies the first year of publication of provisions whose seismic criteria are acceptable for certain building types, so that further structural evaluation is not required. The intention of Table 4-6 is that buildings designed to the specific code would be benchmarked, not buildings that were designed to an earlier code but can be shown to meet the provisions of the benchmark code.

4.3.1 Existing Documents Review of the record drawings of the structure shall be performed to confirm that the primary elements of the seismic-force-resisting system and their detailing were intended to be designed in accordance with the applicable provisions listed in Table 4-6.

C4.3.1 Existing Documents The evaluating design professional must determine that the building is in general compliance with the benchmark provisions of Table 4-6. The reason for this requirement is that sometimes the building is not properly detailed to meet the provisions of the benchmark code or standard. The intent is to require the evaluating engineer to consider the actual design of the structure, not just the code that was said to have applied. Even with this requirement, the expectation is

Table 4-5. Default Yield Strengths (F_y) of Structural Steel

Date	Specification	Remarks	Yield Strength[a] (kip/in.^{2})
1900	ASTM A9	Rivet steel	50
	Buildings	Medium steel	60
1901–1908	ASTM A9	Rivet steel	50
	Buildings	Medium steel	60
1909–1923	ASTM A9	Structural steel	55
	Buildings	Rivet steel	50
1924–1931	ASTM A7	Structural steel	55
		Rivet steel	50
	ASTM A9	Structural steel	55
		Rivet steel	50
1932	ASTM A140-32T issued as a tentative revision to ASTM A9 (Buildings)	Plates, shapes, bars	33
		Eyebar flats (unannealed)	36
1933	ASTM A140-32T discontinued and ASTM A9 (Buildings) revised Oct. 30, 1933	Structural steel	30
	ASTM A141-32T adopted as a standard	Rivet steel	30
1934–Present	ASTM A9	Structural steel	33
	ASTM A141	Rivet steel	28
1961–1990	ASTM A36/A36M-04 (2004a)	Structural steel	37
1961–Present	ASTM A572/A572M-04 (2004b), Grade 50	Structural steel	50
1990–Present	ASTM A36/A36M-04 (2004a) and Dual Grade	Structural steel	49
1998–Present	ASTM A992/A992M-04 (2004c)	Structural steel	50

NOTES: Values for material before 1960 are based on minimum specified values. Values for material after 1960 are mean minus one standard deviation values from statistical data. Values are based on ASTM and AISC structural steel specification stresses.
[a]Values are representative of material extracted from the flanges of wide flange shapes (i.e., for non-rivet steel).

that most buildings that qualify for benchmarking will not require any detailed review of original calculations or old code provisions.

Knowledge that a code was in effect at the time of construction is not sufficient. A statement on the drawings that the building was designed to the provisions of the benchmark code or standard is not sufficient. Rather, the cited drawings must provide evidence that relevant provisions regarding the detailing of primary elements were applied. At a minimum, there must be evidence of an intended lateral load path on the drawings. Although a general reference to the applicable code is not sufficient, specific notes or references regarding the lateral system type (such as specification of the response modification factor R_W or R value used for the design), soil profile type, and other detailing provisions of the code in question provide better evidence. Similarly, the degree of detailing can indicate a conscientious design. The use of generic typical details for varied and complex conditions, or notes calling for detailing by others can indicate an incomplete design that does not qualify for benchmarking. Some judgment by the evaluating design professional is often needed.

For example, for concrete tilt-up wall buildings, the most critical elements are the out-of-plane connections between the diaphragm and the tilt-up panels. Provisions dealing with the specific detailing of these elements were not prevalent until the 1997 UBC. Therefore, if an engineer examines the construction documents and notices that the out-of-plane connections can induce cross-grain ledger bending, then he or she can make a decision that the building does not meet the detailing provision of the benchmark code.

4.3.2 Field Verification Field verification shall be performed to confirm that the building was constructed in general conformance with record drawings and that no modifications have been made that significantly affect the expected performance of the lateral-force-resisting system.

C4.3.2 Field Verification The evaluating design professional must confirm the record drawings with a site visit. The reason for this requirement is that sometimes the existing building has been built to plans different from available design drawings or has been altered since original construction. Also, poor construction quality sometimes compromises the original design. As in Section 4.3.1, the intent is to require the evaluating engineer to consider the actual construction, not just the plans. Even with this requirement, the expectation is that most buildings that qualify for benchmarking do not require any comprehensive or destructive investigation.

The field verification intended by this provision should not require confirmation of every important detail. Rather, the purpose is to rule out with confidence those errors and activities that might cause the structure to perform significantly worse than the confirmed existing documents would suggest. Some judgment by the evaluating engineer is often needed.

In the example given in C4.3.1, the engineer has discovered that two new wall openings have significantly reduced the lateral-force-resisting capacity of the system, and no documentation of this structural modification can be found. Without further evaluation, the engineer cannot conclude that the building meets the benchmark code provisions.

4.3.3 Condition Assessment Field verification confirms that significant deterioration of structural materials has not occurred.

C4.3.3 Condition Assessment Significant deterioration can compromise structural performance. Although the requirement is not as detailed as the condition assessment requirements of Section 4.2.1, the engineer must still determine whether any deterioration discovered will affect the behavior of the lateral-force-resisting system suggested by the confirmed drawings and construction. The Tier 1 condition assessment provisions of Section 4.2.1 may be used as a guide to the scope and nature of the effort needed to satisfy this requirement.

In the example given in Section C4.3.1, the engineer has verified that the out-of-plane anchors are detailed correctly. However, when the engineer goes out to visit the building, he or she notices that a chronic roof drainage problem has corroded half the out-of-plane anchors on one side of the building. Because the force

Table 4-6. Benchmark Buildings

Building Type[a,b]	Building Seismic Design Provisions				Seismic Evaluation or Retrofit Provisions		
	NBC[LS] SBC[LS]	UBC[LS]	IBC[LS]	NEHRP[LS]	FEMA 178[LS]	FEMA 310 (1998e)/ ASCE 31[LS,IO]	FEMA 356 (2000)/ ASCE 41[LS,IO][c,d]
Wood frame, wood shear panels (Types W1 & W2)	1993	1976	2000	1985	[e]	1998	2000
Wood frame, wood shear panels (Type W1a)	[e]	1997	2000	1997	[e]	1998	2000
Steel moment-resisting frame (Types S1 & S1a)	[e]	1994[f]	2000	1997	[e]	1998	2000
Steel concentrically braced frame (Types S2 & S2a)	[e]	1997	2000	[e]	[e]	1998	2000
Steel eccentrically braced frame (Types S2 & S2a)	[e]	1988[f]	2000	1997	[e]	[e]	2000
Buckling-restrained braced frame (Types S2 & S2a)	[e]	[e]	2006	[e]	[e]	[e]	2000
Light metal frame (Type S3)	[e]	[e]	2000	[e]	1992	1998	2000
Steel frame w/ concrete shear walls (Type S4)	1993	1994[?]	2000	1985	[e]	1998	2000
Steel frame with URM infill (Types S5 & S5a)	[e]	[e]	2000	[e]	[e]	1998	2000
Steel plate shear wall (Type S6)	[e]	[e]	2006	[e]	[e]	[e]	2000
Reinforced concrete moment-resisting frame (Type C1)[g]	1993	1994	2000	1997	[e]	1998	2000
Reinforced concrete shear walls (Types C2 & C2a)	1993	1994	2000	1985	[e]	1998	2000
Concrete frame with URM infill (Types C3 & C3a)	[e]	[e]	2000	[e]	[e]	1998	2000
Tilt-up concrete (Types PC1 & PC1a)	[e]	1997	2000	[e]	[e]	1998	2000
Precast concrete frame (Types PC2 & PC2a)	[e]	[e]	2000	[e]	1992	1998	2000
Reinforced masonry (Type RM1)	[e]	1997	2000	[e]	[e]	1998	2000
Reinforced masonry (Type RM2)	1993	1994[?]	2000	1985	[e]	1998	2000
Unreinforced masonry (Type URM)[h]	[e]	1991[i]	2000	[e]	1992	1998	2000
Unreinforced masonry (Type URMa)	[e]	[e]	2000	[e]	[e]	1998	2000
Seismic isolation or passive dissipation	[e]	1991	2000	[e]	[e]	[e]	2000

[a]Building type refers to one of the common building types defined in Table 3-1.
[b]Buildings on hillside sites shall not be considered Benchmark Buildings.
[c]LS: S-3 Structural Performance Level for the BSE-1.
[d]IO: S-1 Structural Performance Level for the BSE-1.
[e]No benchmark year; buildings shall be evaluated using this standard.
[f]Steel moment-resisting frames and eccentrically braced frames with links adjacent to columns shall comply with the 1994 UBC Emergency Provisions, published September/October 1994, or subsequent requirements.
[g]Flat slab concrete moment frames shall not be considered Benchmark Buildings.
[h]URM buildings evaluated or retrofitted and shown to be acceptable using Special Procedure (the ABK Methodology, 1984) may be considered benchmark buildings subject to the limitation of Section 15.2.
[i]Refers to the GSREB or its predecessor, the Uniform Code of Building Conservation (UCBC), or its successor, IEBC Appendix Chapter A1.
[LS]Only buildings designed and constructed or evaluated in accordance with these documents and being evaluated to the Life Safety Performance Level may be considered Benchmark Buildings.
[IO]Buildings designed and constructed or evaluated in accordance with these documents and being evaluated to the Immediate Occupancy Performance Level may be considered Benchmark Buildings.

NBC = *National Building Code*.
SBC = *Standard Building Code*.
UBC = *Uniform Building Code*.
IBC = *International Building Code*.
IEBC = *International Existing Building Code*.
NEHRP = FEMA 368 and 369, *NEHRP Recommended Provisions for the Development of Seismic Regulations for New Buildings* (BSSC 2000).
FEMA 178.
FEMA 310.
FEMA 356.
ASCE 31-03.
ASCE 41-06.

transfer mechanism is now partially compromised, the engineer now concludes that without further evaluation, the building no longer meets the benchmark code provisions.

4.3.4 Geologic Site Hazards There shall be no liquefaction, slope failure, or surface fault rupture hazard present at the building site. Alternatively, if such a hazard is present, the hazard has been mitigated by the design of the lateral-force-resisting system, including foundations.

C4.3.4 Geologic Site Hazards Even if an existing building was properly designed and constructed to the benchmark code, site conditions not explicitly addressed by the benchmark code can compromise performance. Large foundation movements caused by any number of site hazards can severely damage an otherwise seismic-resistant building. Potential causes of significant foundation movement include settlement or lateral spreading caused by liquefaction, slope failure, or surface fault ruptures.

If such a geologic site hazard exists, the design of the lateral-force-resisting system of the building must consider this hazard, such as the use of a deep foundation system for an area of liquefaction potential.

4.4 SELECTION AND USE OF CHECKLISTS

The Tier 1 checklists are provided in Chapter 16. Required checklists, as a function of Level of Seismicity and Performance Level, are listed in Table 4-7. Each of the required checklists designated in Table 4-7 shall be completed for a Tier 1 screening. Each of the evaluation statements on the checklists shall be

Table 4-7. Checklists Required for a Tier 1 Screening

Level of Seismicity[b]	Level of Building Performance[c]	Required Checklists[a]: Very Low Seismicity Checklist (Sec 16.1.1)	Basic Configuration Checklist (Sec. 16.1.2)	Life Safety Checklist (Sec. 16.2LS through 16.15LS)	Immediate Occupancy Checklist (Sec. 16.2IO through 16.15IO)	Life Safety Nonstructural Checklist (Sec. 16.17)	Position Retention Nonstructural Checklist (Sec. 16.17)
Very low	LS	X					
Very low	IO		X		X		X
Low	LS		X	X		X	
Low	IO		X		X		X
Moderate	LS		X	X		X	
Moderate	IO		X		X		X
High	LS		X	X		X	
High	IO		X		X		X

[a]An X designates the checklist that must be completed for a Tier 1 screening as a function of the level of seismicity and level of performance.
[b]Defined in Section 2.5.
[c]LS = Life Safety Performance Level, and IO = Immediate Occupancy Performance Level (defined in Section 2.3.3).

marked "Compliant" (C), "Noncompliant" (NC), "Unknown" (U), or "Not Applicable" (N/A). Compliant statements identify issues that are acceptable according to the criteria of this standard, whereas noncompliant or unknown statements identify issues that require further investigation to demonstrate compliance with the applicable Performance Objective. Certain evaluation statements may not apply to the specific building being evaluated.

Quick Checks for Tier 1 shall be performed in accordance with Section 4.5 where necessary to complete an evaluation statement.

The checklist for Very Low Seismicity, located in Section 16.1.1, shall be completed for buildings in Very Low Seismicity being evaluated to the Life Safety Performance Level. For buildings in Very Low Seismicity being evaluated to the Immediate Occupancy Performance Level and buildings in levels of Low, Moderate, or High Seismicity, the appropriate structural and nonstructural checklists shall be completed in accordance with Table 4-7.

The appropriate structural checklists shall be selected based on the common building types defined in Table 3-1. Buildings being evaluated to the Life Safety Performance Level shall use the applicable checklists in Chapter 16 denoted "LS" after the section number. Buildings being evaluated to the Immediate Occupancy Performance Level shall use the applicable checklists in Chapter 16 denoted "IO" after the section number.

A building with a different lateral-force-resisting system in each principal direction shall use two sets of structural checklists, one for each direction. A building with more than one type of lateral-force-resisting system along a single axis of the building being evaluated to the Life Safety Performance Level, including changes in seismic-force-resisting system over the height, may be evaluated using the applicable checklist(s) in Chapter 16 subject to the requirements in Section 3.3.1.2.2.

Two nonstructural checklists also are provided in Chapter 16: Life Safety and Position Retention. Refer to Table 4-7 for the applicability of the nonstructural checklists.

C4.4 SELECTION AND USE OF CHECKLISTS

The evaluation statements provided in the checklists form the core of the Tier 1 screening methodology. These evaluation statements are based on observed earthquake structural damage during actual earthquakes. The checklists do not necessarily identify the response of the structure to ground motion; rather, the design professional obtains a general sense of the structure's deficiencies and potential behavior during an earthquake.

Although the section numbers in parentheses after each evaluation statement correspond to Tier 2 evaluation procedures, they also correspond to commentary in Appendix A regarding the statement's purpose. If additional information on the evaluation statement is required, please refer to the commentary in the Tier 2 procedure and Appendix A for that evaluation statement.

4.5 TIER 1 ANALYSIS

4.5.1 Overview Analyses performed as part of the Tier 1 screening process are limited to Quick Checks. Quick Checks shall be used to calculate the stiffness and strength of certain building components to determine whether the building complies with certain evaluation criteria. Quick Checks shall be performed in accordance with Section 4.5.3 where they are triggered by evaluation statements from the checklists of Chapter 16. Seismic forces for use in the Quick Checks shall be computed in accordance with Section 4.5.2.

4.5.2 Seismic Forces

4.5.2.1 Pseudo Seismic Force The pseudo seismic force, in a given horizontal direction of a building, shall be calculated in accordance with Eqs. (4-1) or (4-2), if applicable.

$$V = CS_aW \tag{4-1}$$

where V = Pseudo seismic force.

C = Modification factor to relate expected maximum inelastic displacements to displacements calculated for linear elastic response; C shall be taken from Table 4-8.

S_a = Response spectral acceleration at the fundamental period of the building in the direction under consideration. The value of S_a shall be calculated in accordance with the procedures in Section 4.5.2.3.

W = Effective seismic weight of the building, including the total dead load and applicable portions of other gravity loads listed below:

1. In areas used for storage, a minimum of 25% of the floor live load shall be applicable. The live load shall be permitted to be reduced for tributary area as approved by the code official. Floor live load in public garages and open parking structures need not be considered.

Table 4-8. Modification Factor, *C*

Building Type[a]	Number of Stories 1	2	3	≥4
Wood (W1, W1a, W2) Moment frame (S1, S3, C1, PC2a)	1.3	1.1	1.0	1.0
Shear wall (S4, S5, C2, C3, PC1a, PC2, RM2, URMa) Braced frame (S2)	1.4	1.2	1.1	1.0
Unreinforced masonry (URM) Flexible diaphragms (S1a, S2a, S5a, C2a, C3a, PC1, RM1)	1.0	1.0	1.0	1.0

[a]Defined in Table 3-1.

2. Where an allowance for partition load is included in the floor load design, the actual partition weight or a minimum weight of 10 lb/ft^2 of floor area, whichever is greater, shall be applied.
3. Total operating weight of permanent equipment.
4. Where the design flat roof snow load calculated in accordance with ASCE 7 exceeds 30 lb/ft^2, the effective snow load shall be taken as 20% of the design snow load. Where the design flat roof snow load is 30 lb/ft^2 or less, the effective snow load shall be permitted to be zero.

Alternatively, for buildings in which the bottom of the foundation is less than 3 ft below exterior grade with a slab or tie beams to connect interior footings and being evaluated for the Life Safety Performance Level, Eq. (4-2) shall be permitted to be used to compute the pseudo seismic force:

$$V = 0.75W \tag{4-2}$$

If Eq. (4-2) is used, an M_s-factor of 1.0 shall be used to compute the component forces and stresses for the Quick Checks of Section 4.5.3.

C4.5.2.1 Pseudo Seismic Force The seismic evaluation procedure of this standard, as well as those in FEMA P-750 (2009c), (BSSC 2009), and ASCE 7 (2010), is based on a widely accepted philosophy that permits nonlinear response of a building where subjected to a ground motion that is representative of the design earthquake. FEMA P-750 (2009c) and ASCE 7 (2010) account for nonlinear seismic response in a linear static analysis procedure by including a response modification factor, R, in calculating a reduced equivalent base shear to produce a rough approximation of the internal forces during a design earthquake. In other words, the base shear is representative of the force that the building is expected to resist, but the building displacements are significantly less than the actual displacements of the building during a design earthquake. Thus, in this R-factor approach, displacements calculated from the reduced base shear need to be increased by another factor (C_d or R) where checking drift or ductility requirements. In summary, this procedure is based on equivalent seismic forces and pseudo displacements.

The linear static analysis procedure in this standard takes a different approach to account for the nonlinear seismic response. Pseudo static seismic forces are applied to the structure to obtain actual displacements during a design earthquake. The pseudo seismic force of Eq. (4-1) represents the force required, in a linear static analysis, to impose the expected deformation of the structure in its yielded state where subjected to the design earthquake motions. The modification factor C in Eq. (4-1) is intended to replace the product of modification factors C_1, C_2, and C_m in Chapter 7. The factor C increases the pseudo seismic force where the period of the structure is low. The effect of the period of the structure is replaced by the number of stories in Table 4-8. Furthermore, the factor C is larger where a higher level of ductility in the building is relied upon. Thus, unreinforced masonry buildings have a lower factor as compared with concrete shear wall or moment-frame structures. In assigning values for coefficient C, representative average values (instead of using most conservative values) for coefficients C_1, C_2, and C_m were considered.

The pseudo seismic force does not represent an actual seismic force that the building must resist in traditional design codes. In summary, this procedure is based on equivalent displacements and pseudo seismic forces. For additional commentary regarding this linear static analysis approach, please refer to the Commentary in Chapter 7.

For short and stiff buildings with low ductility located in levels of High Seismicity, the required building strength in accordance with Eq. (4-1) may exceed the force required to cause sliding at the foundation level. The strength of the structure, however, does not need to exceed the sliding resistance at the foundation–soil interface. It is assumed that this sliding resistance is equal to $0.75W$. Thus, where Eq. (4-2) is applied to these buildings, the required strength of structural components need not exceed $0.75W$.

4.5.2.2 Story Shear Forces The pseudo seismic force calculated in accordance with Section 4.5.2.1 shall be distributed vertically in accordance with Eqs. (4-3a and 4-3b). For buildings six stories or fewer high, the value of k shall be permitted to be taken as 1.0.

$$F_x = \frac{w_x h_x^k}{\sum_{i=1}^{n} w_i h_i^k} V \tag{4-3a}$$

$$V_j = \sum_{x=j}^{n} F_x \tag{4-3b}$$

where V_j = Story shear at story level j;
n = Total number of stories above ground level;
j = Number of story levels under consideration;
W = Total seismic weight, per Section 4.5.2.1;
V = Pseudo seismic force from Eq. (4-1) or (4-2);
w_i = Portion of total building weight W located on or assigned to floor level i;
w_x = Portion of total building weight W located on or assigned to floor level x;
h_i = Height (ft) from the base to floor level i;
h_x = Height (ft) from the base to floor level x; and
k = 1.0 for $T \le 0.5$ s and 2.0 for $T > 2.5$ s; linear interpolation shall be used for intermediate values of k.

For buildings with stiff or rigid diaphragms, the story shear forces shall be distributed to the lateral-force-resisting elements based on their relative rigidities. For buildings with flexible diaphragms (Types S1a, S2a, S5a, C2a, C3a, PC1, RM1, and URM), story shear shall be calculated separately for each line of lateral resistance.

4.5.2.3 Spectral Acceleration Spectral acceleration, S_a, for use in computing the pseudo seismic force shall be computed in accordance with Eq. (4-4).

$$S_a = \frac{S_{X1}}{T} \tag{4-4}$$

but S_a shall not exceed S_{XS}.

where T is the fundamental period of vibration of the building, calculated in accordance with Section 4.5.2.4, and

S_{X1} and S_{XS} are as defined in Section 2.4 for the Seismic Hazard Level specified in Section 4.1.2. Alternatively, a site-specific response spectrum shall be permitted to be developed according to Section 2.4.2 for the Seismic Hazard Level specified in Section 4.1.2.

4.5.2.4 Period The fundamental period of a building, in the direction under consideration, shall be calculated in accordance with Eq. (4-5).

$$T = C_t h_n^{\beta} \tag{4-5}$$

where T = Fundamental period (seconds) in the direction under consideration;
C_t = 0.035 for moment-resisting frame systems of steel (Building Types S1 and S1a);
= 0.018 for moment-resisting frames of reinforced concrete (Building Type C1);
= 0.030 for eccentrically braced steel frames (Building Types S2 and S2a);
= 0.020 for all other framing systems;
h_n = height (ft) above the base to the roof level;
β = 0.80 for moment-resisting frame systems of steel (Building Types S1 and S1a);
= 0.90 for moment-resisting frame systems of reinforced concrete (Building Type C1); and
= 0.75 for all other framing systems.

Alternatively, for steel or reinforced-concrete moment frames of 12 stories or fewer, the fundamental period of the building may be calculated as follows:

$$T = 0.10n \tag{4-6}$$

where n = number of stories above the base.

C4.5.2.4 Period The values of C_t given in this standard are intended to be reasonable lower bound (not mean) values for structures, including the contribution of nonstructural elements. The value of T used in the evaluation should be as close as possible to, but less than, the true period of the structure.

4.5.3 Quick Checks for Strength and Stiffness Quick Checks shall be used to compute the stiffness and strength of building components. Quick Checks are triggered by evaluation statements in the checklists of Chapter 16 and are required to determine the compliance of certain building components. The seismic forces used in the Quick Checks shall be calculated in accordance with Section 4.5.2.

4.5.3.1 Story Drift for Moment Frames Eq. (4-7) shall be used to calculate the drift ratios of regular, multi-story, multi-bay moment frames with columns continuous above and below the story under consideration. The drift ratio is based on the deflection caused by flexural displacement of a representative column, including the effect of end rotation caused by bending of the representative beam.

$$D_r = \left(\frac{k_b + k_c}{k_b k_c}\right)\left(\frac{h}{12E}\right)V_c \tag{4-7}$$

where D_r = Drift ratio: Interstory displacement divided by story height;
$k_b = I/L$ for the representative beam;
$k_c = I/h$ for the representative column;
h = Story height (in.);
I = Moment of inertia (in.^{4});
L = Beam length from center-to-center of adjacent columns (in.);
E = Modulus of elasticity (kip/in.^{2}); and
V_c = Shear in the column (kip).

The column shear forces are calculated using the story shear forces in accordance with Section 4.5.2.2. For reinforced concrete frames, an effective cracked section moment of inertia equal to one-half of gross value shall be used.

Eq. (4-7) also may be used for the first floor of the frame if columns are fixed against rotation at the bottom. However, if columns are pinned at the bottom, the drift ratio shall be multiplied by 2.

For other configurations of frames, the Quick Check need not be performed; however, a Tier 2 evaluation, including calculation of the drift ratio, shall be completed based on principles of structural mechanics.

C4.5.3.1 Story Drift for Moment Frames Eq. (4-7) assumes that all of the columns in the frame have similar stiffness.

4.5.3.2 Shear Stress in Concrete Frame Columns The average shear stress, v_j^{avg}, in the columns of concrete frames shall be computed in accordance with Eq. (4-8).

$$v_j^{avg} = \frac{1}{M_s}\left(\frac{n_c}{n_c - n_f}\right)\left(\frac{V_j}{A_c}\right) \tag{4-8}$$

where n_c = Total number of columns;
n_f = Total number of frames in the direction of loading;
A_c = Summation of the cross-sectional area of all columns in the story under consideration;
V_j = Story shear computed in accordance with Section 4.5.2.2; and
M_s = System modification factor; M_s shall be taken as equal to 2.0 for buildings being evaluated to the Life Safety Performance Level and equal to 1.3 for buildings being evaluated to the Immediate Occupancy Performance Level.

C4.5.3.2 Shear Stress in Concrete Frame Columns Eq. (4-8) assumes that all of the columns in the frame have similar stiffness.

The inclusion of the term $[n_c/(n_c - n_f)]$ in Eq. (4-8) is based on the assumption that the end column carries half the load of a typical interior column. This equation is not theoretically correct for a one-bay frame and yields shear forces that are twice the correct force; however, because of the lack of redundancy in one-bay frames, this level of conservatism is considered appropriate.

4.5.3.3 Shear Stress in Shear Walls The average shear stress in shear walls, v_j^{avg}, shall be calculated in accordance with Eq. (4-9).

$$v_j^{avg} = \frac{1}{M_s}\left(\frac{V_j}{A_w}\right) \tag{4-9}$$

where V_j = Story shear at level j computed in accordance with Section 4.5.2.2.
A_w = Summation of the horizontal cross-sectional area of all shear walls in the direction of loading. Openings shall be taken into consideration where computing A_w. For masonry walls, the net area shall be used. For wood-framed walls, the length shall be used rather than the area.
M_s = System modification factor; M_s shall be taken from Table 4-9.

Table 4-9. M_s Factors for Shear Walls

Wall Type	Level of Performance LS	Level of Performance IO
Reinforced concrete, precast concrete, wood, and reinforced masonry	4.0	2.0
Unreinforced masonry	1.5	1.0

Table 4-10. M_s Factors for Diagonal Braces

Brace Type	d/t[a]	Level of Performance LS	Level of Performance IO
Tube[b]	$<90/(F_{ye})^{1/2}$	6.0	2.5
	$>190/(F_{ye})^{1/2}$	3.0	1.5
Pipe[b]	$<1500/F_{ye}$	6.0	2.5
	$>6000/F_{ye}$	3.0	1.5
Tension-only		3.0	1.5
All others		6.0	2.5

[a]Depth-to-thickness ratio.
[b]Interpolation to be used for tubes and pipes.
$F_{ye} = 1.25F_y$; expected yield stress.

4.5.3.4 Diagonal Bracing The average axial stress in diagonal bracing elements, f_j^{avg}, shall be calculated in accordance with Eq. (4-10).

$$f_j^{avg} = \frac{1}{M_s}\left(\frac{V_j}{sN_{br}}\right)\left(\frac{L_{br}}{A_{br}}\right) \tag{4-10}$$

where L_{br} = Average length of the braces (ft);
N_{br} = Number of braces in tension and compression if the braces are designed for compression; number of diagonal braces in tension if the braces are designed for tension only;
s = Average span length of braced spans (ft);
A_{br} = Average area of a diagonal brace (in.^{2});
V_j = Maximum story shear at each level (kip); and
M_s = System modification factor; M_s shall be taken from Table 4-10.

4.5.3.5 Precast Connections The strength of the connection in precast concrete moment frames shall be greater than the moment in the girder, M_{gj}, calculated in accordance with Eq. (4-11).

$$M_{gj} = \frac{V_j}{M_s}\left(\frac{1}{n_c - n_f}\right)\left(\frac{h}{2}\right) \tag{4-11}$$

Where n_c = Total number of columns;
n_f = Total number of frames in the direction of loading;
V_j = Story shear at the level directly below the connection under consideration;
h = Typical column story height; and
M_s = System modification factor taken as equal to 2.0 for buildings being evaluated to the Life Safety Performance Level and equal to 1.3 for buildings being evaluated to the Immediate Occupancy Performance Level.

C4.5.3.5 Precast Connections The term $[1/(n_c - n_f)]$ in Eq. (4-11) is based on the assumption that the end column carries half the load of a typical interior column.

4.5.3.6 Column Axial Stress Caused by Overturning The axial stress of columns in moment frames at the base subjected to overturning forces, p_{ot}, shall be calculated in accordance with Eq. (4-12).

$$p_{ot} = \frac{1}{M_s}\left(\frac{2}{3}\right)\left(\frac{Vh_n}{Ln_f}\right)\left(\frac{1}{A_{col}}\right) \tag{4-12}$$

where n_f = Total number of frames in the direction of loading;
V = Pseudo seismic force;
h_n = Height (ft) above the base to the roof level;
L = Total length of the frame (ft);
M_s = System modification factor taken as equal to 2.0 for buildings being evaluated to the Life Safety Performance Level and equal to 1.3 for buildings being evaluated to the Immediate Occupancy Performance Level; and
A_{col} = Area of the end column of the frame.

C4.5.3.6 Column Axial Stress Caused by Overturning The 2/3 factor in Eq. (4-12) assumes a triangular force distribution with the resultant applied at 2/3 the height of the building.

4.5.3.7 Flexible Diaphragm Connection Forces The horizontal seismic forces associated with the connection of a flexible diaphragm to either concrete or masonry walls, T_c, shall be calculated in accordance with Eq. (4-13).

$$T_c = \psi S_{XS} w_p A_p \tag{4-13}$$

Where w_p = unit weight of the wall;
A_p = area of wall tributary to the connection;
ψ = 1.2 for Life Safety Performance Level and 1.8 for Immediate Occupancy Performance Level; and
S_{XS} = value specified in Section 4.5.2.3.

4.5.3.8 Prestressed Elements The average prestress in prestressed or post-tensioned elements, f_p, shall be calculated in accordance with Eq. (4-14).

$$f_p = \frac{f_{pe} n_p}{A_p} \tag{4-14}$$

where f_{pe} = Effective force of a prestressed strand;
n_p = Number of prestressed strands; and
A_p = Gross area of prestressed concrete elements.

C4.5.3.8 Prestressed Elements The average prestress is simply calculated as the effective force of a prestressed strand times the number of strands divided by the gross concrete area. In many cases, half-inch strands are used, which correspond to an effective force of 25 kip per strand.

4.5.3.9 Flexural Stress in Columns and Beams of Steel Moment Frames The average flexural stress in the columns and beams of steel frames at each level shall be computed in accordance with Eq. (4-15).

$$f_j^{avg} = V_j \frac{1}{M_s}\left(\frac{n_c}{n_c - n_f}\right)\left(\frac{h}{2}\right)\frac{1}{Z} \tag{4-15}$$

where n_c = Total number of frame columns at the level, j, under consideration.
n_f = Total number of frames in the direction of loading at the level, j, under consideration.
V_j = Story shear computed in accordance with Section 4.5.2.2.
h = Story height (in.).
Z = For columns, the sum of the plastic section moduli of all the frame columns at the level under consideration. For beams, it is the sum of the plastic section moduli of all the frame beams with moment-resisting connections. If a beam has moment-resisting connec-

tions at both ends, then the contribution of that beam to the sum is twice the plastic section modulus of that beam (in^3).

M_s = System modification factor; M_s shall be taken as equal to 8.0 for buildings being evaluated to the Life Safety Performance Level and equal to 3.0 for buildings being evaluated to the Immediate Occupancy Performance Level for columns and beams satisfying the checklist items for compactness and column axial stress. If the columns or beams do not satisfy the checklist statements for compactness and column axial stress for the Immediate Occupancy Performance Level, then this item must be marked noncompliant.

C4.5.3.9 Flexural Stress in Columns and Beams of Steel Moment Frames Eq. (4-15) assumes that all of the columns in the frame have similar stiffness.

The inclusion of the term $[n_c/(n_c - n_f)]$ in Eq. (4-15) is based on the assumption that the end column carries half the load of a typical interior column. This equation is not theoretically correct for a one-bay frame and yields forces that are twice the correct force. However, because of the lack of redundancy in the one-bay frame, this level of conservatism is considered appropriate. The equation may also be conservative when checking the top level of a frame.

This page intentionally left blank

CHAPTER 5
TIER 2 DEFICIENCY-BASED EVALUATION AND RETROFIT

5.1 SCOPE

This chapter contains the requirements for performing seismic evaluation and retrofit using the Tier 2 deficiency-based procedures. General requirements are specified in Section 5.2. Evaluation requirements and retrofit requirements are specified in Section 5.3 and 5.8, respectively. The Tier 2 process is shown in Fig. 5-1.

The Tier 2 deficiency-based evaluation requires additional analysis and evaluation of all the potential deficiencies identified in the Tier 1 screening (denoted by either "Noncompliant" or "Unknown" responses in the Tier 1 checklists). The additional analysis and evaluation of each potential deficiency shall be sufficient to either confirm the deficiency or demonstrate the adequacy of the structure as it relates to the potential deficiency. The evaluation shall, at a minimum, use the procedures specified in Sections 5.4 to 5.7.

The scope of the Tier 2 deficiency-based evaluation need not expand beyond the evaluation of the potential deficiencies identified in the Tier 1 screening.

The Tier 2 deficiency-based retrofit requires retrofit of the building such that the deficiencies identified in a Tier 1 screening or a Tier 2 evaluation are mitigated to achieve compliance with the selected Performance Objective(s). The scope of the Tier 2 deficiency-based retrofit need not expand beyond that necessary to modify the building to comply with a Tier 1 screening or a Tier 2 evaluation.

Tier 2 evaluation and retrofit of nonstructural components shall be performed in accordance with the provisions of Chapter 13.

C5.1 SCOPE

Tier 2 deficiency-based evaluation is new nomenclature for what ASCE 31-03 refers to as Deficiency-Only Tier 2 Evaluation. Tier 2 deficiency-based evaluation limits the scope of the evaluation to examining all potential deficiencies associated with Tier 1 noncompliant statements. The deficiency-based retrofit is new nomenclature for what ASCE 41-06 refers to as the Simplified Rehabilitation Method.

Because of the nature of mitigating seismic hazards of nonstructural components, the individual components should be evaluated and/or retrofitted in a systematic manner in accordance with the provisions of Chapter 13. Therefore, whereas ASCE 31-03 had Tier 2 provisions for the evaluation of nonstructural components, these provisions have been replaced by the nonstructural provisions of ASCE 41-06 as updated in this standard, because there is no practical difference between the Tier 2 and Tier 3 procedures for nonstructural components.

5.2 GENERAL REQUIREMENTS

A Tier 1 screening (Chapter 4) shall be completed before performing a Tier 2 deficiency-based evaluation or retrofit. Use of deficiency-based procedures is subject to the limitations of Section 3.3.

C5.2 GENERAL REQUIREMENTS

The deficiency-based methods (for evaluation and retrofit) only apply to buildings that sufficiently fit into one of the common building types in Table 3-1 and conform to the limitations of Section 3.3 and Table 3-2.

5.2.1 Performance Level and Seismic Hazard Level The Performance Level and Seismic Hazard Level for evaluation or retrofit shall be the same as for the Tier 1 screening as specified in Sections 4.1.1 and 4.1.2.

If the Tier 2 deficiency-based evaluation demonstrates the adequacy of the structure with respect to all of the "Noncompliant" or "Unknown" statements in the Tier 1 screening, then the building complies with this standard for the corresponding Performance Objective. If the building is retrofitted in accordance with the deficiency-based retrofit procedure, then the retrofitted building complies with this standard for the corresponding Performance Objectives.

C5.2.1 Performance Level and Seismic Hazard Level Deficiency-based procedures are intended for further evaluation or mitigation of the deficiencies identified in a Tier 1 screening, and therefore it is only appropriate to use the same Performance Level and Seismic Hazard Level for Tier 2 as is addressed in the Tier 1 screening procedure. These methods reflect a level of analysis and design that is appropriate for relatively small buildings with well understood, straightforward seismic-force-resisting systems that are consistent with the Tier 1 Performance Levels.

For those buildings that satisfy the limitations of Section 3.3 and Table 3-2, and for which Life Safety Performance Level or Immediate Occupancy Performance Level can be achieved by passing a Tier 1 evaluation, it is logical that such buildings can achieve the same Performance Levels by either (1) demonstrating by further evaluation that the building is adequate for all potential deficiencies identified by noncompliant statements or (2) modifying the building in an appropriate way such that it complies with a Tier 1 screening and Tier 2 evaluation.

5.2.2 As-Built Information In addition to the information required for a Tier 1 screening in Chapter 4, sufficient information shall be collected for a Tier 2 evaluation or retrofit to

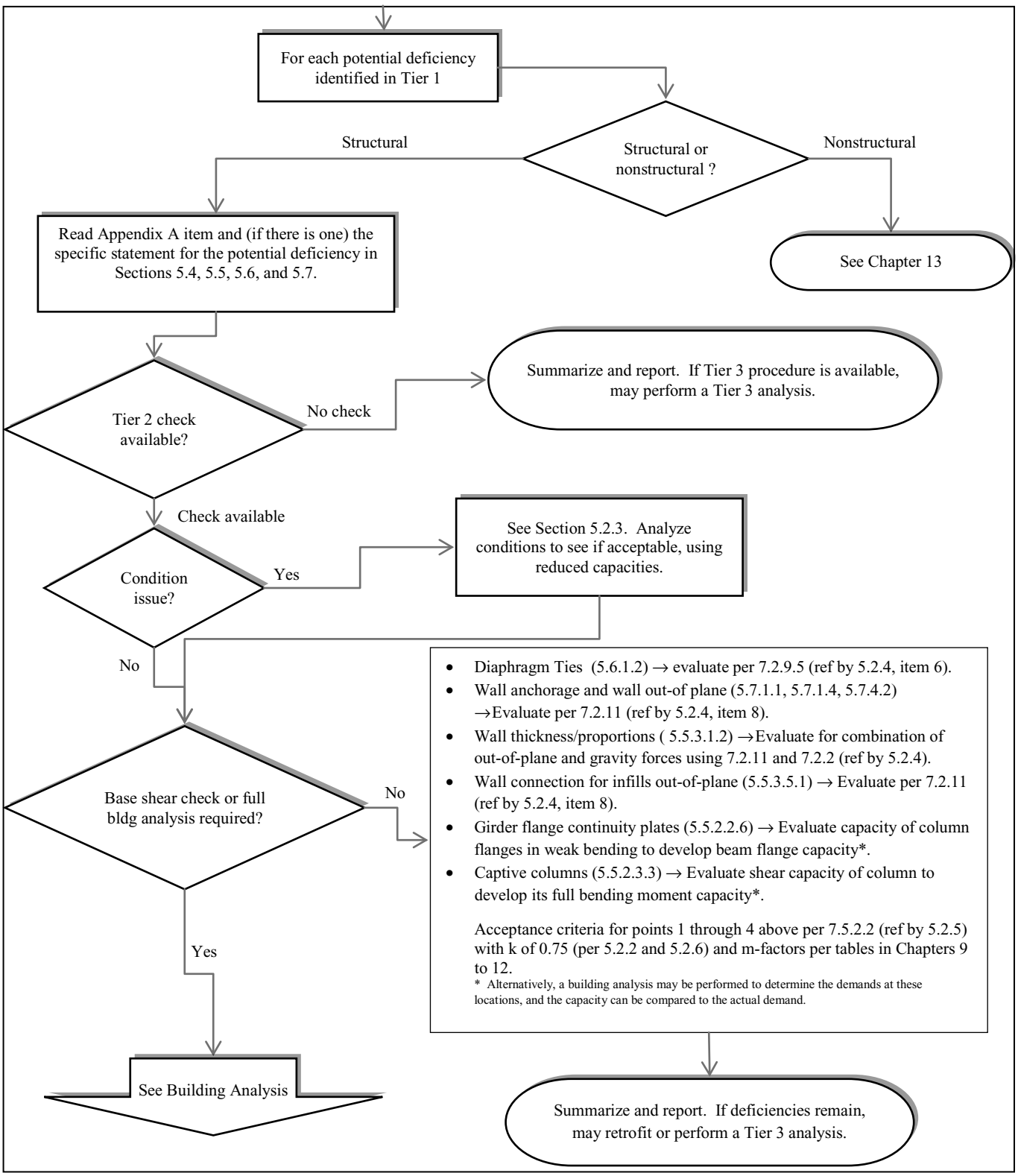

FIG. 5-1. Tier 2 Evaluation Process

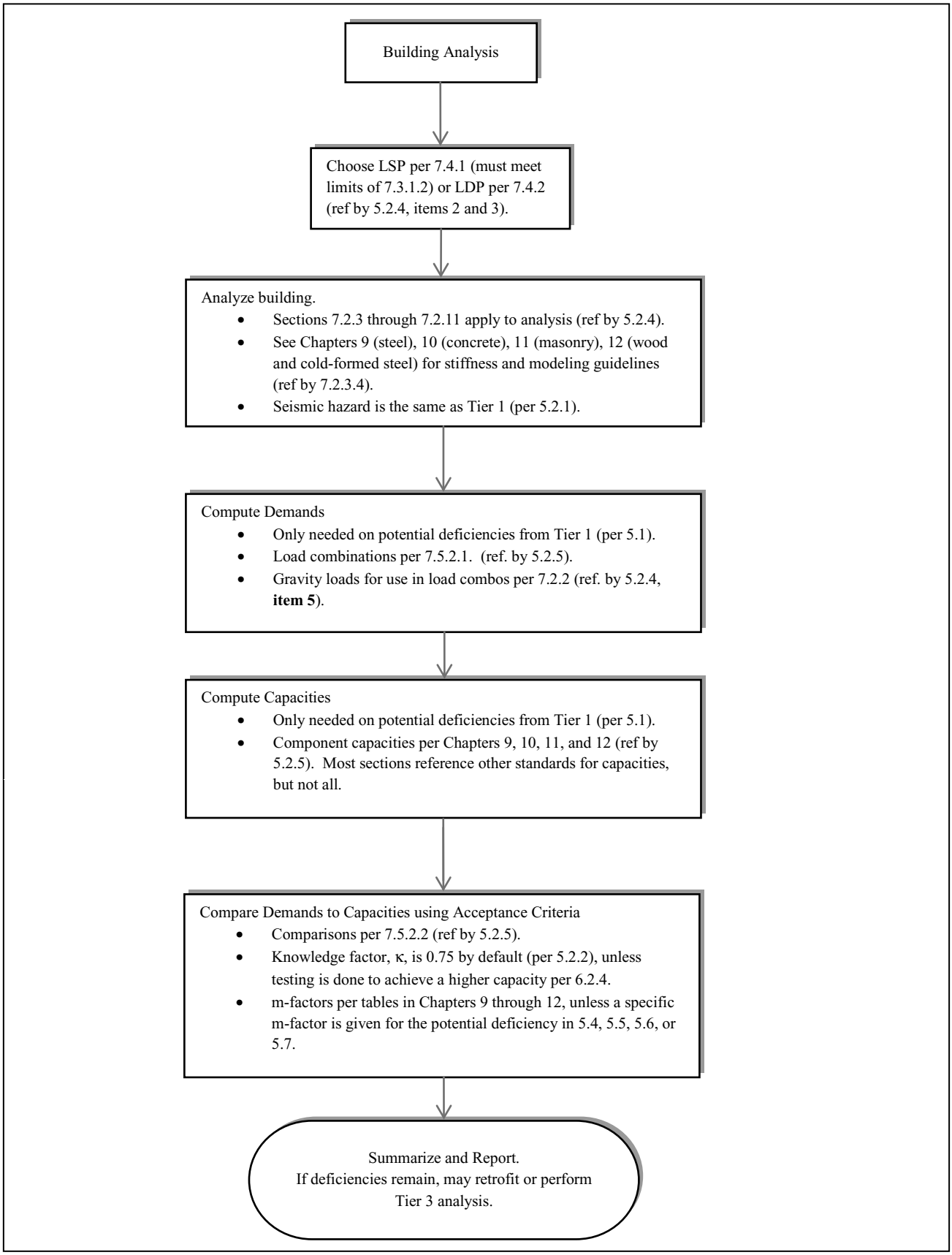

FIG. 5-1. *(Continued)*

complete the required procedures in this chapter. Destructive examination shall be conducted as required to complete the procedures for buildings being evaluated to the Immediate Occupancy Performance Level. Nondestructive examination of connections and conditions associated with all potential deficiencies shall be performed for all Tier 2 evaluations and retrofits.

For the purpose of this chapter, it is permitted to use the default material properties in Chapters 8 through 12 or to use material properties provided in available design drawings.

C5.2.2 As-Built Information As-built information beyond that required for Tier 1 may be required to perform Tier 2 evaluations and retrofits, including destructive examination and testing. The design professional must ensure sufficient understanding of actual conditions to properly evaluate if buildings are adequate with respect to all of the potential deficiencies found in the Tier 1 screening procedure. Default material property values from the material chapters may be used, or the design professional can assume the values to be as indicated in available design drawings; however, capacities of elements must include the knowledge factor, as specified in Section 6.2.4. Material testing is required to achieve a knowledge factor of 1.0.

5.2.3 Condition Assessment Where the Tier 2 procedures are used to evaluate deterioration or damage identified in the Tier 1 screening phase or during a subsequent on-site investigation, the extent and the consequence of this deterioration or damage to the seismic-force-resisting system shall be determined. The adequacy of the damaged seismic-force-resisting system shall be evaluated considering the extent of the damage and the effect on the capacity of each damaged element. The effects of the condition of the materials on the seismic performance shall be permitted to be based on the judgment of the evaluator. The findings and documentation of this investigation shall be subject to the approval of the authority having jurisdiction.

C5.2.3 Condition Assessment The design professional should identify the cause and the extent of the damage. Determining the cause is useful to ensure that the condition is well understood and the extent of the damage defined. If the damage does not reduce system, element, or connection capacity, an explicit evaluation of adequacy is not required. If the capacity is reduced, the reduced capacity must be evaluated for demands. The design professional may choose to conservatively evaluate the damaged component as a force controlled element or proceed to a Tier 3 full-building analysis. The applicable building code may have design provisions for repair of damage to the seismic-force-resisting system, including acceptance criteria, that are not covered in these provisions.

5.2.4 Tier 2 Analysis Methods Where the use of the Tier 2 procedures requires analysis of the structure or a component of the structure, the analysis shall conform to the following requirements:

1. General analysis requirements shall be in accordance with Section 7.2.
2. Where required by Sections 5.4 through 5.7, the analysis of the seismic-force-resisting system shall be based on the linear static procedure (LSP) of Section 7.4.1 or the linear dynamic procedure (LDP) of Section 7.4.2.
3. The limitations on the use of linear procedures in Section 7.3.1.1 need not apply to the Tier 2 procedure, but the use of the LSP shall be limited in accordance with Section 7.3.1.2.
4. Mathematical modeling and analysis requirements shall be in accordance with Sections 7.2.3 through 7.2.8.
5. Load combinations shall be in accordance with Section 7.2.2.
6. Where required by Sections 5.4 through 5.7, diaphragms, chords, collectors, and ties shall be analyzed in accordance with Section 7.2.9.
7. Where required by Sections 5.4 through 5.7, continuity of structural elements shall be analyzed in accordance with Section 7.2.10.
8. Where required by Sections 5.4 through 5.7, walls and wall anchorage shall be analyzed in accordance with Section 7.2.11.

The extent of modeling and analysis of the structure shall be as required to determine the forces or actions on the structural system or on each specific structural component addressed by the Tier 2 analysis.

C5.2.4 Tier 2 Analysis Methods Tier 2 analysis procedures of ASCE 31-03 are essentially those of the LSP and LDP of ASCE 41-06. Therefore, for this standard, which combines ASCE 31 and ASCE 41, the Tier 2 analysis requirements point to those for the LSP and LDP procedures for Tier 3. Though the Tier 2 deficiency-based evaluation limits the scope of the evaluation to specific systems, elements, connections, and details associated with a potential deficiency identified in Tier 1, the design professional often needs to perform a full analysis of the entire building's structure to obtain the necessary actions (e.g., deformations or forces) to evaluate the structure's adequacy for the potential deficiency. The general requirements of Section 7.2 provide procedures for demands on diaphragm elements and on walls from out-of-plane response. The Tier 2 analysis requirements are not meant to preclude the design professional from demonstrating adequacy of the structure for the potential deficiency by using upper bound demands, such as using a limit state analysis or force controlled methods, in lieu of complete analysis. Such limit state analyses may require approval of the authority having jurisdiction.

5.2.5 Tier 2 Acceptance Criteria The acceptance criteria for Tier 2 procedures shall be in accordance with Section 7.5.2.2. Design actions shall be calculated in accordance with Section 7.5.2.1. Component capacities shall be in accordance with Section 7.5.2.2 and Chapters 8 through 12.

C5.2.5 Tier 2 Acceptance Criteria Tier 2 acceptance criteria are the same as for Tier 3 procedures and are prescribed in Chapter 7, which references material-specific requirements in Chapters 8 through 12.

5.2.6 Knowledge Factor The knowledge factor, κ, shall be 0.75 unless data collection complies with the requirements for a knowledge factor of 1.0 in accordance with Section 6.2.4.

C5.2.6 Knowledge Factor Because of uncertainties in the material properties in existing buildings, the potential exists for there to be significant variation from what is specified in the construction documents or from the default material properties. To account for this potential variability, material testing is required or the values are reduced by the knowledge factor, κ. See Section C6.2.4.1 for additional discussion.

5.3 TIER 2 DEFICIENCY-BASED EVALUATION REQUIREMENTS

The Tier 2 evaluation procedure shall consist of an evaluation in accordance with Sections 5.4 through 5.7 for the structural systems or components identified as "Noncompliant" or "Unknown" based on the Tier 1 screening checklists. The analy-

sis shall be as required to determine the demands and capacities of all structural systems, components, and connections associated with the potential deficiency.

C5.3 TIER 2 DEFICIENCY-BASED EVALUATION REQUIREMENTS

The design professional is to determine through further analysis and evaluation if a potential deficiency identified in Tier 1 screening is indeed a deficiency or if all structural systems, elements, connections, and details associated with the potential deficiency are adequate. Chapter 4 of ASCE 31-03 included each evaluation statement followed by Tier 2 evaluation procedures and Commentary, most of which was Commentary on the potential deficiency associated with the statement. Whereas in ASCE 31-03 the Tier 2 procedures were organized by Tier 1 statements, in this standard, the Tier 2 procedures are organized in a manner that allows elimination of repetitive Tier 2 requirements and clarification of the scope of Tier 2 deficiency-based evaluations. Sections 5.4 to 5.8 provide consolidated Tier 2 evaluation procedures and Commentary on the Tier 2 procedures. Commentary from ASCE 31-03 on the statement's potential deficiency is now in Appendix A, organized by statements, along with commentary on deficiency-based rehabilitation strategies for certain statements.

Where the provisions in Sections 5.4 through 5.7 indicate that there is no Tier 2 procedure for a particular Tier 1 checklist statement, the design professional may either terminate the evaluation or consider a retrofit measure for that deficiency. The items without Tier 2 procedures generally involve lack of structural load path or interconnection such that there is no system to analyze or evaluate.

5.4 PROCEDURES FOR BASIC CONFIGURATION OF BUILDING SYSTEMS

This section provides Tier 2 deficiency-based evaluation procedures that apply to the Basic Configuration Checklists in Section 16.1.2.

5.4.1 General

5.4.1.1 Load Path No Tier 2 deficiency-based evaluation procedure is available for buildings without a compliant load path.

C5.4.1.1 Load Path A complete load path is a basic requirement for all buildings evaluated using this standard. If the design professional does not identify a complete load path, a Tier 2 deficiency-based evaluation is not sufficient. The absence of a complete, well-defined load path does not mean that there is no seismic force load path. Alternate load paths through the secondary elements may be present. In that case, the building requires a Tier 3 systematic evaluation to assess the adequacy of any alternative load paths. The design professional should use judgment to decide if the alternate load path is so egregiously deficient that the Tier 3 evaluation would provide little added value and the evaluation should be concluded.

5.4.1.2 Adjacent Buildings An analysis should be performed in accordance with Section 5.2.4 to determine the drifts in the structure being evaluated. The drifts in the adjacent structures should be estimated using available information about the adjacent structure and the analysis procedures of this standard. Alternatively, it shall be permitted to assume that the adjacent building drift is 3% of the height of the diaphragm level under consideration. The square root of the sum of the squares combination of the drifts shall be less than the total separation at each diaphragm level. Buildings that have similar structural systems, have matching diaphragms, and do not differ in height by more than 50% of the height of the shorter building need not comply with this statement for the Life Safety Performance Level provided that impact between the two structures does not damage the facade or cladding of the building in such a manner as to create a Life Safety falling hazard.

C5.4.1.2 Adjacent Buildings The design professional needs to analyze the structure to determine story drifts of the building, or alternatively, to develop a conservative upper bound for the drift magnitude. Similarly, the design professional has to develop an estimate of the drift for the adjacent building. The standard recognizes that available information for the adjacent building may be limited and an estimate may need to be developed using approximate methods appropriate for the information available. The estimate should be conservative if not based on analysis conforming to Chapter 7 requirements. Observations from past earthquakes support the notion that if buildings have similar structural systems, and thus similar stiffness, and the floors align, then the prescribed separation is not necessary to achieve Life Safety Performance Level. However, the response of a stiff building adjacent to a flexible building may be significantly amplified by pounding from the flexible building and vice versa where there exists insufficient separation, even with matching floor levels and heights.

5.4.1.3 Mezzanines The load path of the mezzanine to the main seismic-force-resisting system shall be identified. The adequacy of the load path shall be evaluated in accordance with Section 5.2.4. The adequacy of the elements of the main structure connected to the mezzanine shall be evaluated considering the magnitude and location of the mezzanine forces imparted on the main structure.

C5.4.1.3 Mezzanines The design professional needs to perform sufficient analysis and evaluation to determine if there is an adequate load path to transfer forces associated with the mass of the mezzanine to the main seismic-force-resisting system. The evaluation should include connections to the elements of the main structure and their adequacy to accommodate the mezzanine forces. Particular attention should be paid to transverse forces on columns, out-of-plane forces on walls, and weak axis bending of unbraced beams.

5.4.2 Building Configuration

5.4.2.1 Weak Story Irregularity An analysis of the entire structure shall be performed in accordance with Section 5.2.4. The demand–capacity ratio (DCR) shall be evaluated in accordance with Section 7.3.1.1 for all elements of the seismic-force-resisting system in the noncompliant stories. The building is deemed compliant with this statement if the maximum DCR is less than 2 in the stories found noncompliant in the Tier 1 screening procedure.

C5.4.2.1 Weak Story Irregularity An analysis of the entire structure is required to determine the seismic demands at locations of strength discontinuities. Calculations of DCR for elements are used to (1) determine if linear procedures are applicable given the irregularity and (2) determine if the story strength is greater than one-half the total pseudo seismic force at that story and thus that a side-sway mechanism is most likely not the story mechanism because of inherent material overstrength.

5.4.2.2 Soft Story Irregularity An analysis shall be performed in accordance with Section 5.2.4 using the linear dynamic procedure. The adequacy of all elements of the seismic-force-

resisting system shall be evaluated in the noncompliant stories in accordance with Section 5.2.5.

C5.4.2.2 Soft Story Irregularity A dynamic analysis of the entire structure is required to determine the seismic demands at locations of stiffness discontinuities. The elements of the seismic-force-resisting system are required to meet the Tier 2 acceptance criteria. The evaluation is only required at noncompliant stories.

5.4.2.3 Vertical Irregularities An analysis shall be performed in accordance with Section 5.2.4 and the DCRs shall be determined in accordance with Section 7.3.1.1 for all elements of the seismic-force-resisting system in the noncompliant stories. Then the adequacy of the elements and connections below the vertical discontinuities shall be evaluated in accordance with Section 5.2.5 as force-controlled elements. The adequacy of struts and diaphragms to transfer loads to adjacent seismic-force-resisting elements as force-controlled elements shall be evaluated.

C5.4.2.3 Vertical Irregularities Calculation of the DCR for elements is used to determine if linear procedures are applicable given the irregularity. Systems, elements, and connections that transfer seismic forces at the discontinuity are to be considered force-controlled elements to ensure that yielding does not occur in these elements.

5.4.2.4 Geometric Irregularity An analysis shall be performed in accordance with Section 5.2.4 using the linear dynamic procedure. The adequacy of the seismic-force-resisting elements shall be evaluated in accordance with Section 5.2.5.

C5.4.2.4 Geometric Irregularity Geometric irregularities affect the dynamic response of the structure and may lead to unexpected higher mode effects or concentrations of demand. A dynamic analysis is required to calculate the distribution of seismic forces more accurately.

5.4.2.5 Mass Irregularity An analysis shall be performed in accordance with Section 5.2.4 using the linear dynamic procedure. The adequacy of the seismic-force-resisting elements shall be evaluated in accordance with Section 5.2.5.

C5.4.2.5 Mass Irregularity Mass irregularities affect the dynamic response of the structure and may lead to unexpected higher mode effects or concentrations of demand. A dynamic analysis is required to calculate the distribution of seismic forces more accurately.

5.4.2.6 Torsion Irregularity An analysis of the entire structure shall be performed in accordance with Section 5.2.4, including the effects of horizontal torsion. The adequacy of the seismic-force-resisting system, including the effects of horizontal torsion, shall be evaluated in accordance with Section 5.2.5. In addition, all vertical-load-carrying elements shall be adequate for their gravity loads combined with forces associated with story displacements that include torsion and P-delta effects.

C5.4.2.6 Torsion Irregularity A three-dimensional LDP analysis of the entire structure is required to capture the additional demands from torsion response.

5.4.3 Geologic Site Hazards and Foundation Components

5.4.3.1 Geologic Site Hazards No Tier 2 evaluation procedure is available for buildings subjected to liquefaction, slope failure, or surface fault rupture. The structure shall be evaluated for the effects of these hazards using the Tier 3 procedures in Chapters 6 and 8.

C5.4.3.1 Geologic Site Hazards The potential for liquefaction, slope failure, or surface fault rupture at a site requires a level of evaluation beyond the Tier 2 procedures. The provisions in Chapter 8 are more appropriate for the analysis of these conditions.

5.4.3.2 Foundation Performance The magnitude of differential movement in the foundation shall be evaluated, and an analysis of the building in accordance with Section 5.2.4 shall be performed. The adequacy of the structure shall be evaluated in accordance with Section 5.2.5 for all gravity loads and seismic forces in combination with the forces induced by the potential differential movement of the foundation.

5.4.3.3 Overturning An analysis shall be performed in accordance with Section 5.2.4. The adequacy of the foundation, including all gravity and seismic overturning forces, shall be evaluated in accordance with Section 5.2.5.

C5.4.3.3 Overturning For shallow foundations, the shear and moment capacity of the foundation elements should be evaluated for adequacy to resist calculated seismic forces. The vertical bearing pressure of the soil under seismic loading conditions caused by the total gravity and overturning loads should be calculated. For deep foundations, the vertical capacity of the pile or pier under seismic loads should be determined. The foundation capacity, determined in accordance with Chapter 8, shall then be compared with the demands caused by gravity loads plus overturning.

5.4.3.4 Ties between Foundation Elements The magnitude of differential movement in the foundation shall be evaluated, and an analysis of the building in accordance with Section 5.2.4 shall be performed. The adequacy of the structure shall be evaluated in accordance with Section 5.2.5 for all gravity and seismic forces in combination with the forces induced by the potential differential movement of the foundation.

5.5 PROCEDURES FOR SEISMIC-FORCE-RESISTING SYSTEMS

This section provides Tier 2 deficiency-based evaluation procedures that apply to all noncompliant seismic-force-resisting systems checklist evaluation statements.

5.5.1 General

5.5.1.1 Redundancy An analysis of the structure shall be performed in accordance with Section 5.2.4, and the adequacy of all elements and connections of the seismic-force-resisting system shall be evaluated for all noncompliant stories, in accordance with Section 5.2.5.

C5.5.1.1 Redundancy Tier 1 Quick Checks are not sufficient if there is a lack of redundancy. When stories do not meet the redundancy requirements, the design professional must perform analysis to determine demands and evaluate the adequacy of the systems, elements, and connections of the seismic-force-resisting system.

5.5.2 Procedures for Moment Frames

5.5.2.1 General Procedures for Moment Frames

5.5.2.1.1 Interfering Walls Where concrete and masonry walls are not isolated from moment-frame elements, an analysis shall be performed in accordance with Section 5.2.4 to compute the demands imparted by the structure to the interfering walls and the demands induced on the frame elements. The adequacy of the interfering walls and the frame to resist the induced forces shall be evaluated in accordance with Section 5.2.5.

C5.5.2.1.1 Interfering Walls A moment-frame system that has interfering walls requires evaluation as an infill frame. Interfering walls should be checked for forces induced by the frame, particularly where damage to these walls can lead to falling hazards near means of egress. The frames should be checked for forces induced by contact with the walls, particularly if the walls are not full height or do not completely fill the bay.

5.5.2.1.2 Drift Check An analysis shall be performed in accordance with Section 5.2.4, and the adequacy of the beams, slabs, and columns, including P-delta effects, and their associated connections shall be evaluated in accordance with Section 5.2.5.

5.5.2.1.3 Axial Stress Check An analysis in accordance with Section 5.2.4 shall be performed. The gravity and overturning demands for noncompliant columns shall be calculated, and the adequacy of the columns to resist overturning forces shall be evaluated in accordance with Section 5.2.5.

5.5.2.1.4 Shear Stress Check An analysis in accordance with Section 5.2.4 shall be performed. The adequacy of the frame elements shall be evaluated in accordance with Section 5.2.5.

5.5.2.1.5 Strong Column–Weak Beam An analysis shall be performed in accordance with Section 5.2.4, and the ability of the columns to resist calculated demands shall be evaluated using Section 5.2.5 with a modification factor, *m*-factor, equal to 2.5 for steel moment frames and 2.0 for concrete moment frames. Alternatively, the story strength shall be evaluated for the capacity to resist one-half of the total pseudo seismic force.

C5.5.2.1.5 Strong Column–Weak Beam If it can be demonstrated that noncompliant columns are strong enough to resist calculated demands with sufficient overstrength, acceptable behavior can be expected. Reduced *m*-factors are used to check the columns at near elastic levels.

The alternative procedure checks for the formation of a story mechanism. The story strength is the sum of the shear capacities of all the columns as limited by the controlling action. If the columns are shear critical, a shear mechanism forms at the shear capacity of the columns. If the columns are controlled by flexure, a flexural mechanism forms at a shear corresponding to the flexural capacity.

Should additional study be required, a Tier 3 evaluation would include a nonlinear pushover analysis. The formation of a story mechanism would be acceptable, provided that the element demands satisfy the required acceptance criteria at the required target displacement.

5.5.2.2 Procedures for Steel Moment Frames

5.5.2.2.1 Moment-Resisting Connections The demands on the noncompliant connections shall be computed in accordance with Section 5.2.4, and the connections shall be evaluated in accordance with Section 5.2.5.

5.5.2.2.2 Panel Zones The demands in noncompliant joints shall be calculated in accordance with Section 5.2.4, and the adequacy of the panel zones for web shear shall be evaluated in accordance with Section 5.2.5.

C5.5.2.2.2 Panel Zones Where panel zones cannot develop the strength of the beams, compliance can be demonstrated by checking the panel zones for actual shear demands.

5.5.2.2.3 Column Splices The gravity and seismic demands shall be calculated in accordance with Section 5.2.4, and the adequacy of the splice connections shall be evaluated in accordance with Section 5.2.5.

5.5.2.2.4 Compact Members An analysis shall be performed in accordance with Section 5.2.4, and the adequacy of all noncompliant beams and columns that are part of a moment frame shall be evaluated in accordance with Section 5.2.5.

C5.5.2.2.4 Compact Members The adequacy of the frame elements should be demonstrated using the appropriate *m*-factors in consideration of reduced ductility for noncompact sections.

5.5.2.2.5 Beam Penetrations The shear and flexural demands on noncompliant beams shall be calculated in accordance with Section 5.2.4. The adequacy of the beams considering the strength around the penetrations shall be evaluated in accordance with Section 5.2.5.

5.5.2.2.6 Girder Flange Continuity Plates The adequacy of the column flange to transfer girder flange forces to the panel zone without continuity plates shall be evaluated in accordance with Section 5.2.5.

5.5.2.2.7 Out-of-Plane Bracing at Beam–Column Joints An analysis shall be performed in accordance with Section 5.2.4, and the adequacy of the columns at the noncompliant joint to resist buckling between points of support for all gravity and seismic actions concurrent with a horizontal out-of-plane force equal to 6% of the critical column flange compression force applied at the noncompliant joint shall be evaluated in accordance with Section 5.2.5.

5.5.2.2.8 Bottom Flange Bracing An analysis shall be performed in accordance with Section 5.2.4. The adequacy of the beams shall be evaluated considering the potential for lateral torsional buckling of the bottom flange between points of lateral support in accordance with Section 5.2.5.

5.5.2.3 Procedures for Concrete Moment Frames

5.5.2.3.1 Flat Slab Frames An analysis shall be performed in accordance with Section 5.2.4. The adequacy of the slab–column system for resisting seismic forces and punching shear shall be evaluated in accordance with Section 5.2.5.

5.5.2.3.2 Prestressed Frame Elements An analysis shall be performed in accordance with Section 5.2.4. The adequacy of the concrete frame, including prestressed elements, shall be evaluated in accordance with Section 5.2.5.

5.5.2.3.3 Captive Column Conditions The adequacy of the columns shall be evaluated for the shear force required to develop the moment capacity at the top and the bottom of the clear height of the column. Alternatively, an analysis shall be performed in accordance with Section 5.2.4, and the columns shall be evaluated as force-controlled elements in accordance with Section 5.2.5.

5.5.2.3.4 No Shear Failures The shear demands shall be calculated for noncompliant members in accordance with Section 5.2.4, and the adequacy of the members for shear shall be evaluated in accordance with Section 5.2.5.

C5.5.2.3.4 No Shear Failures Members that cannot develop the flexural capacity in shear should be checked for adequacy against calculated shear demands. Note that, for columns, the shear capacity is affected by the axial loads and should be based on the most critical combination of axial load and shear.

5.5.2.3.5 Continuous Beam Bars The flexural demands shall be calculated at the ends and the middle of noncompliant beams in accordance with Section 5.2.4, and the adequacy of the beams using an *m*-factor equal to 1.0 shall be evaluated in accordance with Section 5.2.5.

C5.5.2.3.5 Continuous Beam Bars Because noncompliant beams are vulnerable to collapse, the beams are required to resist demands at an elastic level. Continuous slab reinforcement adjacent to the beam may be considered as continuous top reinforcement.

5.5.2.3.6 Column and Beam Bar Splices The flexural demands at noncompliant beam and column splices shall be calculated in accordance with Section 5.2.4, and the adequacy of the beams and columns shall be evaluated in accordance with Section 5.2.5.

C5.5.2.3.6 Column and Beam Bar Splices Beams and columns with noncompliant lap splices are checked using smaller *m*-factors to account for this potential lack of ductility. If the members have sufficient capacity, the demands are less likely to cause degradation and loss of bond between the concrete and the reinforcing steel.

5.5.2.3.7 Column-Tie Spacing and Beam Stirrup Spacing The force demands in noncompliant beams and columns shall be calculated in accordance with Section 5.2.4, and the adequacy of the elements shall be evaluated in accordance with Section 5.2.5.

C5.5.2.3.7 Column-Tie Spacing and Beam Stirrup Spacing Elements with noncompliant confinement are checked using smaller *m*-factors to account for this potential lack of ductility.

5.5.2.3.8 Joint Reinforcing The joint shear demands shall be calculated in accordance with Section 5.2.4, and the adequacy of the joint to develop the adjoining members' forces shall be evaluated in accordance with Section 5.2.5.

5.5.2.3.9 Joint Eccentricity The joint shear demands, including additional shear stresses from joint torsion, shall be calculated in accordance with Section 5.2.4, and the adequacy of the beam–column joints shall be evaluated in accordance with Section 5.2.5.

C5.5.2.3.9 Joint Eccentricity The demand associated with the smallest column plan dimension should be calculated for the column at each joint under consideration.

5.5.2.3.10 Stirrup and Tie Hooks The shear and axial demands in noncompliant members shall be calculated in accordance with Section 5.2.4, and the adequacy of the beams and columns shall be evaluated in accordance with Section 5.2.5.

C5.5.2.3.10 Stirrup and Tie Hooks Elements with noncompliant confinement are checked using smaller *m*-factors to account for potential lack of ductility for Life Safety and Immediate Occupancy Performance Levels.

5.5.2.4 Procedures for Precast Concrete Moment Frames For noncompliant Tier 1 statements related to precast concrete frame elements and connections, an analysis shall be performed in accordance with Section 5.2.4, and the adequacy of the precast frame elements or connections as force-controlled elements shall be evaluated in accordance with Section 5.2.5.

5.5.2.5 Procedures for Frames Not Part of the Seismic-Force-Resisting System

5.5.2.5.1 Complete Frames An analysis shall be performed in accordance with Section 5.2.4, and the shear walls for the combined gravity and seismic demands shall be evaluated in accordance with Section 5.2.5.

5.5.2.5.2 Deflection Compatibility An analysis shall be performed in accordance with Section 5.2.4, and the adequacy of all secondary components, including moment-frame elements and connections for the flexure and shear demands at the maximum interstory drifts for all noncompliant elements, shall be evaluated in accordance with Section 5.2.5.

5.5.2.5.3 Flat Slabs An analysis shall be performed in accordance with Section 5.2.4, and the column–slab joints for punching shear and shear transfer caused by moments at the maximum interstory drifts shall be evaluated in accordance with Section 5.2.5.

5.5.3 Procedures for Shear Walls

5.5.3.1 General Procedures for Shear Walls

5.5.3.1.1 Shear Stress Check An analysis shall be performed in accordance with Section 5.2.4, and the adequacy of the shear wall elements shall be evaluated in accordance with Section 5.2.5.

5.5.3.1.2 Wall Thickness and Proportions An analysis shall be performed in accordance with Section 5.2.4, and the adequacy of the shear wall elements to resist out-of-plane forces in combination with vertical loads shall be evaluated in accordance with Section 5.2.5.

5.5.3.1.3 Reinforcement Steel An analysis shall be performed in accordance with Section 5.2.4, and the adequacy of the shear wall elements shall be evaluated in accordance with Section 5.2.5.

5.5.3.1.4 Overturning The overturning demands for noncompliant walls shall be calculated in accordance with Section 5.2.4, and the adequacy of the shear walls shall be evaluated in accordance with Section 5.2.5.

5.5.3.1.5 Reinforcement at Openings The flexural and shear demands around shear wall openings shall be calculated in accordance with Section 5.2.4, and the adequacy of the piers and spandrels shall be evaluated in accordance with Section 5.2.5.

5.5.3.2 Procedures for Concrete Shear Walls

5.5.3.2.1 Coupling Beams An analysis shall be performed in accordance with Section 5.2.4, and the adequacy for flexure and shear of all noncompliant coupling beams shall be evaluated in accordance with Section 5.2.5. If the coupling beams are inadequate, the adequacy of the coupled walls shall be evaluated as if they are independent walls.

5.5.3.2.2 Confinement Reinforcement The shear and flexural demands on the noncompliant walls shall be calculated in accordance with Section 5.2.4, and the adequacy of the shear walls shall be evaluated in accordance with Section 5.2.5.

5.5.3.2.3 Wall Connections The shear and flexural demands on the shear walls shall be calculated in accordance with Section 5.2.4, and the adequacy of the connection to transfer shear between the walls and the steel frame shall be evaluated in accordance with Section 5.2.5.

5.5.3.2.4 Column Splices The tension demands caused by overturning forces on noncompliant columns shall be calculated in accordance with Section 5.2.4, and the adequacy of the splice connections shall be evaluated in accordance with Section 5.2.5.

5.5.3.3 Procedures for Precast Concrete Shear Walls

5.5.3.3.1 Wall Openings The adequacy of the remaining wall shall be evaluated for shear and overturning forces determined in accordance with Section 5.2.4, and the adequacy of the shear transfer connection between the diaphragm and the wall shall be evaluated in accordance with Section 5.2.5. The adequacy of the

connection between any collector elements and the wall also shall be evaluated in accordance with Section 5.2.5.

C5.5.3.3.1 Wall Openings Walls are compliant if an adequate load path for shear transfer, collector forces, and overturning resistance can be demonstrated.

5.5.3.3.2 Corner Openings An analysis shall be performed in accordance with Section 5.2.4. The adequacy of the diaphragm to transfer shear and spandrel panel forces to the remainder of the wall beyond the opening shall be evaluated in accordance with Section 5.2.5.

5.5.3.3.3 Panel-to-Panel Connections An analysis shall be performed in accordance with Section 5.2.4, and the adequacy of the welded inserts to transfer overturning forces as force-controlled elements shall be evaluated in accordance with Section 5.2.5. Alternatively, the panels shall be evaluated as independent elements without consideration of coupling between panels.

5.5.3.4 Procedures for Unreinforced Masonry Shear Walls

5.5.3.4.1 Masonry Layup When filled collar joints of multi-wythe masonry walls have voids, an analysis shall be performed in accordance with Section 5.2.4, and the adequacy for in-plane shear demands shall be evaluated using only the inner wythe, or wythes when more than two wythes are present, of the wall for capacity. For out-of-plane demands, evaluate each wythe independently. Evaluate the anchorage of the outer wythe as a veneer in accordance with Chapter 13.

5.5.3.5 Procedures for Infill Walls in Frames

5.5.3.5.1 Wall Connections The out-of-plane demands on the wall shall be calculated in accordance with Section 5.2.4, and the adequacy of the connection to the frame shall be evaluated in accordance with Section 5.2.5.

5.5.3.5.2 Cavity Walls When infill walls are of cavity construction, an analysis shall be performed in accordance with Section 5.2.4, and the adequacy for in-plane shear demands using only the inner wythe of the wall for capacity shall be evaluated in accordance with Section 5.2.5. For out-of-plane demands, each wythe shall be evaluated independently. The anchorage of the outer wythe as a veneer shall be evaluated in accordance with Chapter 13.

5.5.3.5.3 Masonry Infill Walls When the infill wall does not extend to the soffit of the frame beam or to the columns on either side, the capacity of columns adjacent to nonconforming walls shall be evaluated for the shear force required to develop the flexural capacity of the column over the clear height above the infill.

5.5.3.6 Procedures for Walls in Wood Frame Buildings

5.5.3.6.1 Stucco, Gypsum Wallboard, Plaster, or Narrow Shear Walls The overturning and shear demands for noncompliant walls shall be calculated in accordance with Section 5.2.4, and the adequacy shall be evaluated in accordance with Section 5.2.5.

5.5.3.6.2 Shear Walls Connected through Floors The overturning and shear demands for noncompliant walls shall be calculated in accordance with Section 5.2.4, and the adequacy of the structure to transfer forces through the floors shall be evaluated in accordance with Section 5.2.5.

5.5.3.6.3 Hillside Site Conditions An analysis shall be performed in accordance with Section 5.2.4, and the shear and overturning demands on the shear walls, including torsion effects of the hillside, shall be calculated. The adequacy of the shear walls shall be evaluated in accordance with Section 5.2.5.

5.5.3.6.4 Cripple Walls The shear demand for noncompliant walls shall be calculated in accordance with Section 5.2.4, and the adequacy of the walls shall be evaluated in accordance with Section 5.2.5.

5.5.3.6.5 Openings The overturning and shear demands on noncompliant walls shall be calculated in accordance with Section 5.2.4, and the adequacy of the shear walls shall be evaluated in accordance with Section 5.2.5.

5.5.3.6.6 Hold-Down Anchors The overturning and shear demands for noncompliant walls shall be calculated in accordance with Section 5.2.4, and the adequacy of the shear walls shall be evaluated in accordance with Section 5.2.5.

5.5.4 Procedures for Braced Frames

5.5.4.1 Axial Stress Check An analysis shall be performed in accordance with Section 5.2.4. The adequacy of the braced frame elements shall be evaluated in accordance with Section 5.2.5.

C5.5.4.1 Axial Stress Check The axial stress check provides a quick assessment of the overall level of demand on the structure. The concern is the overall strength of the building.

5.5.4.2 Column Splices The tension demands on noncompliant columns shall be calculated in accordance with Section 5.2.4, and the adequacy of the splice connections shall be evaluated in accordance with Section 5.2.5.

5.5.4.3 Slenderness of Diagonals The compression demands in noncompliant braces shall be calculated in accordance with Section 5.2.4, and the adequacy of the braces shall be evaluated for buckling in accordance with Section 5.2.5.

5.5.4.4 Connection Strength The demands on the noncompliant connections shall be calculated in accordance with Section 5.2.4, and the adequacy of the brace connections shall be evaluated in accordance with Section 5.2.5.

5.5.4.5 Out-of-Plane Restraint for Braced Frames An analysis shall be performed in accordance with Section 5.2.4, and the adequacy of the noncompliant beam for all gravity and seismic actions concurrent with a horizontal out-of-plane force equal to 2% of the brace compression force applied at the bottom flange of the beam shall be evaluated in accordance with Section 5.2.5.

5.5.4.6 K-Bracing and Chevron-Bracing Configurations An analysis shall be performed in accordance with Section 5.2.4, and the adequacy of all beams and columns, including the concurrent application of unbalanced forces resulting from the tensile strength of one brace assuming the other brace has buckled in compression, shall be evaluated.

5.5.4.7 Tension-Only Braces An analysis shall be performed in accordance with Section 5.2.4, and the adequacy of the tension-only braces shall be evaluated in accordance with Section 5.2.5.

5.5.4.8 Concentrically Braced Frame Joints An analysis shall be performed in accordance with Section 5.2.4. The axial, flexural, and shear demands, including the demands caused by eccentricity of the braces, shall be calculated. The adequacy of the joints shall be evaluated in accordance with Section 5.2.5.

5.6 PROCEDURES FOR DIAPHRAGMS

This section provides Tier 2 deficiency-based evaluation procedures that apply to all noncompliant diaphragm checklist evaluation statements.

5.6.1 General Procedures for Diaphragms

5.6.1.1 Diaphragm and Roof Chord Continuity The load path around the discontinuity shall be identified. The diaphragm shall be analyzed for the forces in accordance with Section 5.2.4, and the adequacy of the elements in the load path shall be evaluated in accordance with Section 5.2.5.

5.6.1.2 Diaphragm Cross Ties The out-of-plane forces shall be calculated in accordance with Section 7.2.11, and the adequacy of the existing connections, including development of the forces into the diaphragm, shall be evaluated in accordance with Section 5.2.5.

5.6.1.3 Openings in Diaphragms at Shear Walls, Braced Frames, and Moment Frames The diaphragm forces shall be calculated in accordance with Section 5.2.4, and the adequacy of the diaphragm to transfer the loads to the wall or frames, considering the available length and the presence of any drag struts, shall be evaluated in accordance with Section 5.2.5. For concrete and masonry walls, the adequacy of the wall and diaphragm connections to resist out-of-plane forces with the wall spanning out-of-plane between points of anchorage shall be evaluated in accordance with Section 5.2.5.

5.6.1.4 Plan Irregularities in Diaphragms The chord and collector demands at locations of plan irregularities shall be calculated by analyzing the diaphragm in accordance with Section 5.2.4. It shall be permitted to consider the relative movement of the projecting wings of the structure by applying the static base shear, assuming that each wing moves in the same direction or each wing moves in opposing directions, whichever is more severe. The adequacy of all elements that can contribute to the tensile capacity at the location of the irregularity shall be evaluated in accordance with Section 5.2.5.

5.6.1.5 Diaphragm Reinforcement at Openings The shear and flexural demands at major openings shall be calculated, and the resulting chord forces shall be determined in accordance with Section 5.2.4. The adequacy of the diaphragm elements to transfer forces around the opening shall be evaluated in accordance with Section 5.2.5.

5.6.2 Procedures for Wood Diaphragms For wood diaphragms with noncompliant spans or aspect ratios, an analysis of the diaphragm shall be performed in accordance with Section 5.2.4, and the adequacy of the diaphragm system shall be evaluated in accordance with Section 5.2.5. The diaphragm deflection shall be calculated, and the adequacy of the vertical-load-carrying elements at the maximum deflection, including P-delta effects, shall be evaluated.

5.6.3 Procedures for Metal Deck Diaphragms For untopped metal deck diaphragms with noncompliant spans or aspect ratios, an analysis of the diaphragm shall be performed in accordance with Section 5.2.4, and the adequacy of the shear capacity shall be evaluated in accordance with Section 5.2.5. Diaphragms shall be evaluated for the forces in Chapter 7. The adequacy of the shear capacity of the metal deck diaphragm shall be evaluated.

5.6.4 Procedures for Precast Concrete Diaphragms Noncompliant precast concrete diaphragms shall be evaluated for the forces determined in accordance with Section 5.2.4. The adequacy of the slab element interconnection and the shear capacity shall be evaluated in accordance with Section 5.2.5.

5.6.5 Diaphragms Other than Wood, Metal Deck, Concrete, or Horizontal Bracing An analysis of the diaphragm system shall be performed in accordance with Section 5.2.4, and the adequacy of the system shall be evaluated in accordance with Section 5.2.5 or using available reference standards for the capacity of the diaphragm not covered by this standard.

5.7 PROCEDURES FOR CONNECTIONS

This section provides Tier 2 deficiency-based evaluation procedures that apply to all noncompliant connection checklist evaluation statements.

5.7.1 Anchorage for Normal Forces

5.7.1.1 Wall Anchorage Where the wall anchorage is noncompliant with the Tier 1 Quick Check procedure, a more detailed analysis of the wall anchorage system may be performed in accordance with Sections 5.2.4 and 5.2.5 to demonstrate compliance. Alternatively, the adequacy of non-load-bearing walls to span between points of anchorage may be evaluated.

5.7.1.2 Stiffness of Wall Anchors The amount of relative movement possible given the existing connection configuration shall be determined. The impact of this movement shall be evaluated by analyzing the elements of the connection for forces induced by the maximum potential movement.

5.7.1.3 Wood Ledgers with Cross-Grain Bending No Tier 2 procedure is available to demonstrate compliance of wood ledgers loaded in cross-grain bending.

5.7.1.4 Precast Concrete Panel Connections The stability of the wall panels for the out-of-plane forces in accordance with Section 5.2.4 shall be evaluated. The adequacy of the existing connections to deliver all forces into the diaphragm, including moments caused by eccentricities between the panel center of mass and points of anchorage, shall be evaluated.

5.7.2 Connections for Shear Transfer The diaphragm and wall demands shall be calculated in accordance with Section 5.2.4, and the adequacy of the connection to transfer the demands to shear walls, steel frames, or infill frames shall be evaluated in accordance with Section 5.2.5.

5.7.3 Connections for Vertical Elements

5.7.3.1 Steel and Concrete Columns The column demands, including any axial load caused by overturning, shall be calculated in accordance with Section 5.2.4, and the adequacy of the connection to transfer the demands to the foundation shall be evaluated in accordance with Section 5.2.5.

5.7.3.2 Shear Wall Boundary Columns Shear wall demands shall be determined in accordance with Section 5.2.4. The overturning resistance of the shear wall considering the dead load above the foundation and the portion of the foundation dead load that can be activated by the boundary column anchorage connection shall be evaluated in accordance with Section 5.2.5.

5.7.3.3 Wood Posts and Sills No Tier 2 evaluation procedure is available for wood posts without positive connections to the foundation. For wood sills, it shall be permitted to evaluate the adequacy of alternate methods of shear attachment for seismic forces determined in accordance with Section 5.2.4.

5.7.3.4 Concrete Walls, Precast Wall Panels, and Other Wall Panels The wall demands shall be calculated in accordance with

Section 5.2.4, and the adequacy of any load path to transfer the demands to the foundation shall be evaluated in accordance with Section 5.2.5.

5.7.3.5 Uplift at Pile Caps The axial forces caused by overturning and shear demands at the pile cap shall be calculated in accordance with Section 5.2.4, and the adequacy of the pile cap reinforcement and pile connections to transfer uplift forces to the piles shall be evaluated in accordance with Section 5.2.5.

5.7.4 Interconnection of Elements

5.7.4.1 Girder–Column Connection No Tier 2 procedure is available to demonstrate compliance of girder–column connections found noncompliant.

5.7.4.2 Girders Supported by Walls or Pilasters A determination shall be made as to whether the girder connection at the pilaster is required to resist wall out-of-plane forces. The adequacy of the connection to resist the anchorage forces in accordance with Section 5.2.4 shall be determined and shall be evaluated in accordance with Section 5.2.5.

5.7.4.3 Corbel Bearing and Connections The story drift shall be calculated in accordance with Section 5.2.4. For bearing length noncompliance, the bearing length shall be sufficient to provide support for the girders at maximum drift. The adequacy of the bearing support for all loads, including any additional eccentricity at maximum drift, shall be evaluated in accordance with Section 5.2.5. For welded connection noncompliance, the force in the welded connections induced by the story drift shall be calculated. The adequacy of the connections to resist these forces shall be evaluated. Calculated overstresses in these connections shall not jeopardize the vertical support of the girders or the seismic-force-resisting system.

5.7.4.4 Beam, Girder, and Truss Supported on Unreinforced Masonry (URM) Walls or URM Pilasters No Tier 2 procedure is available to demonstrate compliance of beams, girders, or trusses without a secondary load path.

C5.7.4.4 Beam, Girder, and Truss Supported on Unreinforced Masonry (URM) Walls or URM Pilasters Retrofit measures include adding secondary columns that support vertical loads of roof and floor members of beams, girders, or trusses supported on URM walls or pilasters.

5.7.5 Roof and Wall Panel Connections The panel demands shall be calculated in accordance with Section 5.2.4, and the adequacy of the panels to transfer the demands to the framing shall be evaluated in accordance with Section 5.2.5.

5.8 TIER 2 DEFICIENCY-BASED RETROFIT REQUIREMENTS

When a Tier 2 deficiency-based retrofit is to be performed, deficiencies identified by a Tier 1 screening or Tier 2 evaluation shall be mitigated by implementation of retrofit measures in accordance with this standard. The resulting building, including strengthening measures, shall comply with the appropriate Tier 1 screening or with a Tier 2 deficiency-based evaluation for all potential deficiencies that the design professional identifies in the Tier 1 screening. The design professional shall perform Tier 2 analysis and evaluation as necessary to demonstrate the adequacy of all new structural elements, connections, and details added and all existing structural elements, connections, and details modified as part of the rehabilitation. Analysis and acceptance criteria of Section 5.3 shall be used in conjunction with the procedures in Sections 5.4 through 5.8. Compliance with Tier 2 retrofit procedures shall not be based on the Quick Check procedures in Section 4.5.3.

C5.8 TIER 2 DEFICIENCY-BASED RETROFIT REQUIREMENTS

The deficiency-based procedure described in this chapter is one of the two retrofit methods defined in Chapter 3. It is to be used only by a design professional and only in a manner consistent with this standard. Consideration must be given to all aspects of the retrofit process, including the development of appropriate as-built information, proper design of retrofit techniques, and specification of appropriate levels of quality assurance.

Buildings that have configuration irregularities (as determined by a Tier 1 screening or Tier 2 evaluation) may use this deficiency-based retrofit method to achieve the selected Building Performance Level only if the resulting retrofit work eliminates all significant vertical and horizontal irregularities and results in a building with a complete seismic-force-resisting load path.

For simple buildings with specific deficiencies, it is possible and advisable to prioritize the rehabilitation measures. This step is often useful where retrofit construction has limited funding or must take place while the building is occupied. In both these situations, it is preferable to correct the worst deficiency first. Potential deficiencies are ranked in Tables C5-1 through C5-19; items in these tables are ordered roughly from highest priority at the top to lowest at the bottom, although this order can vary widely in individual cases. Tables C5-1 through C5-19 are presented at the end of this chapter.

Tier 1 lists specific deficiencies both by Common Building Type and by association with each building system. Tables C5-1 through C5-19 of this standard further group deficiencies by general characteristics. For example, the deficiency listing "Diaphragm stiffness and strength" includes deficiencies related to the type of sheathing used, diaphragm span, and lack of blocking.

Within the table for each Common Building Type, typical deficiencies are ranked from most critical at the top of each deficiency group to least critical at the bottom. For example, in Table C5-12, in a precast or tilt-up concrete shear wall with flexible diaphragm (PC1) building, the lack of positive gravity frame connections (e.g., of girders to posts by sheet metal hardware or bolts) has a greater potential to lower the building's performance (a partial collapse of the roof structure supported by the beam) than a deficiency in seismic forces on foundations (e.g., poor reinforcing in the footings).

The ranking was based on the following characteristics of each deficiency group:

1. Most critical
   - 1.1. Global building systems: those with a discontinuous load path and little redundancy
   - 1.2. Building local components: those with low strength and low ductility
2. Intermediate
   - 2.1. Global building systems: those with a discontinuous load path but substantial redundancy
   - 2.2. Building local components: those with substantial strength but low ductility
3. Least critical
   - 3.1. Global building systems: those with a substantial load path but little redundancy
   - 3.2. Building local components: those with low strength but substantial ductility

The intent of Tables C5-1 through C5-19 is to guide the design professional in accomplishing a Partial Retrofit Objective. For example, if the foundation is strengthened in a PC1 building but a poor girder–wall connection is left alone, relatively little has been done to improve the expected performance of the building. Considerable professional judgment must be used where evaluating a structure's unique behavior and determining which deficiencies should be strengthened and in what order.

As a rule, the resulting retrofitted building must be one of the Common Building Types. For example, adding concrete shear walls to concrete shear wall buildings or adding a complete system of concrete shear walls to a concrete frame building meets this requirement. Steel bracing may be used to strengthen wood or URM construction. For large buildings, it is advisable to explore several retrofit strategies and compare alternative ways of eliminating deficiencies. A Tier 1 screening and a Tier 2 evaluation of the proposed retrofitted state is performed to verify the proposed retrofit design.

For Limited Performance Objectives, the deficiencies identified by the Tier 1 screening or Tier 2 evaluation should be mitigated in order of priority based on the ranking of deficiencies.

A complete evaluation of the building should confirm that the strengthening of any one component or system has not merely shifted the deficiency to another. Deficiencies should be corrected in priority order and in a way that will facilitate fulfillment of the requirements of a higher objective at a later date. Care must be taken to ensure that a partial retrofit effort does not make the building's overall performance worse by unintentionally channeling failure to a more critical component.

Table C5-1. W1: Wood Light Frame

Typical Deficiencies
Load path
Redundancy
Vertical irregularities
Shear walls in wood frame buildings
Shear stress
Openings
Wall detailing
Cripple walls
Narrow wood shear walls
Stucco shear walls
Gypsum wallboard or plaster shear walls
Diaphragm openings
Diaphragm stiffness and strength
Spans
Diaphragm continuity
Anchorage to foundations
Condition of foundations
Geologic site hazards
Condition of wood

Table C5-2. W1a: Multi-Story, Multi-Unit Wood Frame Construction

Typical Deficiencies
Load path
Redundancy
Vertical irregularities
Shear walls in wood frame buildings
Shear stress
Openings
Wall detailing
Cripple walls
Narrow wood shear walls
Stucco shear walls
Gypsum wallboard or plaster shear walls
Diaphragm openings
Diaphragm stiffness and strength
Spans
Diaphragm continuity
Anchorage to foundations
Condition of foundations
Geologic site hazards
Condition of wood

Table C5-3. W2: Wood, Commercial and Industrial

Typical Deficiencies
Load path
Redundancy
Vertical irregularities
Shear walls in wood frame buildings
Shear stress
Openings
Wall detailing
Cripple walls
Narrow wood shear walls
Stucco shear walls
Gypsum wallboard or plaster shear walls
Diaphragm openings
Diaphragm stiffness and strength
Sheathing
Unblocked diaphragms
Spans
Span-to-depth ratio
Diaphragm continuity
Chord continuity
Anchorage to foundations
Condition of foundations
Geologic site hazards
Condition of wood

Table C5-4. S1 and S1a: Steel Moment Frames with Stiff or Flexible Diaphragms

Typical Deficiencies
Load path
Redundancy
Vertical irregularities
Plan irregularities
Adjacent buildings
Uplift at pile caps
Steel moment frames
Drift check
Frame concerns
Strong column–weak beam
Connections
Reentrant corners
Diaphragm openings
Diaphragm stiffness and strength
Diaphragm–frame shear transfer
Anchorage to foundations
Condition of foundations
Overturning
Lateral loads
Geologic site hazards
Condition of steel

Table C5-5. S2 and S2a: Steel Braced Frames with Stiff or Flexible Diaphragms

Typical Deficiencies
Load path
Redundancy
Vertical irregularities
Plan irregularities
Uplift at pile caps
Stress level
Stiffness of diagonals
Chevron or K-bracing
Braced frame connections
Reentrant corners
Diaphragm openings
Diaphragm stiffness and strength
Diaphragm–frame shear transfer
Anchorage to foundations
Condition of foundations
Overturning
Lateral loads
Geologic site hazards
Condition of steel

Table C5-6. S3: Steel Light Frames

Typical Deficiencies
Load path
Redundancy
Vertical irregularities
Plan irregularities
Steel moment frames
Frame concerns
Masonry shear walls
Infill walls
Steel braced frames
Stress level
Braced frame connections
Reentrant corners
Diaphragm openings
Diaphragm–frame shear transfer
Wall panels and cladding
Light gauge metal, plastic, or cementitious roof panels
Anchorage to foundations
Condition of foundations
Geologic site hazards
Condition of steel

Table C5-7. S4: Steel Frames with Concrete Shear Walls

Typical Deficiencies
Load path
Redundancy
Vertical irregularities
Plan irregularities
Uplift at pile caps
Cast-in-place concrete shear walls
Shear stress
Overturning
Coupling beams
Boundary component detailing
Wall reinforcement
Reentrant corners
Diaphragm openings
Diaphragm stiffness and strength
Diaphragm–wall shear transfer
Anchorage to foundations
Condition of foundations
Overturning
Lateral loads
Geologic site hazards
Condition of steel
Condition of concrete

Table C5-8. S5 and S5a: Steel Frames with Infill Masonry Shear Walls and Stiff or Flexible Diaphragms

Typical Deficiencies
Load path
Redundancy
Vertical irregularities
Plan irregularities
Uplift at pile caps
Frames not part of the seismic-force-resisting system
Complete frames
Masonry shear walls
Reinforcing in masonry walls
Shear stress
Reinforcing at openings
Unreinforced masonry shear walls
Proportions, solid walls
Infill walls
Reentrant corners
Diaphragm openings
Diaphragm stiffness and strength
Span-to-depth ratio
Diaphragm–wall shear transfer
Anchorage for normal forces
Anchorage to foundations
Condition of foundations
Overturning
Lateral loads
Geologic site hazards
Condition of steel
Quality of masonry

Table C5-9. C1: Concrete Moment Frames

Typical Deficiencies
Load path
Redundancy
Vertical irregularities
Plan irregularities
Adjacent buildings
Uplift at pile caps
Deflection compatibility
Concrete moment frames
Quick Checks, frame and nonductile detail concerns
Precast moment frame concerns
Frames not part of the seismic-force-resisting system
Captive columns
Reentrant corners
Diaphragm openings
Diaphragm stiffness and strength
Diaphragm–frame shear transfer
Precast connections
Anchorage to foundations
Condition of foundations
Overturning
Lateral loads
Geologic site hazards
Condition of concrete

Table C5-10. C2 and C2a: Concrete Shear Walls with Stiff or Flexible Diaphragms

Typical Deficiencies
Load path
Redundancy
Vertical irregularities
Plan irregularities
Uplift at pile caps
Deflection compatibility
Frames not part of the seismic-force-resisting system
Captive columns
Cast-in-place concrete shear walls
Shear stress
Overturning
Coupling beams
Boundary component detailing
Wall reinforcement
Reentrant corners
Diaphragm openings
Diaphragm stiffness and strength
Sheathing
Diaphragm–wall shear transfer
Anchorage to foundations
Condition of foundations
Overturning
Lateral loads
Geologic site hazards
Condition of concrete

Table C5-11. C3 and C3a: Concrete Frames with Infill Masonry Shear Walls and Stiff or Flexible Diaphragms

Typical Deficiencies
Load path
Redundancy
Vertical irregularities
Plan irregularities
Uplift at pile caps
Deflection compatibility
Frames not part of the seismic-force-resisting system
Complete frames
Masonry shear walls
Reinforcing in masonry walls
Shear stress
Reinforcing at openings
Unreinforced masonry shear walls
Proportions, solid walls
Infill walls
Reentrant corners
Diaphragm openings
Diaphragm stiffness and strength
Span-to-depth ratio
Diaphragm–wall shear transfer
Anchorage for normal forces
Anchorage to foundations
Condition of foundations
Overturning
Lateral loads
Geologic site hazards
Condition of concrete
Quality of masonry

Table C5-12. PC1: Precast or Tilt-Up Concrete Shear Walls with Flexible Diaphragms

Typical Deficiencies
Load path
Redundancy
Vertical irregularities
Plan irregularities
Deflection compatibility
Diaphragm–wall shear transfer
Anchorage for normal forces
Girder–wall connections
Stiffness of wall anchors
Precast concrete shear walls
Panel-to-panel connections
Wall openings
Collectors
Reentrant corners
Cross ties
Diaphragm openings
Diaphragm stiffness and strength
Sheathing
Unblocked diaphragms
Span-to-depth ratio
Chord continuity
Anchorage to foundations
Condition of foundation
Overturning
Lateral loads
Geologic site hazards
Condition of concrete

Table C5-13. PC1a: Precast or Tilt-Up Concrete Shear Walls with Stiff Diaphragms

Typical Deficiencies
Load path
Redundancy
Vertical irregularities
Plan irregularities
Precast concrete shear walls
Panel-to-panel connections
Wall openings
Collectors
Reentrant corners
Diaphragm openings
Diaphragm stiffness and strength
Diaphragm–wall shear transfer
Anchorage for normal forces
Girder–wall connections
Anchorage to foundations
Condition of foundations
Overturning
Lateral loads
Geologic site hazards
Condition of concrete

Table C5-14. PC2: Precast Concrete Frames with Shear Walls

Typical Deficiencies
Load path
Redundancy
Vertical irregularities
Plan irregularities
Uplift at pile caps
Deflection compatibility
Concrete moment frames
Precast moment frame concerns
Cast-in-place concrete shear walls
Shear stress
Overturning
Coupling beams
Boundary component detailing
Wall reinforcement
Reentrant corners
Cross ties
Diaphragm openings
Diaphragm stiffness and strength
Diaphragm–wall shear transfer
Anchorage for normal forces
Girder–wall connections
Precast connections
Anchorage to foundations
Condition of foundations
Overturning
Lateral loads
Geologic site hazards
Condition of concrete

Table C5-15. PC2a: Precast Concrete Frames without Shear Walls

Typical Deficiencies
Load path
Redundancy
Vertical irregularities
Plan irregularities
Adjacent buildings
Uplift at pile caps
Deflection compatibility
Concrete moment frames
Precast moment frame concerns
Frames not part of the seismic-force-resisting system
Short captive columns
Reentrant corners
Diaphragm openings
Diaphragm stiffness and strength
Diaphragm–frame shear transfer
Precast connections
Anchorage to foundations
Condition of foundations
Overturning
Lateral loads
Geologic site hazards
Condition of concrete

Table C5-16. RM1: Reinforced Masonry Bearing Wall Buildings with Flexible Diaphragms

Typical Deficiencies
Load path
Redundancy
Vertical irregularities
Plan irregularities
Diaphragm–wall shear transfer
Anchorage for normal forces
Stiffness of wall anchors
Masonry shear walls
Reinforcing in masonry walls
Shear stress
Reinforcing at openings
Reentrant corners
Cross ties
Diaphragm openings
Diaphragm stiffness and strength
Sheathing
Unblocked diaphragms
Span-to-depth ratio
Anchorage to foundations
Condition of foundations
Geologic site hazards
Quality of masonry

Table C5-17. RM2: Reinforced Masonry Bearing Wall Buildings with Stiff Diaphragms

Typical Deficiencies
Load path
Redundancy
Vertical irregularities
Plan irregularities
Masonry shear walls
Reinforcing in masonry walls
Shear stress
Reinforcing at openings
Reentrant corners
Diaphragm openings
Diaphragm stiffness and strength
Diaphragm–wall shear transfer
Anchorage for normal forces
Anchorage to foundations
Condition of foundations
Geologic site hazards
Quality of masonry

Table C5-18. URM: Unreinforced Masonry Bearing Wall Buildings with Flexible Diaphragms

Typical Deficiencies
Load path
Redundancy
Vertical irregularities
Plan irregularities
Adjacent buildings
Diaphragm–wall shear transfer
Anchorage for normal forces
Stiffness of wall anchors
Masonry shear walls
Unreinforced masonry shear walls
Properties, solid walls
Reentrant corners
Cross ties
Diaphragm openings
Diaphragm stiffness and strength
Sheathing
Unblocked diaphragms
Span-to-depth ratio
Anchorage to foundations
Condition of foundations
Geologic site hazards
Quality of masonry

Table C5-19. URMa: Unreinforced Masonry Bearing Walls in Buildings with Stiff Diaphragms

Typical Deficiencies
Load path
Redundancy
Vertical irregularities
Plan irregularities
Adjacent buildings
Masonry shear walls
Unreinforced masonry shear walls
Properties, solid walls
Reentrant corners
Diaphragm openings
Diaphragm stiffness and strength
Diaphragm–wall shear transfer
Anchorage for normal forces
Anchorage to foundations
Condition of foundations
Geologic site hazards
Quality of masonry

CHAPTER 6
TIER 3 SYSTEMATIC EVALUATION AND RETROFIT

6.1 SCOPE

This chapter sets forth the requirements and procedures for performing Tier 3 systematic evaluations and retrofits. These procedures shall be used where systematic procedures are required in accordance with Chapter 3 and may be used as a further investigation of buildings where the deficiency-based evaluation procedures have been used.

Section 6.2 provides data collection requirements that are in addition to those in Section 3.2. Based on the level of data collection performed, a knowledge factor shall be determined in accordance with Section 6.2.4. Sections 6.3 and 6.4 provide requirements for Tier 3 evaluation and retrofit, respectively.

C6.1 SCOPE

The Tier 3 systematic procedure involves an analysis of the entire building, either in its current condition or with proposed retrofit measures, using the provisions in Chapters 7 through 12 for the structural systems and Chapter 13 for nonstructural components. The procedure is similar in scope and process to the Systematic Rehabiltiation Method contained in ASCE 41-06.

Even where Tier 3 is required for evaluation in accordance with Chapter 3, the design professional is encouraged to use the Tier 1 evaluation procedure in Chapter 4 to gain a general understanding of the building and potential deficiencies before embarking on a Tier 3 evaluation.

Where Tier 3 is considered as a follow-up to a Tier 1 or Tier 2 evaluation, the decision about whether to use this Tier 3 evaluation requires judgment regarding the likelihood of finding that Tier 1 or Tier 2 evaluations are too conservative and regarding whether there would be a significant economic or other advantage to a more detailed evaluation.

6.2 DATA COLLECTION REQUIREMENTS

Investigation of as-built conditions and data collection requirements shall be in accordance with Section 3.2 and the requirements of this section. Data shall be obtained from available drawings, specifications, and other documents for the existing construction. Data collected from available documents shall be supplemented and verified by on-site investigations, including nondestructive examination and testing of building materials and components as required in this section.

Data on the as-built condition of the structure, components, site, and adjacent buildings shall be collected in sufficient detail to perform the selected analysis procedure. The extent of data collected shall be consistent with minimum, usual, or comprehensive levels of knowledge as specified in Sections 6.2.1, 6.2.2, or 6.2.3, respectively. The required level of knowledge shall be determined considering the selected Performance Objective and analysis procedure in accordance with Table 6-1.

To account for any uncertainty associated with component as-built information, a knowledge factor κ shall be used in the capacity evaluation as specified in Section 6.2.4.

C6.2 DATA COLLECTION REQUIREMENTS

The extent of testing or use of knowledge factor is permitted to be waived if it is determined that at the time of construction there were adequate testing or inspection processes in place to justify the properties specified in the design drawings.

6.2.1 Minimum Data Collection Requirements As a minimum, collection of as-built information shall consist of the following:

1. Information shall be obtained from design drawings with sufficient information to analyze component demands and calculate component capacities. For minimum data collection, the design drawings shall show, as a minimum, the configuration of the gravity load system and seismic-force-resisting system and typical connections with sufficient detail to carry out linear analysis procedures. Where design drawings are available, information shall be verified by a visual condition assessment in accordance with Chapters 9 through 12.
2. In the absence of sufficient information from design drawings, incomplete or nonexistent information shall be supplemented by a comprehensive condition assessment, including destructive and nondestructive investigation, in accordance with Chapters 9 through 12.
3. In the absence of material test records and quality assurance reports, use of default material properties in accordance with Chapters 9 through 12 shall be permitted.
4. Information needed on adjacent buildings, referenced in Section 3.2.5, shall be gained through field surveys and research of as-built information made available by the owner of the subject building.
5. Site and foundation information shall be collected in accordance with Section 3.2.4.

6.2.2 Usual Data Collection Requirements Usual collection of as-built information shall consist of the following:

1. Information shall be obtained from design drawings with sufficient information to analyze component demands and calculate component capacities. For usual data collection, the design drawings shall show, as a minimum, the configuration of the gravity load system and seismic-force-resisting system and typical connections with sufficient

Table 6-1. Data Collection Requirements

Data	Level of Knowledge						
	Minimum			Usual		Comprehensive	
Performance Level	Life Safety or lower			Life Safety or lower		Greater than Life Safety	
Analysis Procedures	LSP, LDP			All		All	
Testing	No tests			Usual testing		Comprehensive testing	
Drawings	Design drawings or equivalent		No drawings	Design drawings or equivalent		Construction documents or equivalent	
Condition assessment	Visual	Visual	Comprehensive	Visual	Comprehensive	Visual	Comprehensive
Material properties	From default values	From design drawings	From default values	From drawings and tests	From usual tests	From documents and tests	From comprehensive tests
Knowledge factor (κ)	0.75	0.9[a,b]	0.75	1.00	1.00	1.00	1.00

NOTE: LSP, linear static procedure; LDP, linear dynamic procedure.
[a]If the building meets the benchmark requirements of Table 4-5, then κ = 1.0.
[b]If inspection or testing records are available to substantiate the design drawings, then κ = 1.0.

detail to carry out the selected analysis procedure. Where design drawings are available, information shall be verified by a visual condition assessment in accordance with Chapters 9 through 12.

2. In the absence of sufficient information from design drawings, incomplete or nonexistent information shall be supplemented by a comprehensive condition assessment, including destructive and nondestructive investigation, in accordance with Chapters 9 through 12.
3. In the absence of material test records and quality assurance reports, material properties shall be determined by usual materials testing in accordance with Chapters 9 through 12.
4. Information needed on adjacent buildings, referenced in Section 3.2.5, shall be gained through field surveys and research of as-built information made available by the owner of the subject building.
5. Site and foundation information shall be collected in accordance with Section 3.2.4.

6.2.3 Comprehensive Data Collection Requirements Comprehensive collection of as-built information shall consist of the following:

1. Information shall be obtained from construction documents including design drawings, specifications, material test records, and quality assurance reports covering original construction and subsequent modifications to the structure. Where construction documents are available, information shall be verified by a visual condition assessment in accordance with Chapters 9 through 12.
2. If construction documents are incomplete, missing information shall be supplemented by a comprehensive condition assessment, including destructive and nondestructive investigation, in accordance with Chapters 9 through 12.
3. In the absence of material test records and quality assurance reports, material properties shall be determined by comprehensive materials testing in accordance with Chapters 9 through 12, including the limitations on the coefficient of variation.
4. Information needed on adjacent buildings, referenced in Section 3.2.5, shall be gained through field surveys and research of as-built information made available by the owner of the subject building.
5. Site and foundation information shall be collected in accordance with Section 3.2.4.

C.6.2.3 Comprehensive Data Collection Requirements Where materials testing results have a coefficient of variation greater than the permitted limit specified in Chapters 9 through 12, additional materials testing can be performed until the intended coefficient of variation is achieved. Statistical tests provided in ASTM E178 (2008) can be used to determine whether an extreme test value should be rejected as an outlier. The additional testing should be further broken up by element type (walls, beams, columns, slabs, etc.) and by floor level if a coefficient of variation is not achieved in the initial groupings.

6.2.4 Knowledge Factor

6.2.4.1 General To account for uncertainty in the collection of as-built data, a knowledge factor, κ, shall be selected from Table 6-1 considering the selected Performance Objective, analysis procedure, and data collection process. Knowledge factors shall be selected from Table 6-1 on an individual component basis as determined by the level of knowledge obtained for that component during data collection. Knowledge factors shall be applied to determine component capacities as specified in Chapter 7.

C6.2.4.1 General The knowledge factor, κ, is used to express the confidence with which the properties of the building components are known, where calculating component capacities. The value of the factor is established from the knowledge obtained based on access to original construction documents or condition assessments, including destructive or nondestructive testing of representative components. The values of the factor have been established, indicating whether the level of knowledge is "minimum," "usual," or "comprehensive."

6.2.4.2 Linear Procedures Where linear procedures are used, data collection consistent with the minimum level of knowledge shall be permitted.

6.2.4.3 Nonlinear Procedures Where nonlinear procedures are used, data collection consistent with either the usual or comprehensive levels of knowledge shall be performed. Nonlinear procedures may be used in preliminary evaluations without testing as long as the required testing is performed before implementing the retrofit. If the evaluation does not require retrofit, the testing shall be performed before finalizing the evaluation report.

C6.2.4.3 Nonlinear Procedures In some cases, the accuracy of the material properties can greatly affect the building's nonlinear response. Care should be taken when delaying testing until the end of the evaluations. Delaying the material testing until the start of the retrofit construction could result in the potential for

reevaluation or redesign of the retrofit because of differences between the assumed material properties and those determined by testing.

6.2.4.4 Assumed Values of the Knowledge Factor It shall be permitted to perform an analysis before the data collection process using an assumed value of κ, provided that the value of κ is substantiated by data collection in accordance with the requirements of Section 6.2 before implementation of the retrofit strategies.

If the assumed value of κ is not supported by subsequent data collection, the analysis shall be revised to include a revised κ consistent with the data collected in accordance with the requirements of Section 6.2.

If an analysis using an assumed value of κ results in no required retrofit of the structure, the value of κ shall be substantiated by data collection in accordance with the requirements of Section 6.2 before the analysis is finalized.

6.3 TIER 3 EVALUATION REQUIREMENTS

A Tier 3 evaluation shall consist of an analysis of an existing building performed in accordance with Chapter 7 for structural systems and Chapter 13 for nonstructural components. The scope of the structural analysis shall be in accordance with Section 7.2, based on the analysis requirements in Section 7.3 and one or more of the analysis procedures specified in Sections 7.4, using the acceptance criteria in Section 7.5. Foundation elements shall be evaluated in accordance with Chapter 8, and structural elements of the building shall be evaluated in accordance with the requirements of Chapters 9 through 12. Nonstructural elements shall be evaluated in accordance with Chapter 13. Chapter 14 shall be used where seismic damping or isolation are present in a building being evaluated.

A building meeting all provisions of these systematic evaluation procedures for a selected Performance Objective shall be deemed compliant with that Performance Objective.

C6.3 TIER 3 EVALUATION REQUIREMENTS

The Tier 3 systematic evaluation may be used as a follow-up to a deficiency-based evaluation (Tier 1 or 2) or as an initial evaluation where deficiency-based procedures are not permitted by this standard or the authority having jurisdiction or not desired to be used by the registered design professional. The Tier 3 procedure contains an evaluation and analysis of all of the components of the structure to determine compliance with the selected Performance Objective. The structural systems to be analyzed, as well as the procedures for analyzing the structural components, are specified in Section 7.2.

Refer to Section C6.4 for additional information about the Tier 3 procedure.

6.4 TIER 3 RETROFIT REQUIREMENTS

The Tier 3 retrofit procedure shall consist of an analysis of a building, including retrofit measures, to demonstrate compliance with a selected Performance Objective. Where seismic deficiencies relative to a selected Performance Objective are identified by an evaluation performed in accordance with this standard or by other approved methods, a preliminary retrofit scheme shall be developed using one or more of the retrofit strategies defined in Section 1.5.

An analysis of the building then shall be performed, including the retrofit measures, based on the procedure specified in this section. The scope of the analysis shall be in accordance with Section 7.2, based on the analysis requirements in Section 7.3 and one or more of the analysis procedures specified in Section 7.4, using the acceptance criteria in Section 7.5. The analysis and acceptance criteria shall be used for both existing elements and new elements introduced as part of the retrofit. Foundation elements shall be evaluated in accordance with Chapter 8, and structural elements of the building shall be evaluated in accordance with the requirements of Chapters 9 through 12. Nonstructural elements shall be evaluated in accordance with Chapter 13. Chapter 14 shall be used where seismic damping or isolation are used as part of the retrofit measures. The results of this analysis shall be used to verify that the retrofit design meets the selected Performance Objective.

C6.4 TIER 3 RETROFIT REQUIREMENTS

The Tier 3 systematic retrofit procedure is intended to be complete and contains all requirements to reach any specified Performance Level. Systematic retrofit is an iterative process, similar to the design of new buildings, in which modifications of the existing structure are assumed for the purposes of a preliminary design and analysis, and the results of the analysis are verified as acceptable on a component basis. If either new or existing components still prove to be inadequate, the modifications are adjusted, and, if necessary, a new analysis and verification cycle is performed. A preliminary design is needed to define the extent and configuration of corrective measures in sufficient detail to estimate the interaction of the stiffness, strength, and post-yield behavior of all new, modified, or existing components to be used for seismic force resistance. The designer is encouraged to include all components with significant lateral stiffness in a mathematical model to ensure deformation capability under realistic seismic drifts. However, just as in the design of new buildings, it may be determined that certain components will not be considered part of the seismic-force-resisting system, as long as deformation compatibility checks are made on these components to ensure their adequacy.

A mathematical model, developed for the preliminary design, must be constructed in connection with one of the analysis procedures defined in Chapter 7. These procedures are the linear procedures (linear static and linear dynamic) and the nonlinear procedures (nonlinear static and nonlinear dynamic). With the exception of the nonlinear dynamic procedure, this standard defines the analysis and retrofit design procedures sufficiently that compliance can be checked by an authority having jurisdiction in a manner similar to design reviews for new buildings. Modeling assumptions to be used in various situations are given in Chapters 8 through 12, and in Chapter 13 for nonstructural components. Requirements for seismic demand are given in Chapter 2. Requirements are specified for use of the nonlinear dynamic procedure; however, considerable judgment is required in its application. Criteria for applying ground motion for various analysis procedures is given, but definitive rules for developing ground motion input are not included in this standard.

This standard specifies acceptance criteria for stiffness, strength, and ductility characteristics of structural components for three discrete structural Performance Levels in Chapters 9 through 12 for use in the Tier 3 systematic retrofit procedure, and acceptance criteria for the performance of nonstructural components in Chapter 13.

Inherent in the concept of Performance Levels and ranges is the assumption that performance can be measured using analytical results such as story drift ratios or strength and ductility

demands on individual components. To enable structural verification at the selected performance level, stiffness, strength, and ductility characteristics of many common components have been derived from laboratory tests and analytical studies and are presented in a standard format in Chapters 8 through 12 of this standard.

This standard specifies two alternate technologies in Chapter 14: seismic isolation and energy dissipation, for use in seismic retrofit of buildings using the Tier 3 systematic retrofit procedure.

It is expected that testing of existing materials and components will continue and that additional corrective measures and products will be developed. It is also expected that systems and products intended to modify structural response beneficially will be advanced. The format of the analysis techniques and acceptance criteria of this standard allows rapid incorporation of such technology. Section 7.6 gives specific requirements in this regard. It is expected that this standard will have a significant impact on testing and documentation of existing materials and systems and on new products.

CHAPTER 7
ANALYSIS PROCEDURES AND ACCEPTANCE CRITERIA

7.1 SCOPE

This chapter sets forth requirements for analysis of buildings using either the Tier 2 deficiency-based procedures or Tier 3 systematic procedures. Section 7.2 specifies general analysis requirements for the mathematical modeling of buildings, including basic assumptions, consideration of torsion, diaphragm flexibility, P-Δ effects, soil–structure interaction (SSI), multidirectional effects, and overturning as well as analysis of diaphragms, continuity, and structural walls. Section 7.3 describes how to select one of the four analysis procedures and sets limitations on their application. Section 7.4 specifies the requirements for the four analysis procedures. Section 7.5 defines component acceptance criteria, including behavior types and capacities. Section 7.6 specifies procedures for developing alternative modeling parameters and acceptance criteria.

For Tier 2 deficiency-based procedures in Chapter 5, the analysis need only be used to determine demands, capacities, and acceptance criteria for those elements that the Tier 2 procedures designate to be evaluated.

Analysis of buildings with seismic isolation or energy dissipation systems shall comply with the requirements of Chapter 14.

C7.1 SCOPE

This chapter covers analysis for both the evaluation of an existing building and the design of retrofit measures. It describes the loading requirements, mathematical model, and detailed analytical procedures required to estimate seismic force and deformation demands on components of a building. General analysis requirements are specified in Section 7.2 for gravity loads, primary and secondary components, damping, foundation modeling, multidirectional excitation, vertical seismic effects, P-Δ effects, overturning, diaphragms, continuity of the framing system, walls, buildings sharing common components, and building separations.

The relationship of the analysis procedures described in this chapter with provisions in other chapters is as follows:

- Information on Performance Objectives, including Seismic Hazard Levels and target Building Performance Levels, is provided in Chapter 2.
- For Tier 3 systematic procedures in Chapter 6, the analysis must include the entire structural system in accordance with Section 7.2.
- Information on the calculation of appropriate stiffness and strength characteristics for components is provided in Chapters 8 through 12 and 14.
- Component force and deformation demands obtained from analysis using procedures described in this chapter, based on component acceptance criteria outlined in this chapter, are compared with permissible values provided in Chapters 8 through 12 and 14 for the desired Performance Level.
- Evaluation and retrofit methods for nonstructural components (including mechanical and electrical equipment) are presented in Chapter 13.

7.2 GENERAL ANALYSIS REQUIREMENTS

An analysis of the building shall be conducted in accordance with the requirements of this section.

7.2.1 Analysis Procedures An analysis of the building shall be performed using the linear static procedure (LSP), the linear dynamic procedure (LDP), the nonlinear static procedure (NSP), or the nonlinear dynamic procedure (NDP), selected based on the limitations specified in Section 7.3.

7.2.2 Component Gravity Loads and Load Combinations For linear procedures, the following actions caused by gravity loads, Q_G, shall be considered for combination with actions caused by seismic forces.

Where the effects or actions of gravity loads and seismic forces are additive, the action caused by gravity loads, Q_G, shall be obtained in accordance with Eq. (7-1):

$$Q_G = 1.1(Q_D + Q_L + Q_S) \tag{7-1}$$

where Q_D = Action caused by dead loads;
Q_L = Action caused by live load, equal to 25% of the unreduced live load obtained in accordance with ASCE 7 but not less than the actual live load; and
Q_S = Action caused by effective snow load.

Where the effects or actions of gravity loads and seismic forces are counteracting, the action caused by gravity loads, Q_G, shall be obtained in accordance with Eq. (7-2):

$$Q_G = 0.9Q_D \tag{7-2}$$

Where the flat roof snow load calculated in accordance with ASCE 7 exceeds 30 lb/ft^2, the effective snow load shall be taken as 20% of the calculated snow load. Where the flat roof snow load is less than 30 lb/ft^2, the effective snow load shall be permitted to be zero.

For nonlinear procedures, the following actions caused by gravity loads, Q_G, in accordance with Eq. (7-3) shall be considered for combination with actions caused by seismic forces:

$$Q_G = Q_D + Q_L + Q_S \tag{7-3}$$

where Q_D, Q_L, and Q_S are as defined for Eq. (7-1) above.

See Chapter 14 for gravity loads and load combinations for seismic isolation and energy dissipation systems.

C7.2.2 Component Gravity Loads and Load Combinations Evaluation of components for gravity loads and wind forces, in the absence of earthquake forces, is beyond the scope of this document.

7.2.3 Mathematical Modeling

7.2.3.1 Basic Assumptions A building shall be modeled, analyzed, and evaluated as a three-dimensional assembly of components. Alternatively, use of a two-dimensional model shall be permitted if the building meets one of the following conditions:

1. The building has rigid diaphragms as defined in Section 7.2.9 and torsion effects do not exceed the limits specified in Section 7.2.3.2, or torsion effects are accounted for as specified in Section 7.2.3.2; or
2. The building has flexible diaphragms as defined in Section 7.2.9.

If two-dimensional models are used, the three-dimensional nature of components and elements shall be considered when calculating stiffness and strength properties.

If the building contains out-of-plane offsets in vertical seismic-force-resisting elements, the model shall explicitly account for such offsets in the determination of diaphragm demands.

Modeling stiffness of structural components shall be based on the stiffness requirements of Chapters 8 through 12.

For nonlinear procedures, a connection shall be explicitly modeled if the connection is weaker than or has less ductility than the connected components or if the flexibility of the connection results in an increase in the relative deformations between adjacent connections of more than 10%.

C7.2.3.1 Basic Assumptions For two-dimensional models, the three-dimensional nature of components and elements should be recognized in calculating their stiffness and strength properties. For example, shear walls and other bracing systems may have "L" or "T" or other three-dimensional cross sections where contributions of both the flanges and webs should be accounted for in calculating stiffness and strength properties.

In this standard, component stiffness is generally taken as the effective stiffness based on the secant stiffness to yield level forces. Specific direction on calculating effective stiffness is provided in each material chapter for each type of structural system.

Examples of where connection flexibility may be important to model include the panel zone of steel moment-resisting frames and the "joint" region of perforated masonry or concrete walls.

7.2.3.2 Torsion The effects of torsion shall be considered in accordance with this section. Torsion need not be considered in buildings with flexible diaphragms as defined in Section 7.2.9.

C7.2.3.2 Torsion Historical observation and numerical studies have shown that torsion is a result of many factors, including torsional ground motion input to the structure, soil–structure interaction effects, variation in mass distribution, and changes in component and system stiffness and strength.

7.2.3.2.1 Total Torsional Moment The total torsional moment at a story shall be equal to the sum of the actual torsional moment and the accidental torsional moment calculated as follows:

1. The actual torsional moment at a story shall be calculated by multiplying the seismic story shear force by the eccentricity between the center of mass and the center of rigidity measured perpendicular to the direction of the applied load. The center of mass shall be based on all floors above the story under consideration. The center of rigidity of a story shall include all vertical seismic-force-resisting elements in the story.
2. The accidental torsional moment at a story shall be calculated as the seismic story shear force multiplied by a distance equal to 5% of the horizontal dimension at the given floor level measured perpendicular to the direction of the applied load.
3. When two or more Seismic Hazard Levels are evaluated using nonlinear procedures and a three-dimensional model is used, accidental torsion need only be included in the analysis for the higher hazard level.
4. Refer to Chapter 14 for accidental torsional requirements for nonlinear analysis of seismically isolated and supplementary damped structures.

C7.2.3.2.1 Total Torsional Moment The actual torsional moments determined from the building mathematical model capture eccentricity only between the centers of mass and stiffness. Accidental torsion is therefore required in the analysis to account for the additional contributing factors to torsion response that are not typically represented in the mathematical model. The accidental torsional moment in a building is a function of the mass eccentricity and variations in the stiffness and strength of the foundation and structural systems. When accidental torsion is included, the analyst may consider the explicit modeling of these characteristics or use of a parametric study to derive deformation and force amplifiers to minimize computational demands.

For nonlinear analysis procedures, three-dimensional models better capture some of the torsional contributions listed above, and so accidental torsion need not always be explicitly included in the assessment. The provisions permit accidental torsion to be omitted for lower Seismic Hazard Levels where multiple hazard levels are being considered. Based on judgment, torsional effects may be omitted for the lower hazard level because the higher hazard is more sensitive to torsion. Accidental torsion is required to be included for the highest hazard level, including single Performance Objectives because this level is more likely to be the Collapse Prevention Performance Level, in which case there may be significant changes in building response and evaluation outcome because of the impact of accidental torsion.

7.2.3.2.2 Consideration of Torsional Effects Effects of torsion shall be considered in accordance with the following requirements:

1. Increased forces and displacements caused by actual torsion shall be calculated for all buildings.
2. The torsional amplification multiplier for displacements, η, for each level x shall be calculated as the ratio of the maximum displacement at any point on the level x diaphragm to the average displacement $\eta = \delta_{max}/\delta_{avg}$. Displacements shall be calculated for the applied forces.
3. Increased forces and displacements caused by accidental torsion need not be considered if either of the following conditions apply: (a) the accidental torsional moment is less than 25% of the actual torsional moment, or (b) the ratio of the displacement multiplier η caused by the actual plus accidental torsion and the displacement multiplier caused by actual torsion is less than 1.1 at every floor.
4. For linear analysis procedures, forces and displacements caused by accidental torsion shall be amplified by a factor, A_x, as defined by Eq. (7-4), where the displacement multiplier η caused by actual plus accidental torsion exceeds 1.2 at any level.

$$A_x = \left(\frac{\eta}{1.2}\right)^2 \leq 3.0 \qquad (7\text{-}4)$$

5. If the displacement multiplier η caused by actual plus accidental torsion at any level exceeds 1.5, two-dimensional models shall not be permitted and three-dimensional models that account for the spatial distribution of mass and stiffness shall be used.
6. Where two-dimensional models are used, the effects of torsion shall be calculated as follows:
   6.1. For the LSP and the LDP, forces and displacements shall be amplified by the maximum value of η calculated for the building;
   6.2. For the NSP, the target displacement shall be amplified by the maximum value of η calculated for the building;
   6.3. For the NDP, the amplitude of the ground acceleration record shall be amplified by the maximum value of η calculated for the building;
7. For dynamic analyses using nonlinear three-dimensional models, it shall be permitted to establish amplification (η) factors using a parametric study that captures the effects of accidental torsion on individual forces, drifts, and deformations. These factors may then be applied to center-of-mass analysis results to envelop all of the mass-eccentric cases.
8. The effects of accidental torsion shall not be used to reduce force and deformation demands on components.

C7.2.3.2.2 Consideration of Torsional Effects The limiting ratio of displacement multipliers of 1.1 is based on judgment. The intent is to reward those building frames that are torsionally redundant and possess high torsional stiffness and strength. Such structures are likely to be much less susceptible to torsional response than those framing systems possessing low redundancy and low torsional stiffness and strength.

Addressing accidental torsion is frequently one of the most computationally demanding aspects of analysis because it multiplies by four the number of analyses required. It is also frequently cited by practicing engineers as the least valuable type of analysis relative to the information obtained about the probable performance of the building. This problem becomes especially burdensome when additional multipliers on the number of analyses exist, such as upper- and lower-bound foundation properties or upper- and lower-bound energy dissipation or seismic isolation device properties.

The provisions were designed to permit the evaluating engineer to envelop the effects of accidental torsion using factors established from a sensitivity study. This study is typically performed once the analysis model is largely complete and debugged but before final analysis runs are commenced. Three-dimensional analyses using nominal foundation and element properties would be performed for all four accidental torsion cases and the center-of-mass case. Amplification factors could be established to permit center-of-mass cases to be factored up to envelop the results of all accidental torsion cases. Drift and displacement results typically have the largest amplification factors, so these results should be established first. Member forces and deformations could then be factored up based on the derived upper-bound multiplier.

The exception here is when torsion may amplify an incipient nonlinear mechanism that is not dominant in the center-of-mass analysis. Examples include sudden degradation of one frame or wall, or perhaps more progressive behaviors, such as frame or wall uplift. If the sensitivity study indicates that certain analysis results are sensitive to accidental torsion, then extra care should be taken to ensure that appropriate amplification factors are established or that the full suite of three-dimensional analyses with accidental torsion is performed.

The amplification factors are likely not to be established using the final analysis model because it is desirable to establish them relatively early in the analysis process. Therefore, some judgment is required regarding whether the analysis model used to establish the amplification factors is sufficiently representative of the final model. If significant changes have occurred between the torsion sensitivity study model and the final analysis model, then the torsion sensitivity model should be updated.

The number of amplification factors established may range from one to many. The largest factor is typically based on drifts or displacements for the worst-case accidental plus actual torsion case, unless a nonlinear, torsionally sensitive behavior is present as discussed above. The number of additional factors established is at the discretion of the engineer. Different factors may be established for different portions of the building (e.g., frame lines) or for different response quantities (e.g., displacement, drift, or member axial load).

The more amplification factors that are established, the closer the enveloping process will be to matching the results of the enveloped set of accidental torsion analysis cases. Establishing too many factors may risk making the evaluation process more complex than simply running all the accidental torsion analysis cases. Some judgment is required in this regard.

7.2.3.3 Primary and Secondary Components Components shall be classified as primary or secondary as defined in Section 7.5.1.1. Primary components shall be evaluated for earthquake-induced forces and deformations in combination with gravity load effects. Secondary components shall be evaluated for earthquake-induced deformations in combination with gravity load effects.

Mathematical models for use with linear analysis procedures shall include the stiffness and resistance of only the primary components. If the total initial lateral stiffness of secondary components in a building exceeds 25% of the total initial lateral stiffness of primary components, some secondary components shall be reclassified as primary to reduce the total stiffness of secondary components to less than 25% of the primary components. If the inclusion of a secondary component increases the force or deformation demands on a primary component, the secondary component shall be reclassified as primary and included in the model.

Mathematical models for use with nonlinear procedures shall include the stiffness and resistance of primary and secondary components. The strength and stiffness degradation of primary and secondary components shall be modeled explicitly.

Nonstructural components shall be classified as structural components and shall be included in mathematical models if their lateral stiffness or strength exceeds 10% of the total initial lateral stiffness or expected strength of a story, respectively.

Components shall not be selectively designated primary or secondary to change the configuration of a building from irregular to regular.

C7.2.3.3 Primary and Secondary Components Because of limitations inherent in each analysis method, the manner in which primary and secondary components are handled differs for linear and nonlinear procedures. Because strength and stiffness degradation of secondary components is likely, their resistance is unreliable. Linear procedures cannot account for this degradation, so only primary components are included in linear analysis models. This method is conservative in linear analyses because it results in the highest demands being placed on

the components that remain primary. Secondary components, however, must still be checked against the acceptance criteria given in Chapters 9 through 12.

In nonlinear procedures, strength and stiffness degradation can be modeled. Because degradation of the overall system can increase displacement demands, inclusion of both primary and secondary components provides a more accurate assessment in nonlinear analyses.

For linear procedures, this standard limits the amount of lateral resistance that can be provided by secondary components. The main reason for this limitation is to minimize the potential for sudden loss of seismic-force-resisting components to produce irregular structural response that is difficult to evaluate reliably. The contribution of secondary components can be checked by temporarily including them in the analysis model and examining the change in response.

7.2.3.4 Stiffness and Strength Assumptions Stiffness and strength properties of components shall be determined in accordance with the requirements of Chapters 8 through 12 and 14.

7.2.3.5 Foundation Modeling The foundation system shall be modeled considering the degree of fixity provided at the base of the structure. Rigid or flexible base assumptions shall be permitted in accordance with the requirements for soil–structure interaction in Section 7.2.7 and foundation acceptability in Section 8.4. Foundation modeling shall consider movement caused by geologic site hazards specified in Section 8.2.2 and load-deformation characteristics specified in Section 8.4.

C7.2.3.5 Foundation Modeling Methods for modeling foundations, including flexibility and estimation of ground movements caused by seismic geologic site hazards, are referenced in Chapter 8 and may require the expertise of a geotechnical engineer or a geologist.

The person who decides to model foundation flexibility must consider impacts on the behavior of structural components in the building. Rigid base models for concrete shear walls on independent spread footings may maximize deformation demands on the walls themselves but could underestimate the demands on other secondary components in the building, such as beams and columns in moment frames, which may be sensitive to additional building movement.

7.2.3.6 Damping For linear static, linear dynamic, and nonlinear static procedures, 5% damped response spectra shall be used for the analysis of all buildings except those meeting the following criteria:

1. For buildings without exterior cladding, an effective viscous damping ratio, β, equal to 2% of critical damping ($\beta = 0.02$) shall be assumed;
2. For buildings with wood diaphragms and cross walls that interconnect the diaphragm levels at a maximum spacing of 40 ft on center transverse to the direction of motion, an effective viscous damping ratio, β, equal to 10% of critical damping ($\beta = 0.10$) shall be permitted;
3. For buildings using seismic isolation technology or enhanced energy dissipation technology, an equivalent effective viscous damping ratio, β, shall be calculated using the procedures specified in Chapter 14; or
4. There is sufficient analysis or test data based on the specific characteristics of the building to substantiate the use of a damping ratio other than 5% ($\beta = 0.05$).

Damping of the building system shall be implemented in the analysis procedure in accordance with the requirements of Sections 7.4.1.4 and 7.4.2.4 for linear procedures, Section 7.4.3.4 for the nonlinear static procedure, and as augmented by soil–structure interaction per Section 8.5.2.

For the nonlinear dynamic procedure, the target elastic effective viscous damping ratio shall not exceed 3% ($\beta = 0.03$), except for buildings meeting any of the follow criteria:

1. For buildings without exterior cladding, the target effective elastic viscous damping ratio shall not exceed 1% ($\beta = 0.01$).
2. Higher target elastic effective viscous damping ratios shall be permitted if substantiated through analysis or test data.

Damping for the building system shall be implemented in the nonlinear dynamic analysis procedure in accordance with the requirements of Section 7.4.4.4.

For buildings using seismic isolation technology or enhanced energy dissipation technology, the effects of added viscous damping shall be incorporated directly in the nonlinear dynamic analysis in accordance with the procedures specified in Chapter 14.

C7.2.3.6 Damping The damping provisions differentiate between the NDP and the linear or nonlinear static procedures. The lower damping limits associated with the NDP relative to the linear and nonlinear static procedures account for the explicit modeling of hysteretic damping in the analysis. Further guidance on the selection of appropriate levels of equivalent viscous damping is provided in NIST (2010c) and PEER/ATC (2010).

7.2.4 Configuration Building irregularities defined in Section 7.3.1.1 shall be based on the plan and vertical configuration of the existing building for an evaluation or retrofit. Irregularities shall be determined, both with and without the contribution of secondary components.

C7.2.4 Configuration One objective of seismic retrofit should be the improvement of the regularity of a building through the judicious placement of new framing elements.

Adding seismic framing elements at certain locations improves the regularity of the building and should be considered as a means to improve seismic performance of the building.

Secondary components can lose significant strength and stiffness after initial earthquake shaking and may no longer be effective. Therefore, regularity of the building should be determined both with and without the contribution of secondary components.

7.2.5 Multidirectional Seismic Effects Buildings shall be evaluated or retrofitted to address seismic motion in any horizontal direction. Multidirectional seismic effects shall be considered to act concurrently, as specified in Section 7.2.5.1, for buildings meeting one of the following criteria:

1. The building has plan irregularities as defined in Section 7.3.1.1; or
2. The building has one or more primary columns that form a part of two or more intersecting frame or braced frame elements.

All other buildings shall be permitted to be evaluated or retrofitted for seismic motions acting nonconcurrently in the direction of each principal axis of the building.

7.2.5.1 Concurrent Seismic Effects Where concurrent multidirectional seismic effects must be considered, horizontally oriented, orthogonal *X*- and *Y*-axes shall be established. Components of the building shall be evaluated or retrofitted for combinations

of forces and deformations from separate analyses performed for ground motions in X and Y directions as follows:

1. Where the LSP or LDP is used as the basis for analysis, elements and components shall be analyzed for (a) forces and deformations associated with 100% of the forces in the X direction plus the forces and deformations associated with 30% of the forces in the Y direction; and for (b) forces and deformations associated with 100% of the forces in the Y direction plus the forces and deformations associated with 30% of the forces in the X direction. Other combination rules shall be permitted where verified by experiment or analysis; and
2. Where the NSP is used as the basis for analysis, elements and components of the building shall be analyzed for (a) forces and deformations associated with 100% of the target displacement in the X direction only, plus the forces (not deformations) associated with 30% of the displacements in the Y direction only; and for (b) forces and deformations associated with 100% of the displacements in the Y direction only, plus the forces (not deformations) associated with 30% of the displacements in the X direction only. Forces and deformations shall be determined in accordance with Section 7.4.3 for the NSP.

   Alternatively, it shall be permitted to determine the forces and deformations associated with 100% of the displacements in any single direction that generates the maximum deformation and component action demands. Further concurrent seismic effects need not be considered in the critical direction(s). Other combination rules shall also be permitted where verified by experiment or analysis; and
3. Where the NDP is used as the basis for analysis with a two-dimensional model, elements and components of the building shall be evaluated for forces and deformations associated with the application of ground motions scaled by the maximum value of η calculated for the building. Forces and deformations shall be determined in accordance with Section 7.4.4 for the NDP; and
4. Where the NDP is used as the basis for analysis with a three-dimensional model, elements and components of the building shall be analyzed for forces and deformations associated with the application of the suite of ground motions in a random orientation when the site is located more than 3 mi (5 km) from an active fault. Additional rotation of the ground motion pairs need not be considered. For near-field sites located at or within 3 mi (5 km) of an active fault, the fault-normal components shall be applied to the building model with respect to the orientation of the governing fault and the principal axes of the building. Where the Basic Performance Objective Equivalent to New Building Standards (BPON) has been selected, the components shall also be rotated by 90 degrees, the analysis repeated, and the average results from each rotation enveloped for the purposes of evaluation. In this circumstance, the maximum number of record pairs selected for analysis may be reduced from 10 to 7. Forces and deformations shall be determined in accordance with Section 7.4.4 for the NDP. Table 7-1 summarizes the number of ground motion acceleration history records required for near- and far-field sites based on the selected performance objective.

C7.2.5.1 Concurrent Seismic Effects The hazard information is consistent with ASCE 7 for depicting the maximum direction of response. This depiction permits alternate means of addressing bidirectional loading than have historically been the case. For consistency, the traditional 100% plus 30% combinations are included in items 1 and 2. For item 2, the NSP, an additional technique is permitted that may be simpler to implement than the traditional 100% plus 30% combinations.

The alternate technique is simply to apply the pushover load vector in the critical direction, the direction of maximum response, for the component being evaluated. For components of typical orthogonal frame buildings, this technique amounts to pushing to 100% of the target displacement applied separately along each frame axis. For nonorthogonal frames, additional pushover cases would be applied with the load vector aligned along the direction of each frame.

For bidirectional components, e.g., columns or foundations loaded by orthogonal frames, a vector direction must be estimated that is the critical direction of loading. For the simple example of the corner columns in a square doubly symmetric perimeter frame building, the appropriate additional load vector directions would be at 45 degrees to both frames. If the frames were nonorthogonal, then the appropriate load vector might be one that bisects the two frames. If the frames are of substantially different stiffness or strength, then this difference may need to be reflected in the direction of application of the pushover load vector. Unless the difference is significant, the results are unlikely to be sensitive to the vector direction of the pushover load vector; this difference should be verified by parameter study.

If the site is in the near field, then there may be different spectra in the fault-normal and fault-parallel directions. If target displacements are calculated in different vector directions, then technically the appropriate spectrum should be computed based on the pushover application angle relative to the local fault-normal and fault-parallel axes. The same situation also exists for the 100% plus 30% combinations. If the fault-normal to fault-parallel ratio is close to unity, then it may be simpler to calculate everything conservatively using the larger fault-normal spectrum.

Table 7-1. Summary of Required Number of Ground Motion Acceleration History Records and Analysis Cases for NDP

Condition	Method of Computing Results	Basic Performance Objective Equivalent to New Building Standards (BPON)	All Other Performance Objectives
Far-field (>5 km/3 mi)	Average	Record pairs ≥ 10 no rotation[a]	Record pairs ≥ 10 no rotation[a]
Far-field (>5 km/3 mi)	Maximum	3 ≤ Record pairs ≤ 9 no rotation[a]	3 ≤ Record pairs ≤ 9 no rotation[a]
Near-field (≤5 km/3 mi)	Average	Record pairs ≥ 7 with rotation[b]	Record pairs ≥ 10 no rotation[a]
Near-field (≤5 km/3 mi)	Maximum	3 ≤ Record pairs ≤ 6 with rotation[b]	3 ≤ Record pairs ≤ 9 no rotation[a]

[a]Record pairs are applied in a random orientation. Additional rotation of the ground motion pairs need not be considered. Therefore, the number of analysis cases required is the same as the number of record pairs used.
[b]Record pairs are applied to the model with the fault-normal component aligned with respect to the orientation of the governing fault and the principal axes of the building. The components shall also be rotated by 90 degrees, the analysis repeated, and the average results from each rotation enveloped for the purposes of evaluation. Therefore, the number of analysis cases required is twice the number of record pairs used.

A suggested method for determining the appropriate value of η for different component response parameters in different parts of the building is suggested in Section 7.2.3.2.2.

The requirement for a "random" orientation in the far field is meant to achieve approximately equal input spectra along each orthogonal building axis. This result can be achieved in several ways: by randomizing the input angles, or by arbitrarily orienting one half of either the fault-normal or the stronger components in one direction and one half in the orthogonal direction. The components should be randomized even if spectral matching techniques are used.

Appropriate record application in the analysis model is more complex in the near field. The components already have been rotated to fault-normal and fault-parallel relative to their governing fault as part of the selection and scaling process. For the amplitude scaling technique, this technique usually results in the fault-normal components being higher than the fault-parallel components, although the ratio varies significantly with period. If spectral matching techniques have been used and different fault-normal and fault-parallel spectra were developed, then the average spectrum of each set of components closely matches the target.

The records should be applied to the model with fault-normal components aligned appropriately relative to the nearby fault that dominates the hazard. Additional considerations and measures may be required if there are multiple nearby faults that contribute significantly to the site hazard, especially if these faults are not relatively parallel to one another.

7.2.5.2 Vertical Seismic Effects The effects of the vertical response of a building to earthquake ground motion shall be considered for any of the following cases:

1. Horizontal cantilever components of buildings that provide gravity load support;
2. Horizontal prestressed components of buildings; and
3. Building components, excluding foundations, in which demands caused by gravity loads specified in Section 7.2.2 exceed 80% of the nominal capacity of the component.

For components requiring consideration of vertical seismic effects, the vertical response of a structure to earthquake ground motion need not be combined with the effects of the horizontal response.

7.2.6 P-Δ Effects P-Δ effects shall be included in linear and nonlinear analysis procedures. For nonlinear procedures, static P-Δ effects shall be incorporated in the analysis by including in the mathematical model the nonlinear force–deformation relationship of all components subjected to axial forces.

C7.2.6 P-Δ Effects Static P-Δ effects are caused by gravity loads acting through the deformed configuration of a building and result in an increase in lateral displacements.

Dynamic P-Δ effects are caused by a negative post-yield stiffness that increases story drift and the target displacement. The degree by which dynamic P-Δ effects increase displacements depends on the following:

1. The ratio of the negative post-yield stiffness to the effective elastic stiffness;
2. The fundamental period of the building;
3. The strength ratio, $\mu_{strength}$;
4. The hysteretic load-deformation relations for each story;
5. The frequency characteristics of the ground motion; and
6. The duration of the strong ground motion.

Because of the number of parameters involved, it is difficult to capture dynamic P-Δ effects in linear and nonlinear static analysis procedures. For the NSP, dynamic instability is measured by the strength ratio, $\mu_{strength}$. For the NDP, dynamic P-Δ effects are captured explicitly in the analysis.

7.2.7 Soil–Structure Interaction The effects of soil–structure interaction (SSI) shall be evaluated for those buildings in which an increase in fundamental period caused by SSI effects results in an increase in spectral accelerations. For other buildings, the effects of SSI need not be evaluated.

SSI effects shall be calculated using the explicit modeling procedure of Section 7.2.7.2 or other approved rational procedures. Where the LSP is used, the simplified procedure of Section 7.2.7.1 shall be permitted.

C7.2.7 Soil–Structure Interaction Interaction between the structure and the supporting soil consists of the following:

1. Foundation flexibility—introduction of flexibility and strength at the foundation–soil interface;
2. Kinematic effects—filtering of the ground motions transmitted to the structure based on the geometry and properties of the foundation; and
3. Foundation damping effects—dissipation of energy through radiation and hysteretic soil damping.

Consideration of soil–structure interaction (SSI) effects caused by kinematic interaction or foundation damping, which serve to reduce the shaking input to the structure relative to the free-field motion, is covered in Section 8.5.

SSI may modify the seismic demands on a building. It can reduce or increase spectral accelerations and seismic forces, but it can also increase lateral displacements and secondary forces caused by P-Δ effects. Changes in seismic demand caused by explicit modeling of foundation flexibility, foundation damping, or kinematic effects can be significant and should be used where applicable. Where SSI effects are not required to be evaluated, use of all three effects alone or in combination is permitted.

For those rare cases (such as near-field and soft-soil sites) in which the increase in period caused by SSI increases spectral accelerations, the effects of SSI on building response must be evaluated. Further discussion of SSI effects can be found in FEMA 440 (2005).

7.2.7.1 Simplified Procedure for Soil–Structure Interaction Calculation of soil–structure interaction effects using the simplified procedure shall comply with the procedure in Chapter 19 of ASCE 7, using the effective fundamental period and effective fundamental damping ratio of the foundation–structure system. Combination of these effects with kinematic interaction effects calculated in accordance with Section 8.5.1 shall be permitted.

7.2.7.2 Explicit Modeling Procedure for Soil–Structure Interaction Calculation of SSI effects using the explicit modeling procedure shall be based on a mathematical model that includes the flexibility and damping of individual foundation components. Foundation stiffness parameters shall comply with the requirements of Section 8.4. Damping ratios for individual foundation components shall not exceed the value used for the elastic superstructure. In lieu of explicitly modeling damping, use of the effective damping ratio of the structure–foundation system, β_0, calculated in accordance with Section 8.5.2, shall be permitted.

For the NSP, the effective damping ratio of the foundation–structure system, β_0, calculated in accordance with Section 8.5.2, shall be used to modify spectral demands.

Combination of damping effects with kinematic interaction effects calculated in accordance with Section 8.5.1 shall be permitted.

7.2.8 Overturning Buildings shall be evaluated or retrofitted to resist overturning effects caused by seismic forces. Each vertical-force-resisting element receiving earthquake forces caused by overturning shall be investigated for the cumulative effects of seismic forces applied at and above the level under consideration. The effects of overturning shall be evaluated at each level of the structure as specified in Section 7.2.8.1 for linear procedures and Section 7.2.8.2 for nonlinear procedures. The effects of overturning on foundations and geotechnical components shall be considered in the evaluation or retrofit of foundation regarding strengths and stiffnesses as specified in Chapter 8.

C7.2.8 Overturning Response to earthquake ground motion results in a tendency for buildings and individual vertical elements of buildings to overturn about their bases. Although actual overturning failure is rare, overturning effects can result in significant stresses, as demonstrated in some local and global failures. In new building design, earthquake effects, including overturning, are evaluated for seismic forces that are significantly reduced (by an *R*-factor) from those that may actually develop.

For elements with positive attachment between levels that behave as single units, such as reinforced concrete walls, the overturning effects are resolved into component forces (e.g., flexure and shear at each level and at the bases of the walls). For linear procedures, the element is then proportioned with adequate strength using *m*-factors, where appropriate, to resist overturning effects resulting from these force levels.

Some elements, such as wood shear walls, may not have positive attachments between levels. An overturning stability check is typically performed for such elements when buildings are designed using codes for new buildings. If the element has sufficient dead load to remain stable under the overturning effects of the design seismic forces and has sufficient shear connection to the level below, then the design is deemed adequate. However, if dead load is inadequate to provide stability, then tie-downs or other types of uplift anchors are provided to resist the residual overturning caused by the design forces.

In the linear and nonlinear procedures of this standard, seismic forces are not reduced by an *R*-factor, as they are for new buildings, so computed overturning effects are larger than those typically calculated for new buildings. Although the procedure used for new buildings is not completely rational, it has resulted in successful performance. Therefore, it may not be appropriate to require that structures and elements of structures remain stable for the pseudo seismic forces used in the linear procedures in this standard. Instead, the analysis must determine if positive direct attachment is used to resist overturning effects or if dead loads are used. If positive direct attachment is used, then the overturning effect at this attachment is treated just as any other component action.

However, if dead loads alone are used to resist overturning, then overturning is treated as a force-controlled behavior. The expected overturning demands can be estimated by considering the overall limiting strengths of the components.

There is no simple rational method available shown to be consistent with observed behavior to evaluate or retrofit elements for overturning effects. The method described in this standard is rational but inconsistent with procedures used for new buildings. To ensure damage control, the full seismic forces used in the linear procedures of this standard are required for checking acceptability for Performance Levels higher than Life Safety.

7.2.8.1 Overturning Effects for Linear Procedures Where linear procedures are used, overturning effects shall be resisted through the stabilizing effect of dead loads acting alone or in combination with positive connections of structural components to components below the level under consideration.

Where dead loads alone are used to resist the effects of overturning, Eq. (7-5) shall be satisfied:

$$M_{ST} > M_{OT}/(C_1 C_2 J) \tag{7-5}$$

where M_{OT} = Total overturning moment induced on the element by seismic forces applied at and above the level under consideration. Overturning moment shall be determined based on seismic forces calculated in accordance with Section 7.4.1 for LSP and 7.4.2 for LDP;

M_{ST} = Stabilizing moment produced by dead loads acting on the element;

C_1 and C_2 = Coefficients defined in Section 7.4.1.3.1; and

J = A coefficient defined in Section 7.5.2.1.2.

The quantity $M_{OT}/(C_1 C_2 J)$ need not exceed the overturning moment on the element, as limited by the expected strength of the structure. The element shall be evaluated for the effects of increased compression at the end about which it is being overturned. For this purpose, compression at the end of the element shall be considered a force-controlled action.

Alternatively, the load combination represented by Eq. (7-6) shall be permitted for evaluating the adequacy of dead loads alone to resist the effects of overturning.

$$0.9 M_{ST} > M_{OT}/(C_1 C_2 \mu_{OT}) \tag{7-6}$$

where μ_{OT} = 10.0 for Collapse Prevention;
= 8.0 for Life Safety; and
= 4.0 for Immediate Occupancy.

Where Eq. (7-5) or (7-6) for dead load stability against the effects of overturning is not satisfied, positive attachment between elements of the structure at and immediately above and below the level under consideration shall be provided. Positive attachments shall be capable of resisting earthquake forces in combination with gravity loads as deformation- or force-controlled actions in accordance with Eq. (7-34) or (7-35) and applicable acceptance criteria of Eq. (7-36) or (7-37), respectively.

C7.2.8.1 Overturning Effects for Linear Procedures For evaluating whether dead loads provide stability against overturning, the alternative procedure of Section 7.2.8.1 is intended to provide a method that is consistent with prevailing practice specified in current codes for new buildings.

7.2.8.2 Overturning Effects for Nonlinear Procedures Where nonlinear procedures are used, the effects of earthquake-induced uplift on the tension side of an element shall be included in the analytical model as a nonlinear degree of freedom. The adequacy of elements above and below the level at which uplift occurs shall be evaluated for any redistribution of forces or deformations that occurs as a result of this uplift.

7.2.9 Diaphragms, Chords, Collectors, and Ties Diaphragms shall be defined as horizontal elements that transfer earthquake-induced inertial forces to vertical elements of the seismic-force-resisting systems through the collective action of diaphragm components including chords, collectors, and ties.

Diaphragms shall be provided at each level of the structure as necessary to connect building masses to the primary vertical elements of the seismic-force-resisting system. The analytical model of the building shall account for the behavior of the diaphragms as specified in this section.

Diaphragms and their connections to vertical elements providing lateral support shall comply with the requirements specified in Section 9.8 for metal diaphragms, Section 10.10 for concrete diaphragms, Section 10.11 for precast concrete diaphragms, and Section 12.5 for wood diaphragms.

C7.2.9 Diaphragms, Chords, Collectors, and Ties The concept of a diaphragm chord, consisting of an edge member provided to resist diaphragm flexural stresses through direct axial tension or compression, is not familiar to many engineers. Buildings with solid structural walls on all sides often do not require diaphragm chords. However, buildings with highly perforated perimeter walls do require these components for proper diaphragm behavior. This section of this standard requires that these components be provided where appropriate.

A common problem in buildings that nominally have robust seismic-force-resisting systems is a lack of adequate attachment between the diaphragms and the vertical elements of the seismic-force-resisting system to effect shear transfer. This lack of shear transfer is particularly a problem in buildings that have discrete walls or frames as their vertical seismic-force-resisting elements. This section provides a reminder that it is necessary to detail a formal system of force delivery from the diaphragm to the walls and frames.

Diaphragms that support heavy perimeter walls have occasionally failed because of tension induced by out-of-plane forces generated in the walls. This section is intended to ensure that sufficient tensile ties are provided across diaphragms to prevent such failures. The force for these tensile ties, taken as $0.4S_{XS}$ times the weight, is an extension of provisions contained in the *1994 Uniform Building Code* (ICBO 1994). In that code, parts and portions of structures are designed for a force calculated as C_p/Z times the weight of the component, with typical values of C_p being 0.75 and Z being the effective peak ground acceleration for which the building is designed. The 1994 *Uniform Building Code* provisions (ICBO 1994) use an allowable stress basis. This standard uses a strength basis. Therefore, a factor of 1.4 was applied to the C_p value, and a factor of 1/(2.5) was applied to adjust the Z value to an equivalent S_{XS} value, resulting in a coefficient of 0.4.

For flexible diaphragms, evaluation of diaphragm demands should be based on the likely distribution of horizontal inertial forces. For flexible diaphragms, such a distribution may be given by Eq. (C7-1) and is illustrated in Fig. C7-1.

$$f_d = \frac{1.5F_d}{L_d}\left[1-\left(\frac{2x}{L_d}\right)^2\right] \qquad \text{(C7-1)}$$

where f_d = Inertial load per foot;
F_d = Total inertial load on a flexible diaphragm;
x = Distance from the center line of the flexible diaphragm; and
L_d = Distance between lateral support points for the diaphragm.

7.2.9.1 Classification of Diaphragms Diaphragms shall be classified as flexible where the maximum horizontal deformation of the diaphragm along its length is more than twice the average story drift of the vertical seismic-force-resisting elements of the story immediately below the diaphragm.

Diaphragms shall be classified as rigid where the maximum lateral deformation of the diaphragm is less than half the average story drift of the vertical seismic-force-resisting elements of the story immediately below the diaphragm.

Diaphragms that are neither flexible nor rigid shall be classified as stiff.

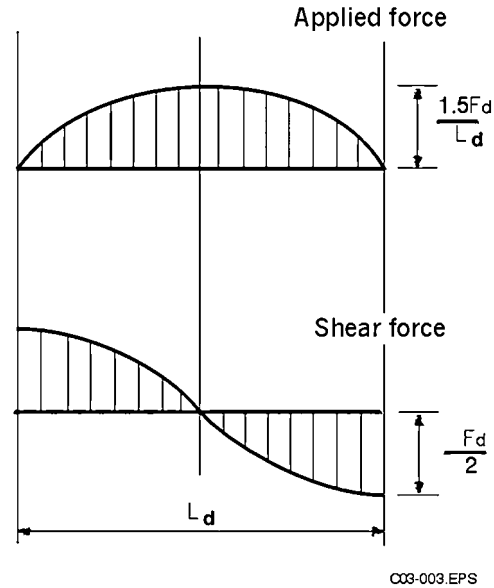

FIG. C7-1. Plausible Force Distribution in a Flexible Diaphragm

For the purpose of classifying diaphragms, story drift and diaphragm deformations shall be calculated using the pseudo seismic force specified in Eq. (7-21). The in-plane deflection of the diaphragm shall be calculated for an in-plane distribution of seismic force consistent with the distribution of mass and all in-plane seismic forces associated with offsets in the vertical seismic framing at that diaphragm level.

7.2.9.2 Mathematical Modeling Mathematical modeling of buildings with rigid diaphragms shall account for the effects of torsion as specified in Section 7.2.3.2. Mathematical models of buildings with stiff or flexible diaphragms shall account for the effects of diaphragm flexibility by modeling the diaphragm as an element with in-plane stiffness consistent with the structural characteristics of the diaphragm system. Alternatively, for buildings with flexible diaphragms at each level, each seismic-force-resisting element in a vertical plane shall be permitted to be evaluated independently, with seismic masses assigned on the basis of tributary area.

7.2.9.3 Diaphragm Chords Except for diaphragms considered as unchorded, as specified in Chapter 12, a boundary component shall be provided at each diaphragm edge (either at the perimeter or at an opening) to resist tension or compression resulting from the diaphragm moment. This boundary component shall be a continuous diaphragm chord; a continuous component of a wall or frame element; or a continuous combination of wall, frame, and chord components. The boundary components shall be evaluated or retrofitted to transfer accumulated seismic forces at the diaphragm boundaries. At reentrant corners in diaphragms and at the corners of openings in diaphragms, diaphragm chords shall be extended distances sufficient to develop the accumulated diaphragm boundary forces into the diaphragm beyond the corners.

7.2.9.4 Diaphragm Collectors At each vertical element of the seismic-force-resisting system, a diaphragm collector shall be provided to transfer to the element accumulated diaphragm forces that are in excess of the forces transferred directly to the element in shear. The diaphragm collector shall be extended beyond the element and attached to the diaphragm to transfer the accumulated forces.

7.2.9.5 Diaphragm Ties Diaphragms shall be provided with continuous tension ties between chords or boundaries. At a minimum, ties shall be evaluated or retrofitted for axial tension as a force-controlled action calculated using Eq. (7-7).

$$F_p = 0.4 S_{XS} W \tag{7-7}$$

where F_p = Axial tensile force for the evaluation or retrofit of ties between the diaphragm and chords or boundaries;
S_{XS} = Spectral response acceleration parameter at short periods for the selected hazard level and damping, adjusted for site class; and
W = Weight tributary to that portion of the diaphragm extending half the distance to each adjacent tie or diaphragm boundary.

Where diaphragms of timber, gypsum, or metal deck construction provide lateral support for walls of masonry or concrete construction, ties shall be evaluated or retrofitted for the wall anchorage forces specified in Section 7.2.11 for the area of wall tributary to the diaphragm tie.

7.2.10 Continuity All structural components shall be tied together to form a complete load path for the transfer of inertial forces generated by the dynamic response of portions of the structure to the rest of the structure. Actions resulting from the forces specified in this section shall be considered force controlled.

1. Smaller portions of a building, such as outstanding wings, shall be connected to the structure as a whole. Component connections shall be capable of resisting, in any direction, the horizontal force calculated using Eq. (7-8). These connections are not required if the individual portions of the structure are self-supporting and are separated by a seismic joint permitting independent movement during dynamic response in accordance with Section 7.2.13.

$$F_p = 0.133 S_{XS} W \tag{7-8}$$

where F_p = Horizontal seismic force in any direction for the analysis of connections between two components of a building;
S_{XS} = Spectral response acceleration parameter at short periods for the selected Seismic Hazard Level and damping, adjusted for site class; and
W = Weight of the smaller portion of the building.

2. A positive connection for resisting horizontal force acting parallel to the member shall be provided for each beam, girder, or truss to its support. The connection shall have a minimum strength of 5% of the dead load and live load reaction.
3. Where a sliding support is provided at the end of a component, the bearing length shall be sufficient to accommodate the expected differential displacement between the component and the support.

C.7.2.10 Continuity A continuous structural system with adequately interconnected elements is one of the most important prerequisites for acceptable seismic performance. The requirements of this section are similar to parallel provisions contained in ASCE 7 and FEMA P-750 (2009c).

7.2.11 Structural Walls and Their Anchorage Walls shall be evaluated or retrofitted for out-of-plane inertial forces as required by this section and as further required for specific structural systems in Chapters 9 through 12. Actions that result from application of the forces specified in this section shall be considered force controlled. Nonstructural walls shall be evaluated using the provisions of Chapter 13.

7.2.11.1 Out-of-Plane Wall Anchorage to Diaphragms Each wall shall be positively anchored to all diaphragms that provide lateral support for the wall or are vertically supported by the wall. Walls shall be anchored to diaphragms at horizontal distances not exceeding 8 ft, unless it can be demonstrated that the wall has adequate capacity to span horizontally between the supports for greater distances. Anchorage of walls to diaphragms shall be evaluated or retrofitted for forces calculated using Eq. (7-9), which shall be developed into the diaphragm. If subdiaphragms are used, each subdiaphragm shall be capable of transmitting the shear forces caused by wall anchorage to a continuous diaphragm tie. Subdiaphragms shall have length-to-depth ratios not exceeding 3:1. Where wall panels are stiffened for out-of-plane behavior by pilasters or similar components, anchors shall be provided at each such component and the distribution of out-of-plane forces to wall anchors and diaphragm ties shall consider the stiffening effect and accumulation of forces at these components.

$$F_p = 0.4 S_{XS} k_a k_h \chi W_p \tag{7-9}$$

$$F_{p,\min} = 0.2 k_a \chi W_p \tag{7-10}$$

$$k_a = 1.0 + \frac{L_f}{100} \tag{7-11}$$

$$k_h = \frac{1}{3}\left(1 + \frac{2 z_a}{h_n}\right) \tag{7-12}$$

where F_p = Seismic force for anchorage of walls to diaphragms;
k_a = Factor to account for diaphragm flexibility, equal to 1.0 for rigid diaphragms and need not exceed 2.0 for flexible diaphragms;
L_f = The span, in feet, of a flexible diaphragm that provides the lateral support for the wall between vertical primary seismic-force-resisting elements that provide lateral support to the diaphragm in the direction considered;
k_h = Factor to account for variation in force over the height of the building when all diaphragms are rigid—for flexible diaphragms, use 1.0;
z_a = The height, in feet, of the wall anchor above the base of the structure, not to exceed h_n;
h_n = height, in feet, above the base to the roof level;
χ = Factor for calculation of out-of-plane wall forces, from Table 7-2, for the selected Structural Performance Level;
S_{XS} = Spectral response acceleration parameter at short periods for the selected hazard level and damping, adjusted for site class, without any adjustment for soil–structure interaction; and
W_p = Weight of the wall tributary to the wall anchor.

7.2.11.2 Out-of-Plane Strength of Walls Wall components shall have adequate strength to span between locations of out-

Table 7-2. Factor χ for Calculation of Out-of-Plane Wall Forces

Structural Performance Level	χ
Collapse Prevention	1.0
Life Safety	1.3
Immediate Occupancy	2.0

of-plane support when subjected to out-of-plane forces calculated using Eq. (7-13), but not less than forces calculated using Eq. (7-14):

$$F_p = 0.4 S_{XS} \chi W_p \quad (7\text{-}13)$$

$$F_{p,\min} = 0.1 \chi W_p \quad (7\text{-}14)$$

where F_p = Out-of-plane force per unit area for the analysis of a wall spanning between two out-of-plane supports;
χ = Factor for calculating out-of-plane wall forces, from Table 7-2, for the selected performance level;
S_{XS} = Spectral response acceleration at short periods for the selected hazard level and damping, adjusted for site class, without any adjustment for soil–structure interaction; and
W = Weight of the wall per unit area.

C7.2.11.2 Out-of-Plane Strength of Walls Application of these requirements for unreinforced masonry walls and infills is further defined in Chapter 11.

7.2.12 Structures Sharing Common Elements Buildings sharing common vertical- or seismic-force-resisting elements shall be evaluated or retrofitted considering interconnection of the two structures, or they shall be separated as specified in this section.

7.2.12.1 Interconnection Buildings that share common elements, other than foundation elements, shall be thoroughly tied together so that they behave as an integral unit. Ties between the structures at each level shall be evaluated or retrofitted for the forces specified in Section 7.2.10. Analyses of the combined response of the buildings shall account for the interconnection of the structures and shall evaluate the structures as one integral unit.

If the shared common elements are foundation elements and the superstructures meet the separation requirements of Section 7.2.13, the structures need not be tied together. Shared foundation elements shall be evaluated or retrofitted considering an analysis of the combined response of the two buildings.

7.2.12.2 Separation Buildings that share common elements shall be completely separated by introducing seismic joints between the structures meeting the requirements of Section 7.2.13. Independent seismic-force-resisting systems shall be provided for each structure. Independent vertical support shall be provided on each side of the seismic joint, unless slide bearings are used and adequate bearing lengths are provided to accommodate the expected independent lateral movement of each structure. It shall be assumed for such purposes that the structures move out-of-phase with each other in opposite directions simultaneously. The shared elements shall be either completely removed or anchored to one of the structures in accordance with the applicable requirements of Section 7.2.10.

7.2.13 Building Separation

7.2.13.1 Minimum Separation Buildings shall be separated from adjacent structures to prevent pounding by a minimum distance s_i at any level i given by Eq. (7-15), unless they are exempted as specified in Section 7.2.13.2.

$$s_i = \sqrt{\Delta_{i1}^2 + \Delta_{i2}^2} \quad (7\text{-}15)$$

where Δ_{i1} = Lateral deflection of building 1 under consideration, at level i, relative to the ground, calculated in accordance with the provisions of this standard for the selected Seismic Hazard Level; and
Δ_{i2} = Lateral deflection of an adjacent building 2, at level i, relative to the ground, estimated using the provisions of this standard for the selected Seismic Hazard Level or other approved approximate procedure. Alternatively, it shall be permitted to assume that $\Delta_{i2} = 0.03h_i$ for any structure in lieu of a more detailed analysis, where h_i is the height of level i above the base of building 2.

The value of s_i need not exceed 0.04 times the height of the level under consideration above the base of building 1 at the location of potential impact.

Refer to Chapter 14 for building separation requirements for seismically isolated structures.

7.2.13.2 Separation Exceptions For Structural Performance Levels of Life Safety or lower, buildings adjacent to structures that have diaphragms located at the same elevation and differ in height by less than 50% of the height of the shorter building need not meet the minimum separation distance specified in Section 7.2.13.1.

Where an approved analysis procedure that accounts for the change in dynamic response of the structures caused by impact is used, the evaluated and retrofitted buildings need not meet the minimum separation distance specified in Section 7.2.13.1. Such an analysis shall demonstrate that

1. The structures are capable of transferring forces resulting from impact for diaphragms located at the same elevation; or
2. The structures are capable of resisting all required vertical and lateral forces considering the loss of any elements or components damaged by impact of the structures.

C7.2.13.2 Separation Exceptions This standard permits retrofitted buildings to experience pounding as long as the effects are adequately considered by analysis methods that account for the transfer of momentum and energy between the structures as they impact.

Approximate methods of accounting for these effects can be obtained by performing nonlinear response history analyses of both structures (Johnson et al. 1992). Approximate elastic methods for evaluating these effects have also been developed and are presented in the literature (Kasai et al. 1990).

Buildings that are likely to experience significant pounding should not be considered capable of meeting Enhanced Performance Objectives. This limit is so because significant local crushing of components is likely to occur at points of impact. Furthermore, the nature of the impact is such that high-frequency shocks can be transmitted through the structures and can potentially be damaging to architectural components and mechanical and electrical systems. Such damage is not consistent with the performance expected of buildings evaluated or retrofitted to meet Enhanced Performance Objectives.

7.2.14 Verification of Analysis Assumptions Each component shall be evaluated to verify that locations of inelastic deformations assumed in the analysis are consistent with strength and equilibrium requirements along the component length. Each component shall also be evaluated for postearthquake residual gravity load capacity by a rational analysis procedure approved by the authority having jurisdiction that accounts for potential redistribution of gravity loads and reduction of strength or stiffness caused by earthquake damage to the structure.

C7.2.14 Verification of Analysis Assumptions It is important that assumptions about locations of potential inelastic activity in the structure be verified. In linear procedures, the potential for inelastic flexural action is restricted to the beam ends because

flexural yielding along the span length can lead to unconservative results. In nonlinear procedures, potential inelastic activity should occur only where specifically modeled. Where demands caused by gravity load combinations of Section 7.2.2 exceed 50% of the capacity of the component at any location along its length, the potential for inelastic activity exists and should be investigated. Sample procedures for verifying analysis assumptions are contained in Section C3.2.9 of FEMA 274 (1997b).

7.3 ANALYSIS PROCEDURE SELECTION

An analysis of the building, including retrofit measures, shall be conducted to determine the forces and deformations induced in components of the building by ground motion corresponding to the selected Seismic Hazard Level, or by other seismic geologic site hazards specified in Section 8.2.2.

The analysis procedure shall comply with one of the following:

1. Linear analysis subject to limitations specified in Section 7.3.1 and complying with the linear static procedure (LSP) in accordance with Section 7.4.1 or the linear dynamic procedure (LDP) in accordance with Section 7.4.2.
2. Nonlinear analysis subject to limitations specified in Section 7.3.2 and complying with the nonlinear static procedure (NSP) in accordance with Section 7.4.3 or the nonlinear dynamic procedure (NDP) in accordance with Section 7.4.4.
3. Alternative rational analysis in accordance with Section 7.3.3.

The analysis results shall comply with the applicable acceptance criteria selected in accordance with Section 7.5.

C7.3 ANALYSIS PROCEDURE SELECTION

Static procedures are appropriate where higher mode effects are not significant. This is generally true for short, regular buildings. Dynamic procedures are required for tall buildings and for buildings with torsional irregularities or nonorthogonal systems.

The NSP is acceptable for most buildings but should be used in conjunction with the LDP if mass participation in the first mode is low.

The term "linear" in linear analysis procedures implies "linearly elastic." The analysis procedure, however, may include geometric nonlinearity of gravity loads acting through lateral displacements and implicit material nonlinearity of concrete and masonry components using properties of cracked sections. The term "nonlinear" in nonlinear analysis procedures implies explicit material nonlinearity or inelastic material response, but geometric nonlinearity may also be included.

The linear procedures maintain the traditional use of a linear stress–strain relationship but incorporate adjustments to overall building deformations and material acceptance criteria to permit better consideration of the probable nonlinear characteristics of seismic response. The nonlinear static procedure (NSP), often called "pushover analysis," uses simplified nonlinear techniques to estimate seismic structural deformations. The nonlinear dynamic procedure (NDP), also known as nonlinear response history analysis, requires considerable judgment and experience to perform, as described in Commentary Section C7.3.2.2.

7.3.1 Linear Procedures Linear procedures shall be permitted for buildings that do not have an irregularity defined in Section 7.3.1.1. For buildings that have one or more of the irregularities defined in Section 7.3.1.1.3 or 7.3.1.1.4, linear procedures shall not be used unless the earthquake demands on the building comply with the demand–capacity ratio (DCR) requirements in Section 7.3.1.1. For buildings incorporating base isolation systems or supplemental energy dissipation systems, the additional limitations of Section 14.2.4 or Section 14.3.4 shall apply.

C7.3.1 Linear Procedures The results of the linear procedures can be very inaccurate when applied to buildings with highly irregular structural systems, unless the building is capable of responding to the selected Seismic Hazard Level in a nearly elastic manner. The procedures of Section 7.3.1.1 are intended to evaluate whether the building is capable of nearly elastic response.

7.3.1.1 Method to Determine Limitations on Use of Linear Procedures The method presented in this section shall be used to determine the applicability of linear analysis procedures based on four configurations of irregularity defined in Section 7.3.1.1.1 through Section 7.3.1.1.4. The determination of irregularity shall be based on the configuration of the original or retrofit structure. A linear analysis to determine irregularity shall be performed by either an LSP in accordance with Section 7.4.1 or an LDP in accordance with Section 7.4.2. The results of this analysis shall be used to identify the magnitude and uniformity of distribution of inelastic demands on the primary elements and components of the seismic-force-resisting system.

The magnitude and distribution of inelastic demands for existing and added primary elements and components shall be defined by demand–capacity ratios (DCRs) and computed in accordance with Eq. (7-16):

$$\mathrm{DCR} = \frac{Q_{UD}}{Q_{CE}} \tag{7-16}$$

where Q_{UD} = Force caused by gravity loads and earthquake forces calculated in accordance with Section 7.5.2; and

Q_{CE} = Expected strength of the component or element, calculated as specified in Chapters 8 through 13.

DCRs shall be calculated for each action (such as axial force, moment, or shear) of each primary component. The critical action for the component shall be the one with the largest DCR. The DCR for this action shall be termed the critical component DCR. The largest DCR for any element at a particular story is termed the critical element DCR at that story. If an element at a particular story contains multiple components, then the component with the largest computed DCR shall define the critical component for the element at that story.

If a component DCR exceeds the lesser of 3.0 and the *m*-factor for the component action and any irregularity described in Section 7.3.1.1.3 or Section 7.3.1.1.4 is present, then linear procedures are not applicable and shall not be used.

C7.3.1.1 Method to Determine Limitations on Use of Linear Procedures The magnitude and distribution of inelastic demands are indicated by demand–capacity ratios (DCRs). These DCRs are not used to determine the acceptability of component behavior. The adequacy of structural components must be evaluated using the procedures contained in this chapter along with the acceptance criteria provided in Chapters 8 through 12. DCRs are used only to determine a structure's potential for inelastic response and irregularity. It should be noted that for complex structures, such as buildings with perforated shear walls, it may be easier to use one of the nonlinear procedures than to ensure that the building has sufficient regularity to permit use of linear procedures.

If all of the computed controlling DCRs for a component are less than or equal to 1.0, then the component is expected to

respond elastically to the earthquake ground shaking being evaluated. If one or more of the computed DCRs for a component are greater than 1.0, then the component is expected to respond inelastically to the earthquake ground shaking.

7.3.1.1.1 In-Plane Discontinuity Irregularity An in-plane discontinuity irregularity shall be considered to exist in any primary element of the seismic-force-resisting system wherever a seismic-force-resisting element is present in one story but does not continue, or is offset within the plane of the element, in the story immediately below. Figure 7-1 depicts such a condition.

7.3.1.1.2 Out-of-Plane Discontinuity Irregularity An out-of-plane discontinuity irregularity shall be considered to exist in any primary element of the seismic-force-resisting system where an element in one story is offset out-of-plane relative to that element in an adjacent story, as depicted in Fig. 7-2.

7.3.1.1.3 Weak Story Irregularity A weak story irregularity shall be considered to exist in any direction of the building if the ratio of the average shear DCR for elements in any story to that of an adjacent story in the same direction exceeds 125%. The average DCR of a story shall be calculated by Eq. (7-17):

$$\overline{\mathrm{DCR}} = \frac{\sum_{1}^{n} \mathrm{DCR}_i V_i}{\sum_{1}^{n} V_i} \tag{7-17}$$

where $\overline{\mathrm{DCR}}$ = Average DCR for elements in the story;
DCR_i = Critical action DCR for element i of the story;
V_i = Total calculated lateral shear force in an element i caused by earthquake response, assuming that the structure remains elastic; and
n = Total number of elements in the story.

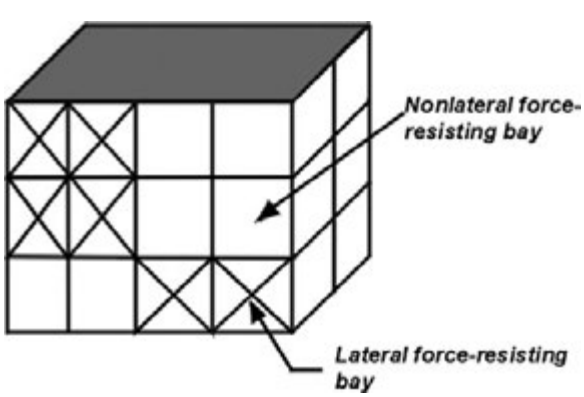

FIG. 7-1. In-Plane Discontinuity in a Seismic-Force-Resisting System

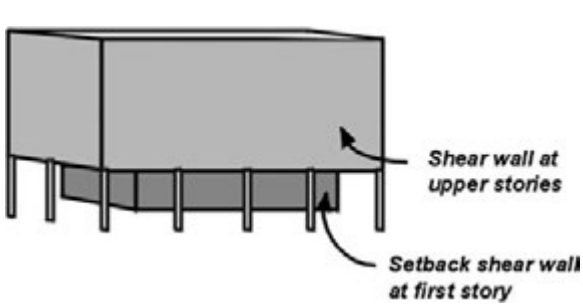

FIG. 7-2. Typical Building with Out-of-Plane Offset Irregularity

For buildings with flexible diaphragms, each line of framing shall be independently evaluated.

7.3.1.1.4 Torsional Strength Irregularity A torsional strength irregularity shall be considered to exist in any story if the diaphragm above the story under consideration is not flexible and, for a given direction, the ratio of the critical element DCR for primary elements on one side of the center of resistance of a story to the critical element DCR on the other side of the center of resistance of the story exceeds 1.5.

7.3.1.2 Limitations on Use of the Linear Static Procedure Where Section 7.3.1.1 permits the use of linear procedures, the linear static procedure shall not be used for a building with one or more of the following characteristics:

1. The fundamental period of the building, T, is greater than or equal to 3.5 times T_s.
2. The ratio of the horizontal dimension at any story to the corresponding dimension at an adjacent story exceeds 1.4 (excluding penthouses).
3. The building has a torsional stiffness irregularity in any story. A torsional stiffness irregularity exists in a story if the diaphragm above the story under consideration is not flexible and the results of the analysis indicate that the drift along any side of the structure is more than 150% of the average story drift.
4. The building has a vertical stiffness irregularity. A vertical stiffness irregularity exists where the average drift in any story (except penthouses) is more than 150% of that of the story above or below.
5. The building has a nonorthogonal seismic-force-resisting system.

C7.3.1.2 Limitations on Use of the Linear Static Procedure For buildings that have long periods, major setbacks, torsional or vertical stiffness irregularities, or nonorthogonal seismic-force-resisting systems, the distribution of demands predicted by an LDP analysis are more accurate than those predicted by the LSP. Either the response spectrum method or response history method may be used for evaluation of such structures.

7.3.2 Nonlinear Procedures Nonlinear procedures shall be permitted for all buildings. Nonlinear procedures shall be used for analysis of buildings where linear procedures are not permitted. Data collection for use with nonlinear procedures shall be in accordance with Section 6.2.

7.3.2.1 Nonlinear Static Procedure (NSP) The NSP shall be permitted for structures with all of the following characteristics:

1. The strength ratio $\mu_{strength}$, calculated in accordance with Eq. (7-31), is less than μ_{max} calculated in accordance with Eq. (7-32). If $\mu_{strength}$ exceeds μ_{max}, an NDP analysis shall be performed.
2. Higher mode effects are not significant, as defined below:
   To determine if higher modes are significant, a modal response spectrum analysis shall be performed for the structure using sufficient modes to produce 90% mass participation. A second response spectrum analysis shall also be performed, considering only the first mode participation. Higher mode effects shall be considered significant if the shear in any story resulting from the modal analysis considering modes required to obtain 90% mass participation exceeds 130% of the corresponding story shear considering only the first mode response. It shall be permitted to use the soil–structure interaction modifications of

Section 8.5 to demonstrate compliance with this requirement, without requiring a site-specific hazard assessment.

If higher mode effects are significant, the NSP shall be permitted if an LDP analysis is also performed to supplement the NSP. Buildings with significant higher mode effects must meet the acceptance criteria of this standard for both analysis procedures, except that an increase by a factor of 1.33 shall be permitted in the LDP acceptance criteria for deformation-controlled actions (*m*-factors) provided in Chapters 8 through 12. A building analyzed using the NSP, with or without a supplementary LDP evaluation, shall meet the acceptance criteria for nonlinear procedures specified in Section 7.5.3.

C7.3.2.1 Nonlinear Static Procedure (NSP) The NSP is generally a more reliable approach to characterizing the performance of a structure than are linear procedures. However, it is not exact and cannot accurately account for changes in dynamic response as the structure degrades in stiffness; nor can it account for higher mode effects in multidegree of freedom (MDOF) systems. Where the NSP is used on a structure that has significant higher mode response, the LDP is also used to verify the adequacy of the evaluation or retrofit. Where this approach is taken, less-restrictive criteria are permitted for the LDP because it is recognized that improved knowledge is obtained by performing both analysis procedures.

The strength ratio, $\mu_{strength}$, is a measure of the extent of nonlinearity, and μ_{max} is a measure of the system degradation. Structures that experience nonlinear demands exceeding μ_{max} have significant degradation, and an NDP is required to confirm the dynamic stability of the building.

7.3.2.2 Nonlinear Dynamic Procedure (NDP) The NDP shall be permitted for all structures. Where the NDP procedure is used, the authority having jurisdiction shall consider the requirement of review and approval by an independent third-party engineer with experience in seismic design and nonlinear procedures.

C7.3.2.2 Nonlinear Dynamic Procedure (NDP) The NDP consists of nonlinear response history analysis, a sophisticated approach to examining the inelastic demands produced on a structure by a specific suite of ground motion acceleration histories. As with the NSP, the results of the NDP can be directly compared with test data on the behavior of representative structural components to identify the structure's probable performance when subjected to a specific ground motion. Potentially, the NDP can be more accurate than the NSP in that it avoids some of the approximations made in the more simplified analysis. Response history analysis automatically accounts for higher mode effects and shifts in inertial load patterns as structural softening occurs. In addition, for a given earthquake record, this approach directly solves for the maximum global displacement demand produced by the earthquake on the structure, eliminating the need to estimate this demand based on general relationships.

Despite these advantages, the NDP requires considerable judgment and experience to perform. These analyses can be highly sensitive to small changes in assumptions with regard to either the character of the ground motion record used in the analysis or the nonlinear stiffness behavior of the elements. As an example, two ground motion records enveloped by the same response spectrum can produce radically different results with regard to the distribution and amount of inelasticity predicted in the structure. To apply this approach reliably to evaluation or retrofit, it is necessary to perform a number of such analyses, using varied assumptions. The sensitivity of the analysis results to the assumptions incorporated is the principal reason why this method should be used only on projects where the engineer is thoroughly familiar with nonlinear dynamic analysis techniques and limitations.

7.3.3 Alternative Rational Analysis Use of an approved alternative analysis procedure that is rational and based on fundamental principles of engineering mechanics and dynamics shall be permitted. Such alternative analyses shall not adopt the acceptance criteria contained in this standard without first determining their applicability. All projects using alternative rational analysis procedures shall be reviewed and approved by an independent third-party engineer with experience in seismic design.

7.4 ANALYSIS PROCEDURES

Selection of an appropriate analysis procedure shall comply with Section 7.2.1.

7.4.1 Linear Static Procedure (LSP)

7.4.1.1 Basis of the Procedure If the LSP is selected for seismic analysis of the building, the seismic forces, their distribution over the height of the building, and the corresponding internal forces and system displacements shall be determined using a linearly elastic, static analysis in accordance with this section.

The pseudo seismic force defined in Section 7.4.1.3 shall be used to calculate internal forces and system displacements at the selected Seismic Hazard Level.

Results of the LSP shall be checked using the acceptance criteria of Section 7.5.2.

C7.4.1.1 Basis of the Procedure The magnitude of the pseudo seismic force has been selected with the intention that, when applied to the linearly elastic model of the building, it results in displacement amplitudes approximating maximum displacements expected during the selected Seismic Hazard Level. The procedure is keyed to the displacement response of the building because displacements are a better indicator of damage in the nonlinear range of building response than are forces. In this range, relatively small changes in force demand correspond to large changes in displacement demand. If the building responds essentially elastically to the selected Seismic Hazard Level, the calculated internal forces are reasonable approximations of those expected during the selected Seismic Hazard Level. If the building responds inelastically to the selected Seismic Hazard Level, as is commonly the case, the actual internal forces that would develop in the building are less than the internal forces calculated using a pseudo seismic force.

Calculated internal forces typically exceed those that the building can develop because of anticipated inelastic response of components. These forces are evaluated through the acceptance criteria of Section 7.5.2, which include modification factors and alternative analysis procedures to account for anticipated inelastic response demands and capacities.

7.4.1.2 Period Determination for LSP The fundamental period of a building shall be calculated for the direction of response under consideration using one of the following analytical, empirical, or approximate methods specified in this section.

7.4.1.2.1 Method 1—Analytical Eigenvalue (dynamic) analysis of the mathematical model of the building shall be performed to determine the fundamental period of the building.

C7.4.1.2.1 Method 1—Analytical For many buildings, including multi-story buildings with well defined framing systems, the

preferred approach to obtaining the period for analysis is Method 1. By this method, the building is modeled using the modeling procedures of Chapters 8 through 13, and the period is obtained by eigenvalue analysis. The effective stiffnesses, not gross section properties, of components should be used for period determination. Flexible diaphragms may be modeled as a series of lumped masses and diaphragm finite elements.

Contrary to procedures in codes for new buildings, there is no maximum limit on period calculated using Method 1. This omission is intended to encourage the use of more advanced analyses. It is felt that sufficient controls on analyses and acceptance criteria are present within this standard to provide appropriately conservative results using calculated periods.

7.4.1.2.2 Method 2—Empirical The fundamental period of the building shall be determined in accordance with Eq. (7-18):

$$T = C_t h_n^{\beta} \tag{7-18}$$

where T = Fundamental period (in seconds) in the direction under consideration;
C_t = 0.035 for steel moment-resisting frame systems;
= 0.018 for concrete moment-resisting frame systems;
= 0.030 for steel eccentrically braced frame systems;
= 0.020 for all other framing systems;
h_n = Height (in feet) above the base to the roof level; and
β = 0.80 for steel moment-resisting frame systems;
= 0.90 for concrete moment-resisting frame systems; and
= 0.75 for all other framing systems.

C7.4.1.2.2 Method 2—Empirical Empirical equations for period, such as that used in Method 2, intentionally underestimate the actual period and generally results in conservative estimates of pseudo seismic force. Studies have shown that, depending on actual mass or stiffness distributions in a building, the results of Method 2 may differ significantly from those of Method 1.

7.4.1.2.3 Method 3—Approximate The use of any of the following approximate methods may be permitted:

1. For any building, use of Rayleigh's method or any other rational method to approximate the fundamental period shall be permitted.
2. For one-story buildings with single-span flexible diaphragms, use of Eq. (7-19) to approximate the fundamental period shall be permitted.

$$T = (0.1\Delta_w + 0.078\Delta_d)^{0.5} \tag{7-19}$$

where Δ_w and Δ_d are in-plane wall and diaphragm displacements in inches because of a lateral force in the direction under consideration equal to the weight tributary to the diaphragm.

3. For one-story buildings with multiple-span diaphragms, use of Eq. (7-19) shall be permitted as follows: a lateral force equal to the weight tributary to the diaphragm span under consideration shall be applied to calculate a separate period for each diaphragm span. The period that maximizes the pseudo seismic force shall be used for analysis of all walls and diaphragm spans in the building.
4. For unreinforced masonry buildings with single-span flexible diaphragms six stories or fewer high, use of Eq. (7-20) to approximate the fundamental period shall be permitted.

$$T = (0.078\Delta_d)^{0.5} \tag{7-20}$$

where Δ_d is the maximum in-plane diaphragm displacement in inches because of a lateral force in the direction under consideration equal to the weight tributary to the diaphragm.

C7.4.1.2.3 Method 3—Approximate Rayleigh's method for approximating the fundamental period of vibration of a building is presented in Eq. (C7-2). The equation uses the shape function given by the static deflections of each floor caused by the applied lateral forces.

$$T = 2\pi\left[\frac{\sum_{i=1}^{n} w_i\delta_i^2}{g\sum_{i=1}^{n} F_i\delta_i}\right]^{1/2} \tag{C7-2}$$

where w_i = Portion of the effective seismic weight located on or assigned to level i;
δ_i = Displacement at floor i caused by lateral force F_i;
F_i = Lateral force applied at level i; and
n = Total number of stories in the vertical seismic framing above the base.

Eqs. 7-19 and 7-20 of Method 3 are appropriate for systems with rigid vertical elements and flexible diaphragms in which the dynamic response of the system is concentrated in the diaphragm. Use of Method 2 on these systems to calculate the period based on the stiffness of the vertical elements substantially underestimates the period of actual dynamic response and overestimates the pseudo seismic force.

Eq. (7-20) is a special case developed specifically for unreinforced masonry (URM) buildings. In this method, wall deformations are assumed to be negligible compared with diaphragm deflections. Wilson et al. (2011) provide guidelines on diaphragm flexibility and propose a modified stiffness that can be considered for period determination of URM buildings.

For illustration of wall and diaphragm displacements, see Fig. C7-2. Where calculating diaphragm displacements for the purpose of estimating period using Eq. (7-19) or (7-20), the diaphragm shall be considered to remain elastic under the prescribed lateral forces.

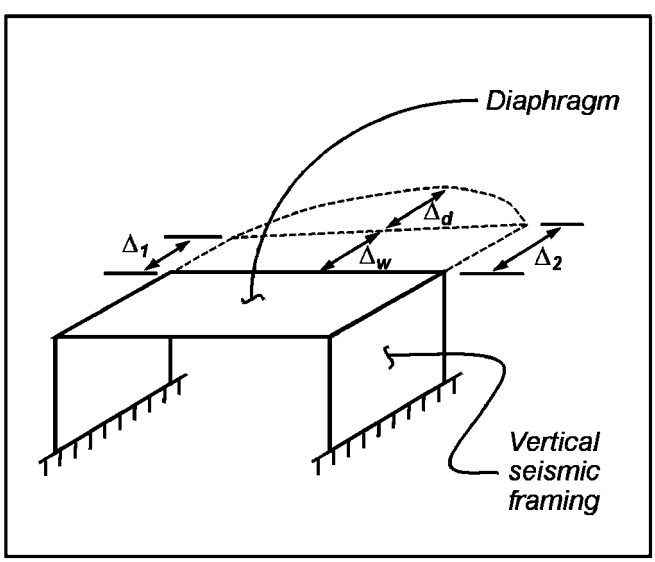

FIG. C7-2. Diaphragm and Wall Displacement Terminology

7.4.1.3 Determination of Forces and Deformations for LSP Forces and deformations in elements and components shall be calculated for the pseudo seismic force of Section 7.4.1.3.1, using component stiffnesses calculated in accordance with Chapters 8 through 12. Pseudo seismic forces shall be distributed throughout the building in accordance with Sections 7.4.1.3.2 through 7.4.1.3.4. Alternatively, for unreinforced masonry buildings in which the fundamental period is calculated using Eq. (7-20), pseudo seismic forces shall be permitted to be distributed in accordance with Section 7.4.1.3.5. Actions and deformations shall be modified to consider the effects of torsion in accordance with Section 7.2.3.2.

7.4.1.3.1 Pseudo Seismic Force for LSP The pseudo lateral force in a given horizontal direction of a building shall be determined using Eq. (7-21). This force shall be used to evaluate or retrofit the vertical elements of the seismic-force-resisting system.

$$V = C_1 C_2 C_m S_a W \tag{7-21}$$

where V = Pseudo lateral force; and

C_1 = Modification factor to relate expected maximum inelastic displacements to displacements calculated for linear elastic response. For fundamental periods less than 0.2 s, C_1 need not be taken as greater than the value at $T = 0.2$ s. For fundamental periods greater than 1.0 s, $C_1 = 1.0$.

$$C_1 = 1 + \frac{\mu_{\text{strength}} - 1}{aT^2} \tag{7-22}$$

where a = Site class factor;
= 130 site Class A or B;
= 90 site Class C;
= 60 site Class D, E, or F;

μ_{strength} = Ratio of elastic strength demand to yield strength coefficient calculated in accordance with Eq. (7-31) with the elastic base shear capacity substituted for shear yield strength, V_y;

T = Fundamental period of the building in the direction under consideration, calculated in accordance with Section 7.4.1.2, including modification for SSI effects of Section 7.2.7, if applicable;

C_2 = Modification factor to represent the effect of pinched hysteresis shape, cyclic stiffness degradation, and strength deterioration on maximum displacement response. For fundamental periods greater than 0.7 s, $C_2 = 1.0$.

$$C_2 = 1 + \frac{1}{800}\left(\frac{\mu_{\text{strength}} - 1}{T}\right)^2 \tag{7-23}$$

Alternately, it shall be permitted to use C_1C_2 per Table 7-3, where $m_{\max}$ is the largest m-factor for all primary elements of the building in the direction under consideration.

C_m = Effective mass factor to account for higher modal mass participation effects obtained from Table 7-4.

C_m shall be taken as 1.0 if the fundamental period, T, is greater than 1.0 s;

S_a = response spectrum acceleration, at the fundamental period and damping ratio of the building in the direction under consideration. The value of S_a shall be obtained from the procedure specified in Section 2.4; and

W = effective seismic weight of the building, including the total dead load and applicable portions of other gravity loads listed below:

1. In areas used for storage, a minimum 25% of the floor live load shall be applicable. The live load shall be permitted to be reduced for tributary area as approved by the authority having jurisdiction. Floor live load in public garages and open parking structures is not applicable.
2. Where an allowance for partition load is included in the floor load design, the actual partition weight or a minimum weight of 10 lb/in.^{2} of floor area, whichever is greater, shall be applicable.
3. Total operating weight of permanent equipment.
4. Where the flat roof snow load calculated in accordance with ASCE 7 exceeds 30 lb/ft^2, the effective snow load shall be taken as 20% of the snow load. Where the flat roof snow load is less than 30 lb/ft^2, the effective snow load shall be permitted to be zero.

C7.4.1.3.1 Pseudo Lateral Force for LSP **Coefficient C_1.** This modification factor is used to account for the difference in maximum elastic and inelastic displacement amplitudes in structures with relatively stable and full hysteretic loops. The values of the coefficient are based on analytical and experimental investigations of the earthquake response of yielding structures. The quantity μ_{strength} is the ratio of the required elastic strength to the yield strength of the structure. Alternatively, μ_{strength} may be considered using:

$$\mu_{\text{strength}} = \frac{\text{DCR}_{\max}}{1.5} C_m \geq 1.0 \tag{C7-3}$$

where $\text{DCR}_{\max}$ is the largest DCR computed for any primary component of a building in the direction of response under consideration, taking $C_1 = C_2 = C_m = 1.0$.

The expression above is obtained by substituting Eq. (7-17) into Eq. (7-31) and assuming that the elastic base shear capacity (fully yielded strength, V_y) is mobilized at a shear that is 1.5 times the shear at first yield (as indicated by the largest primary component DCR). The latter assumption is based on representative values for system overstrength. As is indicated in Fig. C12.1-1 of FEMA P-750 (2009c), the factor relating force level to fully

Table 7-3. Alternate Values for Modification Factors C_1C_2

Fundamental Period	$m_{\max} < 2$	$2 \leq m_{\max} < 6$	$m_{\max} \geq 6$
$T \leq 0.3$	1.1	1.4	1.8
$0.3 < T \leq 1.0$	1.0	1.1	1.2
$T > 1.0$	1.0	1.0	1.1

Table 7-4. Values for Effective Mass Factor C_m

No. of Stories	Concrete Moment Frame	Concrete Shear Wall	Concrete Pier-Spandrel	Steel Moment Frame	Steel Concentrically Braced Frame	Steel Eccentrically Braced Frame	Other
1–2	1.0	1.0	1.0	1.0	1.0	1.0	1.0
3 or more	0.9	0.8	0.8	0.9	0.9	0.9	1.0

NOTE: C_m shall be taken as 1.0 if the fundamental period, T, in the direction of response under consideration is greater than 1.0 s.

yielded strength is Ω_0. Sources of overstrength are design ϕ factors, expected material properties in excess of nominal material properties, and global system response. Because this standard prescribes use of $\phi = 1$ and expected material properties, the only additional source of overstrength is global system response. Using representative values for these contributions to overstrength ($\Omega_0 = 2.5$, $\phi = 0.75$, and expected/nominal = 1.25), the factor relating shear at first yield to elastic base shear capacity is 1.5. Additional commentary regarding this coefficient is provided in C7.4.3.3.2.

Coefficient C_2. This coefficient adjusts pseudo lateral force values based on component hysteresis characteristics, cyclic stiffness degradation, and strength deterioration. For buildings with systems that do not exhibit degradation of stiffness and/or strength, the C_2 coefficient can be assumed to be 1.0. This situation would include buildings with modern concrete or steel special moment-resisting frames, steel eccentrically braced frames, and buckling-restrained braced frames as either the original system or the system added during seismic retrofit. See Section C7.4.3.3.2, FEMA 274 (1997b), and FEMA 440 (2005) for additional discussion.

Simplified C_1C_2 Table. As an alternative to the iterative process of calculating DCR, C_1, and C_2, Table 7-3 is provided. The table is based on the equations for C_1 and C_2, assuming Site Class D. The intent of the table is to provide a simplified way to select an appropriate C_1C_2 based on the building's period and the expected ductility demand based on the maximum m-factor that is permitted for all the primary seismic-force-resisting system elements.

Coefficient C_m. The effective mass factor was developed to reduce the conservatism of the LSP for buildings where higher mode mass participation reduces seismic forces up to 20% depending on building type. See FEMA 357 (2000h), Appendix E, for more information on the development of C_m.

7.4.1.3.2 Vertical Distribution of Seismic Forces for LSP The vertical distribution of the pseudo lateral force shall be as specified in this section for all buildings except unreinforced masonry buildings with flexible diaphragms and seismically isolated structures, for which the pseudo lateral force shall be permitted to be distributed in accordance with Section 7.4.1.3.5 and Section 14.2.4.4.4, respectively. The seismic force F_x applied at any floor level x shall be determined in accordance with Eqs. 7-24 and 7-25:

$$F_x = C_{vx}V \tag{7-24}$$

$$C_{vx} = \frac{w_x h_x^k}{\sum_{i=1}^{n} w_i h_i^k} \tag{7-25}$$

where C_{vx} = Vertical distribution factor;
k = 2.0 for $T \geq 2.5$ s;
= 1.0 for $T \leq 0.5$ s (linear interpolation shall be used to calculate values of k for intermediate values of T);
V = Pseudo lateral force from Eq. (7-21);
w_i = Portion of the effective seismic weight W located on or assigned to level i;
w_x = Portion of the effective seismic weight W located on or assigned to level x;
h_i = Height from the base to level i; and
h_x = height from the base to level x.

7.4.1.3.3 Horizontal Distribution of Seismic Forces for LSP The seismic forces at each floor level of the building calculated using Eq. (7-24) shall be distributed according to the distribution of mass at that floor level.

7.4.1.3.4 Diaphragm Forces for LSP Diaphragms shall be evaluated or retrofitted to resist the combined effects of the lateral inertial force, F_{px}, calculated in accordance with Eq. (7-26), and horizontal forces resulting from offsets in, or changes in the stiffness of, the vertical seismic framing elements above and below the diaphragm. Actions resulting from offsets in or changes in the stiffness of the vertical seismic framing elements shall be taken as force controlled, unless smaller forces are justified by other rational analysis, and shall be added directly to the diaphragm inertial forces.

$$F_{px} = \frac{\sum_{i=x}^{n} F_i}{\sum_{i=x}^{n} w_i} w_x \tag{7-26}$$

where F_{px} = Diaphragm inertial force at level x;
F_i = Lateral inertial force applied at level i given by Eq. (7-24);
w_i = Portion of the effective seismic weight W located on or assigned to floor level i; and
w_x = Portion of the effective seismic weight W located on or assigned to floor level x.

The seismic force on each flexible diaphragm shall be distributed along the span of that diaphragm, proportional to its displaced shape.

Diaphragms transferring horizontal forces from discontinuous vertical elements shall be taken as force controlled. Actions on other diaphragms shall be considered force or deformation controlled as specified for diaphragm components in Chapters 9 through 12.

C7.4.1.3.4 Diaphragm Forces for LSP Further information on force distribution in flexible diaphragms is given in Section C7.2.9.

7.4.1.3.5 Distribution of Seismic Forces for Unreinforced Masonry Buildings with Flexible Diaphragms for LSP For unreinforced masonry buildings with flexible diaphragms for which the fundamental period is calculated using Eq. (7-20), it shall be permitted to calculate and distribute the pseudo lateral force as follows:

1. The period shall be calculated from Eq. (7-10) for each span of the building and at each level;
2. The pseudo seismic force for each span shall be calculated by Eq. (7-21);
3. The pseudo seismic forces calculated for all spans shall be applied and forces in the vertical seismic-force-resisting elements shall be calculated using tributary forces;
4. The diaphragm forces for evaluation of diaphragms shall be determined from the results of step 3 above and distributed along the diaphragm span considering its deflected shape; and
5. The diaphragm deflections shall not exceed 6 in. for this method of distribution of pseudo seismic force to be applicable.

C7.4.1.3.5 Distribution of Seismic Forces for Unreinforced Masonry Buildings with Flexible Diaphragms for LSP These provisions are based on Chapter A1 of the 2012 International Existing Building Code (ICC 2012). See FEMA 357 (2000h), Appendix D, for more information.

7.4.1.4 Damping for LSP For buildings analyzed using the linear static procedure, the response spectra shall be based on the damping specified in Section 7.2.3.6.

7.4.2 Linear Dynamic Procedure (LDP)

7.4.2.1 Basis of the Procedure If the LDP is selected for seismic analysis of the building, the seismic forces, their distribution over the height of the building, and the corresponding internal forces and system displacements shall be determined using a linearly elastic, dynamic analysis in compliance with the requirements of this section.

Buildings shall be modeled with linearly elastic stiffness and equivalent viscous damping values consistent with components responding at or near yield level, as defined in Section 7.5.1. Modeling and analysis procedures to calculate forces and deformations shall be in accordance with Section 7.4.2.2.

Results of the LDP shall be checked using the acceptance criteria of Section 7.5.2.

C7.4.2.1 Basis of the Procedure Modal spectral analysis is carried out using linearly elastic response spectra that are not modified to account for anticipated nonlinear response. As with the LSP, it is expected that the LDP will produce displacements that approximate maximum displacements expected during the selected Seismic Hazard Level but will produce internal forces that exceed those that would be obtained in a yielding building.

Calculated internal forces typically exceed those that the building can sustain because of anticipated inelastic response of components. These forces are evaluated through the acceptance criteria of Section 7.5.2, which include modification factors and alternative analysis procedures to account for anticipated inelastic response demands and capacities.

7.4.2.2 Modeling and Analysis Considerations for LDP

7.4.2.2.1 General The ground motion characterized for dynamic analysis shall comply with the requirements of Section 7.4.2.2.2. The dynamic analysis shall be performed using the response spectrum method in accordance with Section 7.4.2.2.3 or the response history method in accordance with Section 7.4.2.2.4.

7.4.2.2.2 Ground Motion Characterization for LDP The horizontal ground motion shall be characterized by the requirements of Section 2.4 and shall be one of the following:

1. A response spectrum as specified in Section 2.4.1.7;
2. A site-specific response spectrum as specified in Section 2.4.2.1; or
3. Ground motion acceleration histories as specified in Section 2.4.2.2.

7.4.2.2.3 Response Spectrum Method for LDP Dynamic analysis using the response spectrum method shall calculate peak modal responses for sufficient modes to capture at least 90% of the participating mass of the building in each of two orthogonal principal horizontal directions of the building.

Peak member forces, displacements, story forces, story shears, and base reactions for each mode of response shall be combined by either the square root sum of squares (SRSS) rule or the complete quadratic combination (CQC) rule.

Multidirectional seismic effects shall be considered in accordance with the requirements of Section 7.2.5.

C7.4.2.2.3 Response Spectrum Method for LDP The LDP includes two analysis methods, namely, the response spectrum method and the response history method. The response spectrum method uses peak modal responses calculated from dynamic analysis of a mathematical model. Only those modes contributing significantly to the response need to be considered. Modal responses are combined using rational methods to estimate total building response quantities. The response history method involves a time-step by time-step evaluation of building response, using discretized recorded or synthetic earthquake records as base motion input. Pairs of ground motion records for simultaneous analysis along each horizontal axis of the building should be consistent. Consistent pairs are the orthogonal motions expected at a given site based on the same earthquake. Guidance for correlation between two sets of ground motion acceleration histories is provided in the U.S. Nuclear Regulatory Commission Regulatory Guide 1.92 (USNRC 1976).

7.4.2.2.4 Linear Response History Method For the LDP, response history analysis shall be performed in accordance with the requirements for the nonlinear response history method specified in Section 7.4.4.2.3.

7.4.2.3 Determination of Forces and Deformations for LDP

7.4.2.3.1 Modification of Demands for LDP All forces and deformations calculated using either the response spectrum or the response history method shall be multiplied by the product of the modification factors C_1 and C_2 defined in Section 7.4.1.3 and further modified to consider the effects of torsion in accordance with Section 7.2.3.2.

7.4.2.3.2 Diaphragm Forces for LDP Diaphragms shall be evaluated or retrofitted to resist the combined effects of the seismic forces calculated by the LDP and the horizontal forces resulting from offsets in, or changes in stiffness of, the vertical seismic framing elements above and below the diaphragm. The seismic forces calculated by the LDP shall be taken as not less than 85% of the forces calculated using Eq. (7-26). Actions resulting from offsets in or changes in stiffness of the vertical seismic framing elements shall be taken as force controlled, unless smaller forces are justified by a rational analysis approved by the authority having jurisdiction.

Diaphragms receiving horizontal forces from discontinuous vertical elements shall be taken as force controlled. Actions on other diaphragms shall be considered force or deformation controlled as specified for diaphragm components in Chapters 9 through 12.

7.4.2.4 Damping for LDP For buildings analyzed using the response spectrum method, modal damping ratios shall be determined in accordance with Section 7.2.3.6.

For buildings analyzed using the linear response history method, damping shall be modeled in accordance with the nonlinear dynamic procedures in Section 7.4.4.4. Target damping ratios shall be determined in accordance with Section 7.2.3.6.

7.4.3 Nonlinear Static Procedure (NSP)

7.4.3.1 Basis of the Procedure If the NSP is selected for seismic analysis of the building, a mathematical model directly incorporating the nonlinear load-deformation characteristics of individual components of the building shall be subjected to monotonically increasing lateral loads representing inertia forces in an earthquake until a target displacement is exceeded. Mathematical modeling and analysis procedures shall comply with the requirements of Section 7.4.3.2. The target displacement shall be calculated by the procedure in Section 7.4.3.3.

C7.4.3.1 Basis of the Procedure The target displacement is intended to represent the maximum displacement likely to be experienced for the selected Seismic Hazard Level. Because the

mathematical model accounts directly for effects of material inelastic response, the calculated internal forces are reasonable approximations of those expected for the selected Seismic Hazard Level.

7.4.3.2 Modeling and Analysis Considerations for NSP

7.4.3.2.1 General Requirements for NSP Selection of a control node, selection of seismic force patterns, determination of the fundamental period, and application of the analysis procedure shall comply with the requirements of this section.

The relation between base shear force and lateral displacement of the control node shall be established for control node displacements ranging between 0 and 150% of the target displacement, δ_t.

The component gravity loads shall be included in the mathematical model for combination with seismic forces as specified in Section 7.2.2. The seismic forces shall be applied in both the positive and negative directions, and the maximum seismic effects shall be used for analysis.

The analysis model shall be discretized to represent the force–deformation response of each component along its length to identify locations of inelastic action.

Primary and secondary components of seismic-force-resisting elements shall be included in the model, as specified in Section 7.2.3.3.

The force–displacement behavior of all components shall be explicitly included in the model using full backbone curves that include strength degradation and residual strength, if any.

The NSP shall be used in conjunction with the acceptance criteria of Sections 7.5.3.2.1 and 7.5.3.2.2.

C7.4.3.2.1 General Requirements for NSP The requirement to carry out the analysis to at least 150% of the target displacement is meant to encourage the engineer to investigate likely building performance and behavior of the model under extreme load conditions that exceed the analysis values of the Seismic Hazard Level under consideration. The engineer should recognize that the target displacement represents a mean displacement value for the selected Seismic Hazard Level and that there is considerable scatter about the mean. Estimates of the target displacement may be unconservative for buildings with low strength compared with the elastic spectral demands.

The Simplified NSP of ASCE 41-06 is no longer included as an analysis option because it is often difficult to implement. Analysis using the Simplified NSP makes it difficult to properly satisfy the requirements of ASCE 41-13. Defining the force–deformation characteristics, primary versus secondary components, and the appropriate acceptance criteria is often challenging and potentially erroneous. The use of elastic-plastic backbone curves with the NSP of Section 7.3.2.1 should be permitted, with postprocessing to prove that the initial elastic-plastic assumption is appropriate.

When the strength degradation of components is not explicitly modeled, the μ_{max} factor cannot be reliably estimated, and dynamic instability cannot be assessed beyond comparing component acceptance criteria with the corresponding demand. Elastic-plastic component action modeling of the Simplified NSP may miss potential failure mechanisms, particularly for taller buildings.

7.4.3.2.2 Control Node Displacement for NSP The control node shall be located at the center of mass at the roof of a building. For buildings with a penthouse, the floor of the penthouse shall be regarded as the level of the control node. The displacement of the control node in the mathematical model shall be calculated for the specified seismic forces.

7.4.3.2.3 Lateral Load Distribution for NSP Lateral loads shall be applied to the mathematical model in proportion to the distribution of mass in the plane of each floor diaphragm. The vertical distribution of these forces shall be proportional to the shape of the fundamental mode in the direction under consideration.

C7.4.3.2.3 Lateral Load Distribution for NSP The distribution of lateral inertial forces determines relative magnitudes of shears, moments, and deformations within the structure. The actual distribution of these forces is expected to vary continuously during earthquake response as portions of the structure yield and stiffness characteristics change. The extremes of this distribution depend on the severity of the earthquake shaking and the degree of nonlinear response of the structure. More than one seismic force pattern has been used in the past as a way to bound the range of actions that may occur during actual dynamic response. Research in FEMA 440 (2005) has shown that multiple force patterns do little to improve the accuracy of nonlinear static procedures and that a single pattern based on the first mode shape is recommended.

7.4.3.2.4 Idealized Force–Displacement Curve for NSP The nonlinear force–displacement relationship between base shear and displacement of the control node shall be replaced with an idealized relationship to calculate the effective lateral stiffness, K_e, and effective yield strength, V_y, of the building, as shown in Fig. 7-3.

The first line segment of the idealized force–displacement curve shall begin at the origin and have a slope equal to the effective lateral stiffness, K_e. The effective lateral stiffness, K_e, shall be taken as the secant stiffness calculated at a base shear force equal to 60% of the effective yield strength of the structure. The effective yield strength, V_y, shall not be taken as greater than the maximum base shear force at any point along the force–displacement curve.

The second line segment shall represent the positive post-yield slope ($\alpha_1 K_e$), determined by a point (V_d, Δ_d) and a point at the intersection with the first line segment such that the areas above and below the actual curve are approximately balanced. (V_d, Δ_d) shall be a point on the actual force–displacement curve at the calculated target displacement, or at the displacement corresponding to the maximum base shear, whichever is least.

The third line segment shall represent the negative post-yield slope ($\alpha_2 K_e$), determined by the point at the end of the positive post-yield slope (V_d, Δ_d) and the point at which the base shear degrades to 60% of the effective yield strength.

C7.4.3.2.4 Idealized Force–Displacement Curve for NSP The idealized force–displacement curve is developed using an itera-

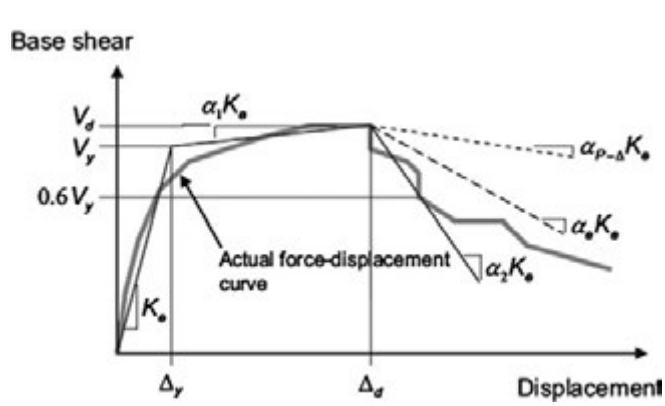

FIG. 7-3. Idealized Force–Displacement Curves

tive graphical procedure to balance the areas below the actual and idealized curves up to Δ_d such that the idealized curve has the properties defined in this section. The definition of the idealized force–displacement curve was modified from the definition in FEMA 356 (2000g) based on the recommendations of FEMA 440 (2005).

7.4.3.2.5 Period Determination for NSP The effective fundamental period in the direction under consideration shall be based on the idealized force–displacement curve defined in Section 7.4.3.2.4. The effective fundamental period, T_e, shall be calculated in accordance with Eq. (7-27):

$$T_e = T_i \sqrt{\frac{K_i}{K_e}} \tag{7-27}$$

where T_i = Elastic fundamental period (in seconds) in the direction under consideration calculated by elastic dynamic analysis;
K_i = Elastic lateral stiffness of the building in the direction under consideration calculated using the modeling requirements of Section 7.2.3.4; and
K_e = Effective lateral stiffness of the building in the direction under consideration.

7.4.3.2.6 Analysis of Mathematical Models for NSP Separate mathematical models representing the framing along two orthogonal axes of the building shall be developed for two-dimensional analysis. A mathematical model representing the framing along two orthogonal axes of the building shall be developed for three-dimensional analysis.

The effects of torsion shall be evaluated in accordance with Section 7.2.3.2.

Independent analysis along each of the two orthogonal principal axes of the building shall be permitted unless concurrent evaluation of multidirectional effects is required by Section 7.2.5.

7.4.3.3 Determination of Forces, Displacements, and Deformations for NSP

7.4.3.3.1 General Requirements for NSP For buildings with rigid diaphragms at each floor level, the target displacement, δ_t, shall be calculated in accordance with Eq. (7-28) or by an approved procedure that accounts for the nonlinear response of the building.

For buildings with nonrigid diaphragms at each floor level, diaphragm flexibility shall be explicitly included in the model. The target displacement shall be calculated as specified for rigid diaphragms, except that it shall be amplified by the ratio of the maximum displacement at any point on the roof to the displacement at the center of mass of the roof (δ_{max}/δ_{cm}). δ_{max} and δ_{cm} shall be based on a response spectrum analysis of a three-dimensional model of the building. The target displacement so calculated shall be no less than that displacement given by Eq. (7-28). No line of vertical seismic framing shall be evaluated for displacements smaller than the target displacement.

Alternatively, for buildings with flexible diaphragms at each floor level, a target displacement shall be calculated for each line of vertical seismic framing. The target displacement for an individual line of vertical seismic framing shall be as specified for buildings with rigid diaphragms, except that the masses shall be assigned to each line on the basis of tributary area.

Element forces and deformations corresponding to the control node displacement equaling or exceeding the target displacement shall comply with acceptance criteria of Section 7.5.3.

7.4.3.3.2 Target Displacement for NSP The target displacement, δ_t, at each floor level shall be calculated in accordance with Eq. (7-28) and as specified in Section 7.4.3.3.1.

$$\delta_t = C_0 C_1 C_2 S_a \frac{T_e^2}{4\pi^2} g \tag{7-28}$$

where S_a = Response spectrum acceleration at the effective fundamental period and damping ratio of the building in the direction under consideration, as calculated in Sections 2.4.1 or 2.4.2;
g = acceleration of gravity;
C_0 = Modification factor to relate spectral displacement of an equivalent single-degree-of-freedom (SDOF) system to the roof displacement of the building multi-degree-of-freedom (MDOF) system calculated using one of the following procedures:
The first mode mass participation factor multiplied by the ordinate of the first mode shape at the control node;
The mass participation factor calculated using a shape vector corresponding to the deflected shape of the building at the target displacement multiplied by ordinate of the shape vector at the control node; or
The appropriate value from Table 7-5;
C_1 = Modification factor to relate expected maximum inelastic displacements to displacements calculated for linear elastic response. For periods less than 0.2 s, C_1 need not be taken greater than the value at T = 0.2 s. For periods greater than 1.0 s, C_1 = 1.0.

$$C_1 = 1 + \frac{\mu_{strength} - 1}{a T_e^2} \tag{7-29}$$

where a = Site class factor:
= 130 Site Class A or B;
= 90 Site Class C;
= 60 Site Class D, E, or F;
T_e = Effective fundamental period of the building in the direction under consideration, in seconds;
T_s = Characteristic period of the response spectrum, defined as the period associated with the transition from the constant acceleration segment of the spectrum to the constant velocity segment of the spectrum per Section 2.4.1.7.1;
$\mu_{strength}$ = Ratio of elastic strength demand to yield strength coefficient calculated in accordance with Eq. (7-31). Use of the NSP is not permitted where $\mu_{strength}$ exceeds μ_{max}, per Section 7.3.2.1; and

Table 7-5. Values for Modification Factor C_0

	Shear Buildings[a]		Other Buildings
Number of Stories	Triangular Load Pattern (1.1, 1.2, 1.3)	Uniform Load Pattern (2.1)	Any Load Pattern
1	1.0	1.0	1.0
2	1.2	1.15	1.2
3	1.2	1.2	1.3
5	1.3	1.2	1.4
10+	1.3	1.2	1.5

NOTE: Linear interpolation shall be used to calculate intermediate values.
[a]Buildings in which, for all stories, story drift decreases with increasing height.

C_2 = Modification factor to represent the effect of pinched hysteresis shape, cyclic stiffness degradation, and strength deterioration on the maximum displacement response. For periods greater than 0.7 s, $C_2 = 1.0$;

$$C_2 = 1 + \frac{1}{800}\left(\frac{\mu_{\text{strength}} - 1}{T_e}\right)^2 \tag{7-30}$$

The strength ratio μ_{strength} shall be calculated in accordance with Eq. (7-31):

$$\mu_{\text{strength}} = \frac{S_a}{V_y / W}.C_m \tag{7-31}$$

where S_a is defined above and

V_y = Yield strength of the building in the direction under consideration calculated using results of the NSP for the idealized nonlinear force–displacement curve developed for the building in accordance with Section 7.4.3.2.4;

W = Effective seismic weight, as calculated in Section 7.4.1.3.1; and

C_m = Effective mass factor from Table 7-4. Alternatively, C_m, taken as the effective modal mass participation factor calculated for the fundamental mode using an eigenvalue analysis, shall be permitted. C_m shall be taken as 1.0 if the fundamental period, T, is greater than 1.0 s.

For buildings with negative post-yield stiffness, the maximum strength ratio, $\mu_{\max}$, shall be calculated in accordance with Eq. (7-32).

$$\mu_{\max} = \frac{\Delta_d}{\Delta_y} + \frac{|\alpha_e|^{-h}}{4} \tag{7-32}$$

where Δ_d = Lesser of the target displacement, δ_t, or displacement corresponding to the maximum base shear defined in Fig. 7-3;

Δ_y = Displacement at effective yield strength defined in Fig. 7-3;

$h = 1 + 0.15 \ln T_e$; and

α_e = Effective negative post-yield slope ratio defined in Eq. (7-33).

The effective negative post-yield slope ratio, α_e, shall be calculated in accordance with Eq. (7-33):

$$\alpha_e = \alpha_{P-\Delta} + \lambda(\alpha_2 - \alpha_{P-\Delta}) \tag{7-33}$$

where α_2 = Negative post-yield slope ratio defined in Fig. 7-3. This ratio includes P-Δ effects, in-cycle degradation, and cyclic degradation;

$\alpha_{P-\Delta}$ = Negative slope ratio caused by P-Δ effects; and

λ = Near-field effect factor:

= 0.8 if $S_{X1} \geq 0.6$ for BSE-2N;

= 0.2 if $S_{X1} \leq 0.6$ for BSE-2N.

C7.4.3.3.2 Target Displacement for NSP This standard presents the coefficient method for calculating target displacement. Other procedures can also be used. Section C3.3.3.3 of FEMA 274 (1997b) and FEMA 440 (2005) present additional background information on the coefficient method and another acceptable procedure referred to as the capacity spectrum method.

The C_0 coefficient accounts for the difference between the roof displacement of a multi-degree-of-freedom (MDOF) building and the displacement of the equivalent single-degree-of-freedom (SDOF) system. Using only the first mode shape (ϕ_1) and elastic behavior, coefficient C_0 is equal to

$$C_0 = \phi_{1,r}\frac{\{\phi_1\}^T[M]\{1\}}{\{\phi_1\}^T[M]\{\phi_1\}} = \phi_{1,r}\Gamma_1 \tag{C7-4}$$

where $\phi_{1,r}$ = The ordinate of mode shape 1 at the roof (control node);

$[M]$ = A diagonal mass matrix; and

Γ_1 = The first modal mass participation factor.

Because the mass matrix is diagonal, Eq. C7-4 can be rewritten as

$$C_0 = \phi_{1,r}\frac{\sum_1^N m_i\phi_{i,n}}{\sum_1^N m_i\phi_{i,n}^2} \tag{C7-5}$$

where m_i = The mass at level i and

$\phi_{i,n}$ = The ordinate of mode shape i at level n.

If the absolute value of the roof (control node) ordinate of each mode shape is set equal to unity, the value of coefficient C_0 is equal to the first mode mass participation factor.

Explicit calculation of C_0 using the actual deflected shape may be beneficial in terms of lower amplification of target displacement. The actual shape vector may take on any form, particularly because it is intended to simulate the time-varying deflection profile of the building responding inelastically to the ground motion and is likely to be different from the elastic first-mode shape. If this method is used, the mass participation factor, Γ_1, must be calculated using the actual deflected shape as the shape vector in lieu of the mode shape.

Use of the tabulated values, which are based on a straight-line vector with equal masses at each floor level, is approximate (particularly if masses vary much over the height of the building) and may be overly conservative.

Coefficients for estimating the target displacement have been modified based on the recommendations contained in FEMA 440 (2005).

FEMA 440 (2005) concluded that the previous cap on the C_1 factor was not appropriate, and a simplified equation was recommended based on μ_{strength}, effective period, T_e, and the site class factor, a, with a revised cap at $T = 0.2$ s. FEMA 440 (2005) recommended site class factors for Site Classes B, C, and D only. The site class factor for Site Class A was set equal to that for B, and the site class factor for Site Classes E and F was set equal to that for D. The use of the simplified C_1 equation to estimate displacements for soft soil sites, including classes E and F, has higher uncertainty because of high dispersions of the results in studies of SDOF oscillators on soft soils. See FEMA 440 (2005) for more discussion on uncertainties related to the C_1 equation.

The C_2 factor was revised to better account for the effects of cyclic degradation of stiffness, as recommended in FEMA 440 (2005). For buildings with systems that do not exhibit degradation of stiffness and/or strength, the C_2 coefficient can be assumed to be 1.0. This assumption would include buildings with modern concrete or steel special moment-resisting frames, steel eccentrically braced frames, and buckling-restrained braced frames as either the original system or the system added during seismic retrofit.

The C_3 coefficient has been eliminated and replaced with a maximum strength ratio, $\mu_{\max}$, which is intended to measure dynamic instability. Where the value for $\mu_{\max}$ is exceeded, an NDP analysis is recommended to capture strength degradation and dynamic P-Δ effects to confirm dynamic stability of the building. As recommended in FEMA 440 (2005), the NDP anal-

ysis should include the in-cycle or cyclic strength or stiffness degradation in the hysteretic models of the components as required. The effective negative post-yield slope ratio, α_e, was introduced in FEMA 440 (2005) as a variable necessary to determine the maximum strength ratio, μ_{max}, that a building can have before dynamic instability is a concern. The negative slope caused by P-Δ effects, $\alpha_{P\text{-}\Delta}$, is based on the restoring force needed to balance the overturning moment caused by the weight of the structure displaced by an amount Δ, acting at the effective height of the first mode. It can be determined using structural analysis software by comparing the stiffness results of an analysis run with P-Δ effects to one run without P-Δ effects considered.

7.4.3.3.3 Modification of Demands for NSP The target displacement shall be modified to consider the effects of torsion in accordance with Section 7.2.3.2.

7.4.3.3.4 Diaphragms for NSP Diaphragms shall be evaluated or retrofitted to resist the combined effects of the horizontal forces resulting from offsets in, or changes in stiffness of, the vertical seismic framing elements above and below the diaphragm and the diaphragm forces determined using either Section 7.4.1.3.4 or Section 7.4.2.3.2.

7.4.3.4 Damping for NSP For buildings analyzed using the nonlinear static procedure, the damping shall be in accordance with Section 7.2.3.6.

7.4.4 Nonlinear Dynamic Procedure (NDP)

7.4.4.1 Basis of the Procedure If the NDP is selected for seismic analysis of the building, a mathematical model directly incorporating the nonlinear load-deformation characteristics of individual components of the building shall be subjected to earthquake shaking represented by ground motion acceleration histories in accordance with Section 2.4.2.2 to obtain forces and displacements.

Calculated displacements and forces shall be compared directly with acceptance criteria specified in Section 7.5.3.

C7.4.4.1 Basis of the Procedure The basis, modeling approaches, and acceptance criteria of the NDP are similar to those for the NSP. The main exception is that the response calculations are carried out using response history analysis. With the NDP, the displacements are not established using a target displacement but, instead, are determined directly through dynamic analysis using ground motion acceleration histories. Calculated response can be highly sensitive to characteristics of individual ground motions; therefore, the analysis should be carried out with more than one ground motion record. Because the numerical model accounts directly for effects of material inelastic response, the calculated internal forces are reasonable approximations of those expected for the selected Seismic Hazard Level.

7.4.4.2 Modeling and Analysis Considerations for NDP

7.4.4.2.1 General Requirements for NDP The modeling and analysis requirements specified in Section 7.4.3.2 for the NSP shall apply to the NDP, excluding considerations of control node and target displacements.

7.4.4.2.2 Ground Motion Characterization for NDP For the NDP, earthquake shaking shall be characterized by discretized recorded or synthetic earthquake records as base motion meeting the requirements of Section 2.4.2.2.

7.4.4.2.3 Nonlinear Response History Method for NDP For the NDP, response history analysis shall be performed using horizontal ground motion acceleration histories prepared according to the requirements of Section 2.4.2.2.

If Ritz vector-based nonlinear response history analysis is adopted as the integration solution, the analysis shall include sufficient modes to capture at least 90% mass participation, the time step shall be sufficiently small to ensure convergence to a mathematically accurate solution, and sufficient vectors shall be included to capture accurately local dynamic response in the nonlinear elements.

Response parameters shall be calculated for each response history analysis. The number of analyses required, method of computing results, and treatment of concurrent effects shall be accounted for in accordance with Section 7.2.5.

C7.4.4.2.3 Nonlinear Response History Method for NDP Nonlinear modal response history (also called fast nonlinear analysis, or FNA) can be an efficient method to analyze structures that are predominantly linear-elastic but have a limited number of predefined nonlinear link/support elements (Wilson 2010). The response of a structure using FNA depends on being able to adequately represent the nonlinear forces by the modal forces and requires the following special considerations:

1. Mass or mass moments of inertia should be present at all nonlinear degrees of freedom, and
2. The Ritz vector method should be used for the modal analysis.

An appropriate number of modes should be used in the modal analysis to represent adequately the nonlinear forces by modal forces. This representation can be accomplished by ensuring that the static modal load participation ratio of each nonlinear degree of freedom is 100%. An additional measure that can be used to determine the appropriate number of modes is the dynamic modal load participation ratio, but for many structures the ratio does not equal 100% because the method is not capturing the high-frequency response of each nonlinear degree of freedom, a result that may or may not affect the accuracy of the results. As a rule of thumb, the number of modes that should be calculated is equal to the nonlinear degrees of freedom multiplied by 2.5, a value that can be reduced if there are degrees of freedom that are constrained to each other.

The NDP FNA should follow from an appropriate FNA representing the response of the structure to gravity loads. This quasistatic FNA can be performed by applying the gravity load case as a ramp function while applying high modal damping.

The following criteria provide guidance on time step selection:

1. The analysis time step should not be greater than the step at which the ground motion acceleration histories are digitized;
2. The analysis time step should not be less than or equal to
   $T/100$;
   T_{90}; and
   0.01 s;
   where T = Fundamental period of the building in the direction under consideration (judged by largest mass contribution) and
   T_{90} = Period of the highest mode in the same direction as T to achieve 90% modal mass participation.
3. Use of a 50% smaller time step results in a difference in response of less than 10%.

Items 1 and 2 are based on NZS 1170.5:2004 Part 5: *Earthquake actions—New Zealand* (SNZ 2004). For the direct-integration analysis method, selection of too large a time step can result in higher mode (short-period) responses not being captured or convergence to an incorrect solution, particularly for

models exhibiting highly nonlinear characteristics. Guidance for correlation between sets of ground motion acceleration histories is provided in the U.S. Nuclear Regulatory Commission Regulatory Guide 1.92 (USNRC 1976).

7.4.4.3 Determination of Forces and Deformations for NDP Dynamic analysis performed using the nonlinear response history method shall calculate building response at discrete time steps using discretized recorded or synthetic ground motion acceleration histories. Average and maximum component actions, including forces and deformations, shall be determined in accordance with the following:

1. Where component response is independent of the direction of action, the average shall be calculated as the mathematical mean of the maximum absolute response from each response history analysis. Where component response is dependent on the direction of action, the average response parameter shall be calculated independently for each direction and axis as the mathematical means of the maximum positive and minimum negative response from each response history analysis.
2. Where component response is independent of the direction of action, the maximum response shall be calculated as the maximum absolute response from each response history analysis. Where component response is dependent on the direction of action, the maximum response parameter shall be determined independently for each direction of action as the maximum positive and minimum negative response from each response history analysis.

C7.4.4.3 Determination of Forces and Deformations for NDP Where component response is a function of interacting actions, such as axial load and moment for a column or shear wall, response can be evaluated at the governing time step or by conservatively combining enveloped actions from each response history analysis, regardless of the time at which they occur.

Examples of component responses that are likely to be independent of the direction of action include shear about the same axis in a beam, column, or wall; plastic hinge rotation about the same axis in a symmetric shear wall or column; and building drifts as used for the evaluation and retrofit of nonstructural glazing systems or partitions.

For components that are sensitive to the direction of loading, forces and deformations should be determined such that the significance of positive and negative signed values is preserved during the processing of results. Examples of component responses that are likely to depend on the direction of action are axial tension versus compression in a column; positive and negative bending or plastic hinge rotation about the same axis in an asymmetrically reinforced concrete beam; plastic hinge rotation about the same axis in an asymmetric shear wall (e.g., L- or T-shaped); and relative displacement perpendicular to a building joint (pounding).

7.4.4.3.1 Modification of Demands for NDP The effects of torsion shall be considered in accordance with Section 7.2.3.2.

7.4.4.3.2 Diaphragm Forces for NDP Diaphragms shall be evaluated or retrofitted to resist the effects of the seismic forces calculated by dynamic analysis, including the effects of the horizontal forces resulting from offsets in, or changes in stiffness of, the vertical seismic framing elements above and below the diaphragm.

7.4.4.4 Damping for NDP Damping shall be modeled using Rayleigh damping or other rational methodology. Target equivalent elastic viscous damping ratios shall be determined in accordance with Section 7.2.3.6.

Where damping is implemented using mass and stiffness proportional methods, the target equivalent viscous damping ratios shall be applied such that the first translational mode in each direction, including expected period lengthening under nonlinear response, are damped by no more than the target equivalent viscous damping ratio and

1. The average equivalent viscous damping ratio, weighted by mass participation over the modes required to achieve 90% mass participation, shall not exceed the target equivalent viscous damping ratio; and
2. No more than eight times the first translational mode damping is provided in the highest translational mode required to achieve 90% mass participation, unless substantiated through analysis or test data.

C7.4.4.4 Damping for NDP Target damping ratios should be implemented considering both the expected linear-elastic and nonlinear response of the structure to avoid overdamped solutions. If the period of the structure is expected to lengthen, then the damping ratio should also be limited to not greater than the target equivalent viscous damping ratio at long periods (e.g., $1.5T_1$ to $2.0T_1$). The provisions for mass and stiffness proportional damping methods are based on NZS 1170.5:2004 Part 5: *Earthquake actions—New Zealand* (SNZ 2004).

Care should be taken with beta-*K* damping when used with degrading components or those that experience sudden changes in stiffness such as uplift springs.

7.5 ACCEPTANCE CRITERIA

7.5.1 General Requirements The acceptability of force and deformation actions shall be evaluated for each component in accordance with the requirements of this section. Before selecting component acceptance criteria, each component shall be classified as primary or secondary in accordance with Section 7.5.1.1, and each action shall be classified as deformation controlled (ductile) or force controlled (nonductile) in accordance with Section 7.5.1.2. Component strengths, material properties, and component capacities shall be determined in accordance with Sections 7.5.1.3, 7.5.1.4, and 7.5.1.5, respectively. Component acceptance criteria not specified in this standard shall be determined by qualification testing in accordance with Section 7.6.

To achieve a selected Performance Objective, the building shall be provided with at least one continuous load path to transfer seismic forces, induced by ground motion in any direction, from the point of application of the seismic force to the final point of resistance. All primary and secondary components shall be capable of resisting force and deformation actions within the applicable acceptance criteria of the selected Performance Level.

Components analyzed using the linear procedures of Section 7.4.1 and Section 7.4.2 shall satisfy the requirements of Section 7.5.2. Components analyzed using the nonlinear procedures of Section 7.4.3 and Section 7.4.4 shall satisfy the requirements of Section 7.5.3.

Foundations shall satisfy the criteria specified in Chapter 8.

C7.5.1 General Requirements The linear analysis procedures are intended to provide a conservative estimate of building response and performance for the selected Seismic Hazard Level. Because the actual response of buildings to earthquakes is typically nonlinear, nonlinear analysis procedures should

provide more accurate representations of building response and performance. In recognition of the improved estimates of nonlinear analysis, the acceptance criteria for nonlinear procedures are more accurate and less conservative than those for linear procedures. Buildings that do not comply with the linear analysis acceptance criteria may comply with nonlinear acceptance criteria. Therefore, performing a nonlinear analysis is recommended to minimize or eliminate unnecessary seismic retrofit. Design professionals are encouraged to consider the limitations of linear procedures and to pursue nonlinear analyses where linear acceptance criteria are not met.

7.5.1.1 Primary and Secondary Components Components that affect the lateral stiffness or distribution of forces in a structure, or are loaded as a result of lateral deformation of the structure, shall be classified as primary or secondary, even if they are not intended to be part of the seismic-force-resisting system.

A structural component that is required to resist seismic forces and accommodate deformations for the structure to achieve the selected Performance Level shall be classified as primary.

A structural component that accommodates seismic deformations and is not required to resist seismic forces for the structure to achieve the selected Performance Level shall be permitted to be classified as secondary.

C7.5.1.1 Primary and Secondary Components The designation of primary and secondary components has been introduced to allow some flexibility in the evaluation and retrofit process. Primary components are those that the engineer relies on to resist the specified earthquake effects. Secondary components are those that the engineer does not rely on to resist the specified earthquake effects. Typically, the secondary designation is used where a component does not add considerably or reliably to the earthquake resistance. In all cases, the engineer must verify that gravity loads are sustained by the structural system, regardless of the designation of primary and secondary components.

The secondary designation typically is used where one or more of the following cases apply:

1. The secondary designation may be used where a nonstructural component does not contribute significantly or reliably to resist earthquake effects in any direction. A gypsum partition is a nonstructural component that might be designated secondary in a building because it does not provide significant stiffness or strength in any direction;
2. The secondary designation may be used where a structural component does not contribute significantly to resist earthquake effects. A slab–column interior frame is an element whose structural components might be designated as secondary in a building braced by much stiffer and stronger perimeter frames or shear walls. If the stronger perimeter frames or shear walls exist only in one direction, the components of the slab–column interior frame may be designated as secondary for that direction only. The connection at the base of a column that is nominally pinned where it connects to the foundation is a component that might be designated as secondary because the moment resistance is low relative to the entire system resistance; and
3. The secondary designation may be used where a component, intended in the original design of the building to be primary, is deformed beyond the point where it can be relied on to resist earthquake effects. For example, it is conceivable that coupling beams connecting wall piers might exhaust their deformation capacity before the entire structural system capacity is reached. In such cases, the engineer may designate these beams as secondary, allowing them to be deformed beyond their useful limits, provided that damage to these secondary components does not result in loss of gravity load capacity.

7.5.1.2 Deformation-Controlled and Force-Controlled Actions All actions shall be classified as either deformation controlled or force controlled using the component force versus deformation curves shown in Fig. 7-4.

Deformation-controlled actions are defined in Chapters 8 through 12 of this standard by the designation of linear and nonlinear acceptance criteria. Where linear and nonlinear acceptance criteria are not specified in the standard and component testing in accordance with Section 7.6 is not performed, actions shall be taken as force controlled.

The Type 1 curve depicted in Fig. 7-4 is representative of ductile behavior where there is an elastic range (points 0 to 1 on the curve) and a plastic range (points 1 to 3), followed by loss of seismic-force-resisting capacity at point 3 and loss of gravity-load-resisting capacity at point 4. The plastic range can have either a positive or negative post-elastic slope (points 1 to 2) and a strength-degraded region with nonnegligible residual strength to resist seismic forces and gravity loads (points 2 to 3). Primary component actions exhibiting this behavior shall be classified as deformation-controlled if the plastic range is such that $d \geq 2g$; otherwise, they shall be classified as force controlled. Secondary component actions exhibiting this behavior shall be classified as deformation controlled for any d/g ratio.

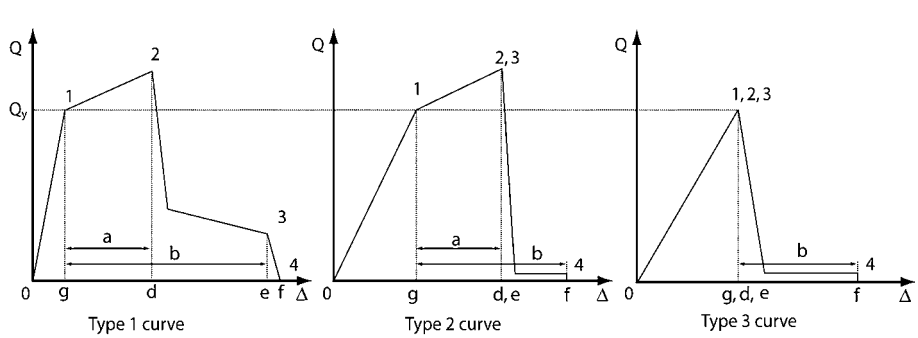

Notes:
1. Only secondary component actions permitted between points 2 and 4;
2. The force, Q, after point 3 diminishes to approximately zero.

FIG. 7-4. Component Force Versus Deformation Curves

The Type 2 curve depicted in Fig. 7-4 is representative of ductile behavior where there is an elastic range (points 0 to 1 on the curve) and a plastic range (points 1 to 3). The plastic range can have either a positive or negative post-elastic slope (points 1 to 3) followed by substantial loss of seismic-force-resisting capacity at point 3. Loss of gravity-load-resisting capacity takes place at the deformation associated with point 4. Primary component actions exhibiting this behavior shall be classified as deformation-controlled if the plastic range is such that $e \geq 2g$; otherwise, they shall be classified as force controlled. Secondary component actions exhibiting this behavior shall be classified as deformation controlled if $f \geq 2g$; otherwise, they shall be classified as force controlled.

The Type 3 curve depicted in Fig. 7-4 is representative of a brittle or nonductile behavior where there is an elastic range (points 0 to 1 on the curve) followed by loss of seismic-force-resisting capacity at point 3 and loss of gravity-load-resisting capacity at the deformation associated with point 4. Primary component actions exhibiting this behavior shall be classified as force controlled. Secondary component actions exhibiting this behavior shall be classified as deformation controlled if $f \geq 2g$; otherwise, they shall be classified as force controlled.

For nonlinear procedures, force-controlled components defined in Chapters 8 through 12 may be reclassified as Type 3 deformation-controlled components, provided the following criteria are met:

1. The component action being reclassified exhibits the Type 3 deformation-controlled performance defined in this section;
2. The gravity-load-resisting load path is not altered, or if it is altered, an alternate load path is provided to ensure local stability is maintained in accordance with the load combinations of Section 7.2.2 at the anticipated maximum displacements predicted by the analysis;
3. The total gravity load supported by all components that are reclassified from force controlled to deformation controlled does not exceed 5% of the total gravity load being supported at that story; and
4. All remaining deformation-controlled components meet the acceptance criteria to achieve the target performance level and all remaining force-controlled components are not overstressed.

Where overstrength of Type 3 components alters the expected mechanism in the building, the analysis shall be repeated with the affected Type 3 component strengths increased by the ratio Q_{CE}/Q_y, and all components shall be rechecked.

C7.5.1.2 Deformation-Controlled and Force-Controlled Actions Acceptance criteria for primary components that exhibit Type 1 behavior typically are within the elastic or plastic ranges between points 0 and 2, depending on the performance level. Acceptance criteria for secondary components that exhibit Type 1 behavior can be within any of the performance ranges.

Acceptance criteria for primary and secondary components exhibiting Type 2 behavior are within the elastic or plastic ranges, depending on the performance level.

Acceptance criteria for primary and secondary components exhibiting Type 3 behavior are always within the elastic range.

Table C7-1 provides some examples of possible deformation- and force-controlled actions in common framing systems. Classification of deformation- or force-controlled actions are specified for foundation and framing components in Chapters 8 through 12.

Table C7-1. Examples of Possible Deformation-Controlled and Force-Controlled Actions

Component	Deformation-Controlled Action	Force-Controlled Action
Moment frames		
• Beams	Moment (M)	Shear (V)
• Columns	—	Axial load (P), V
• Joints	—	V[a]
Shear walls	M, V	P
Braced frames		
• Braces	P	—
• Beams	—	P
• Columns	—	P
• Shear link	V	P, M
Connections	P, V, M[b]	P, V, M
Diaphragms	M, V[c]	P, V, M

[a]Shear may be a deformation-controlled action in steel moment frame construction.
[b]Axial, shear, and moment may be deformation-controlled actions for certain steel and wood connections.
[c]If the diaphragm carries lateral loads from vertical-force-resisting elements above the diaphragm level, then M and V shall be considered force-controlled actions.

A given component may have a combination of both deformation- and force-controlled actions.

Classification as a deformation-controlled action is not up to the discretion of the user. Deformation-controlled actions have been defined in this standard by the designation of m-factors or nonlinear deformation capacities in Chapters 8 through 12. Additionally, there are specific provisions for nonlinear analyses when certain force-controlled actions may be reclassified as deformation controlled. Where such values are not designated and component testing justifying Type 1 or Type 2 behavior is absent, actions are to be taken as force controlled.

Figure C7-3 shows the generalized force versus deformation curves used throughout this standard to specify element modeling and acceptance criteria for deformation-controlled actions in any of the four basic material types. Linear response is depicted between point A (unloaded element) and an effective yield point B. The slope from point B to point C is typically a small percentage (0% to 10%) of the elastic slope and is included to represent phenomena such as strain hardening. Point C has an ordinate that represents the strength of the element and an abscissa value equal to the deformation at which significant strength degradation begins (line CD). Beyond point D, the element responds with substantially reduced strength to point E. At deformations greater than point E, the element seismic strength is essentially zero.

The sharp transition as shown on idealized curves in Fig. C7-3 between points C and D can result in computational difficulty and an inability to converge where it is used as modeling input in nonlinear computerized analysis software. For some types of suddenly degrading components (e.g., pre-Northridge connection fracture), this is reflective of the observed component behavior. However, to avoid this computational instability, a small slope (e.g., 10 vertical to 1 horizontal) may be provided to the segment of these curves between points C and D. Alternatively, the slope may be based on data from testing of comparable specimens. (e.g., for reinforced concrete components, it may be acceptable to connect points 2 and 3 for Type 1 components). See PEER/ATC 72-1 (2010) for additional guidance.

For some components, it is convenient to prescribe acceptance criteria in terms of deformation (such as θ or Δ), whereas for

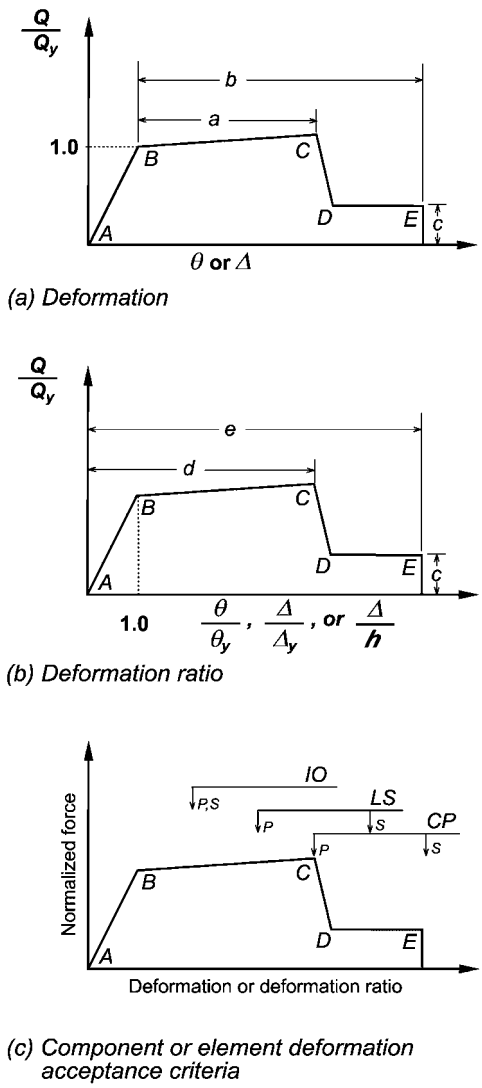

FIG. C7-3. Generalized Component Force-Deformation Relations for Depicting Modeling and Acceptance Criteria

others it is more convenient to give criteria in terms of deformation ratios. To accommodate this different conventions, two types of idealized force versus deformation curves are used in Figs. C7-3 (a) and (b). Fig. C7-3 (a) shows normalized force (Q/Q_y) versus deformation (θ or Δ) and the parameters *a*, *b*, and *c*. Fig. C7-3 (b) shows normalized force (Q/Q_y) versus deformation ratio (θ/θ_y, Δ/Δ_y, or Δ/h) and the parameters *d*, *e*, and *c*. Elastic stiffnesses and values for the parameters *a*, *b*, *c*, *d*, and *e* that can be used for modeling components are given in Chapters 8 through 12 and 14. Acceptance criteria for deformation or deformation ratios for primary components (P) and secondary components (S) corresponding to the target Building Performance Levels of Collapse Prevention (CP), Life Safety (LS), and Immediate Occupancy (IO) as shown in Fig. C7-3 (c) are given in Chapters 8 through 12 and 14.

For nonlinear procedures, it is permitted to allow some components that are force controlled to be reclassified as Type 3 deformation controlled. An example of this reclassification is failure of the welds that connect the brace to the gusset plate in a steel braced frame system. In this case, acceptable performance may still be achieved provided that no gravity load collapse occurs and the remaining seismic-force-resisting system is adequate for the building to meet the selected performance level.

Eventually some critical portion of the gravity-load-resisting system governs the collapse limit for the building (e.g., column rotations, or gravity framing connection CP rotation limits). Nonlinear provisions are intended to make sure that when components fail, they are able to redistribute the forces to other structural elements in the building. In many buildings, almost all elements participate in the structure's seismic-force-resisting system. As the structure is subjected to increasing demands, some of these elements may begin to fail and lose strength much sooner than others. If a structure has sufficient redundancy, it may be permissible to allow failure of some of these elements, as long as this failure does not result in loss of gravity-load-carrying capacity or overall stability.

It is also important to ensure that this type of reclassification is done to elements of the structure that do not support significant gravity loads because their failure could lead to loss of gravity load support and localized collapse. However, elements that support gravity load can be reclassified if it can be demonstrated that an alternate load path for the gravity load support is present and can be maintained at the maximum anticipated seismic displacement.

In these cases, it is important to consider the potential impact of overstrength on the system. For the braced-frame example, a completely different mechanism may result if the brace welds are stronger than assumed. To capture this potential outcome, it is required that the analysis be repeated with stronger "yield" strength and all components rechecked. The quantity Q_{CE}/Q_y is used as an approximate means to establish the upper-bound strength.

7.5.1.3 Expected and Lower-Bound Strengths In Fig. 7-4, Q_y represents the yield strength of the component. Where evaluating the behavior of deformation-controlled actions, the expected strength, Q_{CE}, shall be used. Q_{CE} is defined as the mean value of resistance of a component at the deformation level anticipated for a population of similar components, including consideration of the variability in material strength and strain hardening and plastic section development. Where evaluating the behavior of force-controlled actions, a lower-bound estimate of the component strength, Q_{CL}, shall be used. Q_{CL} is defined as the mean minus one standard deviation of the yield strengths, Q_y, for a population of similar components.

C7.5.1.3 Expected and Lower-Bound Strengths In Fig. 7-4, the strength of a component is affected by inherent variability of the strength of the materials making up the individual components and differences in workmanship and physical condition. See Chapters 8 through 12 and 14 for specific direction regarding the calculation of expected and lower-bound strengths of components.

7.5.1.4 Material Properties Expected material properties shall be based on mean values of tested material properties. Lower-bound material properties shall be based on mean values of tested material properties minus one standard deviation, σ.

Nominal material properties, or properties specified in construction documents, shall be taken as lower-bound material properties unless otherwise specified in Chapters 8 through 12 and 14. Corresponding expected material properties shall be calculated by multiplying lower-bound values by appropriate factors specified in Chapters 8 through 12 and 14 to translate from lower-bound to expected values.

C7.5.1.4 Material Properties Where calculations are used to determine expected or lower-bound strengths of components, expected or lower-bound material properties, respectively, shall be used.

7.5.1.5 Component Capacities

7.5.1.5.1 General Detailed criteria for calculation of individual component force and deformation capacities shall comply with the requirements in individual materials chapters as follows:

1. Foundations: Chapter 8;
2. Components composed of steel or cast iron: Chapter 9;
3. Components composed of reinforced concrete: Chapter 10;
4. Components composed of reinforced or unreinforced masonry: Chapter 11;
5. Components composed of timber, cold-formed steel light frame, gypsum, or plaster products: Chapter 12;
6. Nonstructural (architectural, mechanical, and electrical) components: Chapter 13; and
7. Seismic isolation systems and energy dissipation systems: Chapter 14.

Elements and components composed of combinations of materials are covered in the chapters associated with each material.

7.5.1.5.2 Linear Procedures If linear procedures are used, capacities for deformation-controlled actions shall be defined as the product of *m*-factors, κ-factors, and expected strengths, Q_{CE}. Capacities for force-controlled actions shall be defined as lower-bound strengths, Q_{CL}, as summarized in Table 7-6.

7.5.1.5.3 Nonlinear Procedures If nonlinear procedures are used, component capacities for deformation-controlled actions shall be taken as permissible inelastic deformation limits. Component capacities for force-controlled actions shall be taken as lower-bound strengths, Q_{CL}, as summarized in Table 7-7.

Table 7-6. Calculation of Component Action Capacity: Linear Procedures

Parameter	Deformation Controlled	Force Controlled
Existing material strength	Expected mean value with allowance for strain-hardening	Lower-bound value (approximately mean value 1σ level)
Existing action capacity	$\kappa\, Q_{CE}$	$\kappa\, Q_{CL}$
New material strength	Expected material strength	Specified material strength
New action capacity	Q_{CE}	Q_{CL}

Table 7-7. Calculation of Component Action Capacity: Nonlinear Procedures

Parameter	Deformation Controlled	Force Controlled
Deformation capacity (existing component)	$\kappa \times$ Deformation limit	N/A
Deformation capacity (new component)	Deformation limit	N/A
Strength capacity (existing component)	N/A	$\kappa \times Q_{CL}$
Strength capacity (new component)	N/A	Q_{CL}

7.5.2 Linear Procedures

7.5.2.1 Forces and Deformations Component forces and deformations shall be calculated in accordance with linear analysis procedures of Sections 7.4.1 or 7.4.2.

7.5.2.1.1 Deformation-Controlled Actions for LSP or LDP Deformation-controlled actions, Q_{UD}, shall be calculated in accordance with Eq. (7-34):

$$Q_{UD} = Q_G + Q_E \tag{7-34}$$

where Q_E = Action caused by the response to the selected Seismic Hazard Level calculated using either Section 7.4.1 or Section 7.4.2;
Q_G = Action caused by gravity loads as defined in Section 7.2.2; and
Q_{UD} = Deformation-controlled action caused by gravity loads and earthquake forces.

C7.5.2.1.1 Deformation-Controlled Actions for LSP or LDP Because of possible anticipated nonlinear response of the structure, the actions as represented by Eq. (7-34) may exceed the actual strength of the component to resist these actions. The acceptance criteria of Section 7.5.2.2.1 take this overload into account through use of a factor, *m*, that is an indirect measure of the nonlinear deformation capacity of the component.

7.5.2.1.2 Force-Controlled Actions for LSP or LDP Force-controlled actions, Q_{UF}, shall be calculated using one of the following methods:

1. Q_{UF} shall be taken as the maximum action that can be developed in a component based on a limit-state analysis considering the expected strength of the components delivering force to the component under consideration, or the maximum action developed in the component as limited by the nonlinear response of the building.
2. Alternatively, Q_{UF} shall be calculated in accordance with Eq. (7-35).

$$Q_{UF} = Q_G \pm \frac{Q_E}{C_1 C_2 J} \tag{7-35}$$

where Q_{UF} = Force-controlled action caused by gravity loads in combination with earthquake forces; and
J = Force-delivery reduction factor, greater than or equal to 1.0, taken as the smallest demand capacity ratio (DCR) of the components in the load path delivering force to the component in question, calculated in accordance with Eq. (7-16).

Alternatively, values of J equal to 2.0 for a high level of seismicity, 1.5 for a moderate level of seismicity, and 1.0 for a low level of seismicity shall be permitted where not based on calculated DCRs. J shall be taken as 1.0 for the Immediate Occupancy Structural Performance Level.

In any case where the forces contributing to Q_{UF} are delivered by components of the seismic-force-resisting system that remain elastic, J shall be taken as 1.0.

C7.5.2.1.2 Force-Controlled Actions for LSP or LDP The basic approach for calculating force-controlled actions for evaluation or retrofit differs from that used for deformation-controlled actions because nonlinear deformations associated with force-controlled actions are not permitted. Therefore, force demands for force-controlled actions should not exceed the force capacity (strength).

Ideally, an inelastic mechanism for the structure is identified, and the force-controlled actions, Q_{UF}, for evaluation or retrofit are determined by limit analysis using that mechanism. This approach always produces a conservative estimate of the actions, even if an incorrect mechanism is selected. Where it is not possible to use limit (or plastic) analysis, or in cases where forces do not produce significant nonlinear response in the building, it is acceptable to determine the force-controlled actions for evaluation or retrofit using Eq. (7-35).

Coefficients C_1 and C_2 were introduced in Eq. (7-21) to amplify the base shear to achieve a better estimate of the maximum displacements expected for buildings responding in the inelastic range. Displacement amplifiers, C_1 and C_2, are divided out of Eq. (7-35) when seeking an estimate of the force level present in a component where the building is responding inelastically.

Because J is included for force-controlled actions, it may appear to be more advantageous to treat an action as force controlled where m-factors are less than J. However, proper application of force-controlled criteria requires a limit state analysis of demand and lower-bound calculation of capacity that yields a reliable result whether an action is treated as force or deformation controlled.

7.5.2.2 Acceptance Criteria for Linear Procedures

7.5.2.2.1 Acceptance Criteria for Deformation-Controlled Actions for LSP or LDP Deformation-controlled actions in primary and secondary components shall satisfy Eq. (7-36).

$$m\kappa Q_{CE} > Q_{UD} \tag{7-36}$$

where m = Component capacity modification factor to account for expected ductility associated with this action at the selected Structural Performance Level. m-factors are specified in Chapters 8 through 12 and 14;

Q_{CE} = Expected strength of component deformation-controlled action of an element at the deformation level under consideration. Q_{CE}, the expected strength, shall be determined considering all coexisting actions on the component under the loading condition by procedures specified in Chapters 8 through 14; and

κ = Knowledge factor defined in Section 6.2.4.

7.5.2.2.2 Acceptance Criteria for Force-Controlled Actions for LSP or LDP Force-controlled actions in primary and secondary components shall satisfy Eq. (7-37):

$$\kappa Q_{CL} > Q_{UF} \tag{7-37}$$

where Q_{CL} = Lower-bound strength of a force-controlled action of an element at the deformation level under consideration. Q_{CL}, the lower-bound strength, shall be determined considering all coexisting actions on the component under the loading condition by procedures specified in Chapters 8 through 12 and 14.

7.5.2.2.3 Verification of Analysis Assumptions for LSP or LDP In addition to the requirements in Section 7.2.14, the following verification of analysis assumptions shall be made.

Where moments caused by gravity loads in horizontally spanning primary components exceed 75% of the expected moment strength at any location, the possibility for inelastic flexural action at locations other than member ends shall be specifically investigated by comparing flexural actions with expected member strengths. Where linear procedures are used, formation of flexural plastic hinges away from member ends shall not be permitted.

7.5.3 Nonlinear Procedures

7.5.3.1 Forces and Deformations Component forces and deformations shall be calculated in accordance with nonlinear analysis procedures of Sections 7.4.3 or 7.4.4.

7.5.3.2 Acceptance Criteria for Nonlinear Procedures

7.5.3.2.1 Acceptance Criteria for Deformation-Controlled Actions for NSP or NDP Primary and secondary components shall have expected deformation capacities not less than maximum deformation demands calculated at target displacements. Primary and secondary component demands shall be within the acceptance criteria for nonlinear components at the selected Structural Performance Level. Expected deformation capacities shall be determined considering all coexisting forces and deformations in accordance with Chapters 8 through 14.

C7.5.3.2.1 Acceptance Criteria for Deformation-Controlled Actions for NSP or NDP Where all components are explicitly modeled with full backbone curves, the NSP or NDP can be used to evaluate the full contribution of all components to the seismic force resistance of the structure as they degrade to residual strength values. Where degradation is explicitly evaluated in the analysis, components can be relied upon for lateral-force resistance out to the secondary component limits of response.

Studies on the effects of different types of strength degradation are presented in FEMA 440 (2005). As components degrade, the post-yield slope of the force–displacement curve becomes negative. The strength ratio, μ_{max}, limits the extent of degradation based on the degree of negative post-yield slope.

7.5.3.2.2 Acceptance Criteria for Force-Controlled Actions for NSP or NDP Primary and secondary components shall have lower-bound strengths not less than the maximum analysis forces. Lower-bound strengths shall be determined considering all coexisting forces and deformations by procedures specified in Chapters 8 through 12 and 14.

7.5.3.2.3 Verification of Analysis Assumptions for NSP or NDP In addition to the requirements in Section 7.2.14, the following verification of analysis assumptions shall be made:

Flexural plastic hinges shall not form away from component ends unless they are explicitly accounted for in modeling and analysis.

7.6 ALTERNATIVE MODELING PARAMETERS AND ACCEPTANCE CRITERIA

It shall be permitted to derive required parameters and acceptance criteria using the experimentally obtained cyclic response characteristics of a subassembly, determined in accordance with this section. Where relevant data on the inelastic force–deformation behavior for a structural subassembly are not available, such data shall be obtained from experiments consisting of physical tests of representative subassemblies as specified in this section. Approved independent review of this process shall be conducted.

C7.6 ALTERNATIVE MODELING PARAMETERS AND ACCEPTANCE CRITERIA

This section provides guidance for developing appropriate data to evaluate construction materials and detailing systems not specifically addressed by this standard. This standard specifies stiffnesses, m-factors, strengths, and deformation capacities for a wide range of components. To the extent practical, this standard

has been formatted to provide broad coverage of various common construction types present in the national inventory of buildings. However, it is fully anticipated that in the course of evaluating and retrofitting existing buildings, construction systems and component detailing practices that are not specifically covered by this standard will be encountered. Furthermore, it is anticipated that new methods and materials, not currently in use, will be developed that may have direct application to building retrofit. This section provides a method for obtaining the needed analysis parameters and acceptance criteria for elements, components, and construction details not specifically included in this standard.

The approach taken in this section is similar to that used to derive the basic analysis parameters and acceptance criteria contained in this standard for various components, except that no or incomplete experimentation has been performed. The required force deformation curves were derived by developers of this standard, either directly from research testing available in the literature or based on the judgment of engineers knowledgeable about the behavior of the particular materials and systems.

7.6.1 Experimental Setup Each tested subassembly shall be an identifiable portion of the structural element or component, the stiffness of which is required to be modeled as part of the structural analysis process. The objective of the experiment shall be to estimate the seismic-force-displacement relationships (stiffness) for the subassemblies at different loading increments, together with the strength and deformation capacities for the desired Structural Performance Levels. These properties shall be used in developing an analytical model of the structure to calculate its response to selected earthquake shaking and other hazards, and in developing acceptance criteria for strength and deformations. The limiting strength and deformation capacities shall be determined from an experimental program using the average values of a minimum of three tests performed for the same configuration and test conditions.

The experimental setup shall replicate the construction details, support and boundary conditions, and loading conditions expected in the building. The loading shall consist of fully reversed cyclic loading at increasing displacement levels, with the number of cycles and displacement levels based on expected response of the structure to the selected Seismic Hazard Level. Increments shall be continued until the subassembly exhibits complete failure, characterized by the loss of seismic force and gravity load resistance.

C7.6.1 Experimental Setup This standard requires performing a minimum of three separate tests of each unique subassembly. This amount is required because there can be considerable variation in the results of testing performed on "identical" specimens, just as there is inherent variability in the behavior of actual components in buildings. The use of multiple test data allows some of the uncertainty with regard to actual behavior to be defined.

A specific testing protocol has not been recommended, as selection of a suitable protocol depends on the anticipated failure modes and sequences of the subassembly and the character of excitation it is expected to experience in the real structure. In one widely used protocol, the Applied Technology Council's *Guidelines for Seismic Testing of Components of Steel Structures* (ATC 1992), the specimen is subjected to a series of quasistatic, fully reversed cyclic displacements that are incremented from displacement levels corresponding to elastic behavior, to those at which failure of the specimen occurs. Other protocols that entail fewer or more cycles of displacement, and more rapid loading rates, have also been used. In selecting an appropriate test protocol, it is important that sufficient increments of loading be selected to adequately characterize the force–deformation behavior of the subassembly throughout its expected range of performance. Tests should always proceed to a failure state, so that the margin against failure of the subassembly can be understood.

If the structure is likely to be subjected to strong impulsive ground motions, such as those that are commonly experienced within a few kilometers of the fault rupture, consideration should be given to using a protocol that includes one or more large displacements at the initiation of the loading to simulate the large initial response induced by impulsive motion. Alternatively, a single monotonic loading to failure may be useful as a performance measure and forming a capacity boundary curve for subassemblies representing components in structures subject to impulsive motion.

Modeling and acceptance criteria in Section 7.6.3 are derived from a backbone curve constructed to fit the test results. The backbone curve generally uses cyclic test results, and the resulting curve depends on the test loading protocol. Therefore, it is important that careful consideration be given to the protocols that best simulate actual expected seismic demands and subassembly behavior under cyclic and pulse-type loading.

Monotonic test data are useful for certain impulse loadings or some near-fault excitations, because one-sided inelastic response could be expected for these applications. Monotonic test data may also be useful for some older systems, where it is the only available experimental data. For this latter case, the monotonic test results may suggest significantly greater strength and inelastic deformation capacity and significantly less deterioration in strength and stiffness than would be observed in cyclic tests. There are multiple reasons for this, but three clear examples are significant tensile cracking of concrete, fracture of steel, and buckling of steel.

When large tensile cracks form in concrete, the internal rebar elongates, but upon cyclic reversal, the bars deform in compression, possibly causing local damage to the rebar, spalling of concrete, or other effects. Many steel elements, particularly welds, have been shown to fail because of low cycle fatigue. This phenomenon is not generally characterized by monotonic testing because it requires load reversal to initiate the fatigue crack. Buckling of steel elements may locally deform in compression, and cracks, tears, and ultimate fracture may occur when the damaged steel is subjected to reversed tensile loading. These local damages may significantly reduce the inelastic deformation capacity and resistance and increase the deterioration noted in the system. As a result, if only monotonic data are available, they should be used with consideration of consequences of in-cycle strength degradation and pulse-type scenarios, and if possible additional test data should be obtained.

The following references should be used to assist with determining the appropriate loading protocols for each subassembly condition: FEMA P-440A (2009a), FEMA P-695 (2009b), and PEER/ATC 72-1 (2010).

7.6.2 Data Reduction and Reporting A report shall be prepared for each experiment. The report shall include the following:

1. Description of the subassembly being tested;
2. Description of the experimental setup, including the following:
   2.1. Details on fabrication of the subassembly,
   2.2. Location and date of testing,
   2.3. Description of instrumentation used,

2.4. Name of the person in responsible charge of the test, and
2.5. Photographs of the specimen, taken before testing;

3. Description of the loading protocol used, including the following:
   3.1. Increment of loading (or deformation) applied,
   3.2. Rate of loading application, and
   3.3. Duration of loading at each stage;
4. Description, including photographic documentation, and limiting deformation value for all important behavior states observed during the test, including the following, as applicable:
   4.1. Elastic range with effective stiffness reported,
   4.2. Plastic range,
   4.3. Onset of visible damage,
   4.4. Loss of seismic-force-resisting capacity,
   4.5. Loss of vertical-load-resisting capacity,
   4.6. Force–deformation plot for the subassembly (noting the various behavior states), and
   4.7. Description of limiting behavior states defined as the onset of specific damage mode, change in stiffness or behavior (such as initiation of cracking or yielding), and failure modes.

C.7.6.2 Data Reduction and Reporting It is important that data from experimental programs be reported in a uniform manner so that the performance of different subassemblies may be compared. The data reporting requirements specified are the minimum thought to be adequate to allow development of the required analysis parameters and acceptance criteria for the various evaluation and retrofit procedures Some engineers and researchers may desire additional data from the experimentation program to allow calibration of analytical models and to permit improved understanding of the probable behavior of the subassemblies in real structures.

7.6.3 Analysis Parameters and Acceptance Criteria for Subassemblies Based on Experimental Data The following procedure shall be followed to develop structural modeling parameters and acceptance criteria for subassemblies based on experimental data.

1. An idealized force–deformation curve shall be developed from the experimental data for each experiment and for each direction of loading with unique behavior. The curve shall be plotted in a single quadrant (positive force versus positive deformation, or negative force versus negative deformation). In cases where deformation components (e.g., flexure or shear) are modeled separately, test instrumentation must be provided to enable force–deformation curves for each deformation component to be derived from the overall test force–deformation relations. The curves shall be constructed as follows:
   1.1. The appropriate quadrant of data shall be taken from the seismic-force-deformation plot from the experimental report.
   1.2. A smooth "backbone" curve shall be drawn through each point of peak displacement during the first cycle of each increment of loading (or deformation), as indicated in Fig. 7-5.
   1.3. The backbone curve so derived shall be approximated by a series of linear segments, drawn to form a multisegmented curve conforming to one of the types indicated in Fig. 7-4.
2. The multilinear curves derived for all experiments involving the subassembly shall be compared, and an average multilinear representation of the subassembly behavior shall be derived based on these curves. Each segment of the composite curve shall be assigned the average stiffness (either positive or negative) of the similar segments in the multilinear curves for the various experiments. Each segment on the composite curve shall terminate at the average of the deformation levels at which the similar segments of the multilinear curves for the various experiments terminate.

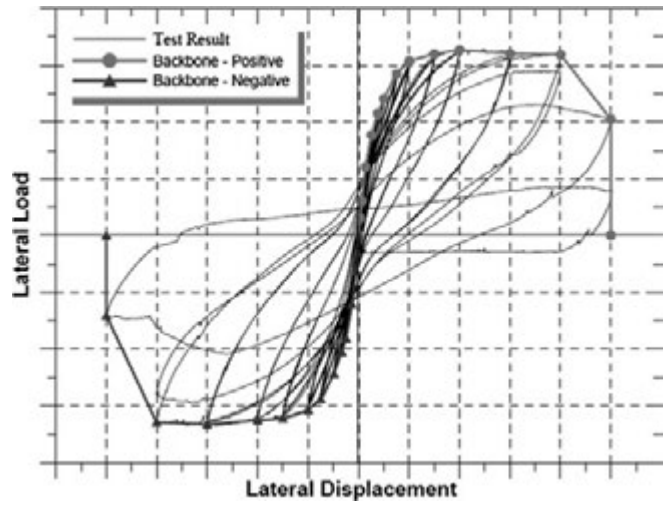

FIG. 7-5. Backbone Curve for Experimental Data

3. The stiffness of the subassembly for use in linear procedures shall be taken as the slope of the first segment of the composite curve. The composite multilinear force–deformation curve shall be used for modeling in nonlinear procedures.
4. For the purpose of determining acceptance criteria, subassembly actions shall be classified as being either force controlled or deformation controlled. Subassembly actions shall be classified as force controlled unless any of the following applies:

   The full backbone curve, including strength degradation and residual strength, is modeled; the composite multilinear force–deformation curve for the subassembly, determined in accordance with requirements in paragraph 2, conforms to either Type 1, Type 2, or Type 3 as indicated in Fig. 7-4; and the component action is classified as deformation-controlled in accordance with Section 7.5.1.2.
5. The strength capacity, Q_{CL}, for force-controlled actions evaluated using either the linear or nonlinear procedures shall be taken as the mean minus one standard deviation strength Q_{yL} determined from the series of representative subassembly tests.
6. The acceptance criteria for deformation-controlled actions used in nonlinear procedures shall be the deformations corresponding with the following points on the curves of Fig. 7-6:
   6.1. Immediate Occupancy:
      The deformation at which permanent, visible damage occurred in the experiments but not greater than 0.67 times the deformation limit for Life Safety specified in item 7.2.1 below.
   6.2. Life Safety:
      0.75 times the deformation at point E.
   6.3. Collapse Prevention:
      1.0 times the deformation at point E on the curve.

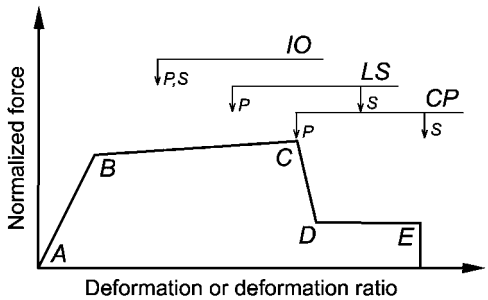

FIG. 7-6. Acceptance Criteria Illustration

7. The *m*-factors used as acceptance criteria for deformation-controlled actions in linear procedures shall be determined as follows: (a) obtain the deformation acceptance criteria given in items 7.1 through 7.3; (b) then obtain the ratio of this deformation to the deformation at yield, represented by the deformation parameter B in the curves shown in Fig. 7-6; (c) then multiply this ratio by a factor 0.75 to obtain the acceptable *m*-factor.
   - 7.1. Immediate Occupancy: Primary and secondary components

     The deformation at which permanent, visible damage occurred in the experiments but not greater than 0.67 times the deformation limit for Life Safety specified in item 7.2.1 below.
   - 7.2. Primary components:
     - 7.2.1. Life Safety: 0.75 times the deformation at point C on the curves.
     - 7.2.2. Collapse Prevention: The deformation at point C on the curves but not greater than 0.75 times the deformation at point E.
   - 7.3. Secondary components:
     - 7.3.1. Life Safety: 0.75 times the deformation at point E.
     - 7.3.2. Collapse Prevention: 1.0 times the deformation at point E on the curve.
8. Where performing NDP requires additional hysteretic parameters to define the expected behavior of the component, e.g., reloading, degradation, self-centering, or pinching behavior, the mathematical model of the component shall result in reasonable agreement between the shape of the nominal and test hysteresis loop for each component type and the dissipated hysteretic energy. The modeled hysteresis should be checked against the measured hysteresis throughout the range of expected deformation demands. Separate properties shall be computed for the lower selected Seismic Hazard Level displacements and also the higher selected Seismic Hazard Level displacements where warranted.

The above requirements do not apply to buildings using seismic isolation and energy dissipation systems. See Chapter 14 for the specific requirements of these systems.

C7.6.3 Analysis Parameters and Acceptance Criteria for Subassemblies Based on Experimental Data A multistep procedure for developing design parameters and acceptance criteria for use with both the linear and nonlinear procedures is provided. The basic approach consists of the development of an approximate story seismic-force-deformation curve and gravity-load resistance curve for the subassembly, based on the experimental data.

In developing the representative story lateral-force-deformation curve from the experimentation, use of a backbone curve is required. This curve takes into account, in an approximate manner, the strength and stiffness deterioration commonly experienced by structural components. The backbone curve is defined by points given by the intersection of an unloading branch and the loading curve of the next load cycle that goes to a higher level of displacement, as illustrated in Fig. 7-5.

CHAPTER 8
FOUNDATIONS AND GEOLOGIC SITE HAZARDS

8.1 SCOPE

This chapter sets forth general requirements for consideration of foundation load-deformation characteristics, seismic evaluation and retrofit of foundations, and mitigation of geologic site hazards.

Section 8.2 specifies data collection for site characterization and defines geologic site hazards. Section 8.3 outlines procedures for mitigation of geologic site hazards. Section 8.4 provides soil strength and stiffness parameters for consideration of foundation load-deformation characteristics. Section 8.5 specifies procedures for consideration of soil–structure interaction (SSI) effects. Section 8.6 specifies seismic earth pressures on building walls. Section 8.7 specifies requirements for seismic retrofit of foundations.

C8.1 SCOPE

This chapter provides geotechnical engineering provisions for building foundations and seismic–geologic site hazards. Acceptance criteria for the behavior of the foundation system and foundation soils for a given Performance Level are provided for shallow foundations and shall be considered in addition to the behavior assessment of the superstructure. Deep foundation acceptability is measured through its impact on the superstructure assessment.

Geotechnical requirements for buildings that are suitable for deficiency-based evaluation and retrofit are included in Chapter 5. Structural engineering issues of foundation systems are discussed in the chapters on steel (Chapter 9), concrete (Chapter 10), masonry (Chapter 11), and wood and light metal framing (Chapter 12).

8.2 SITE CHARACTERIZATION

Site characterization shall include collection of information on the building foundation as specified in Section 8.2.1 and on seismic–geologic site hazards as specified in Section 8.2.2.

C8.2 SITE CHARACTERIZATION

The guidance of the authorities having jurisdiction over historical matters should be obtained if historic or archaeological resources are present at the site.

8.2.1 Foundation Information Information on the foundation supporting the building to be evaluated or retrofit, nearby foundation conditions, design foundation loads, and load-deformation characteristics of the foundation soils shall be obtained as specified in Sections 8.2.1.1 through 8.2.1.3.

8.2.1.1 Foundation Conditions

8.2.1.1.1 Structural Foundation Information The following structural information shall be obtained for the foundation of the building to be evaluated or retrofit in accordance with the data collections requirements of Section 6.2:

1. Foundation type;
2. Foundation configuration, including dimensions and locations; and
3. Material composition and details of construction.

C8.2.1.1.1 Structural Foundation Information Foundation types may consist of shallow isolated, combined, or continuous spread footings, mat foundations, deep foundations of driven piles, cast-in-place concrete piers, auger-cast piles, and intermediate foundations such as shallow foundations on rammed aggregate piers.

Foundation configuration information includes dimensions and locations, depths of embedment of shallow foundations, pile–shaft tip elevations, and variations in cross section along the length of the pile for tapered piles and belled caissons.

Foundation material types include concrete, steel, and wood. Foundation installation methods include cast-in-place and open- or closed-end driving.

8.2.1.1.2 Subsurface Soil Conditions The following information on subsurface soil conditions shall be obtained as required for the selected performance objectives unless the presumptive values are used:

1. For Performance Objectives that include Collapse Prevention, Limited Safety, and Life Safety Performance Levels, the type, composition, consistency, relative density, and layering of soils shall be determined to a depth at which the stress imposed by the building is less than or equal to 10% of the building weight divided by the total foundation area. For buildings with friction piles, the minimum depth of investigation shall be based on the assumption that the building load is placed at a depth equal to two-thirds of the pile length. For end-bearing piles, the minimum depth of investigation shall be greater than the pile length plus five pile diameters. The location of the water table and its seasonal fluctuations beneath the building shall be determined.
2. For Damage Control and Immediate Occupancy Performance Level, the following properties shall be determined for each soil layer that contributes significantly to the foundation capacity and load-deflection behavior: unit weight, γ; the effective stress friction angle, ϕ'; the undrained shear strength of clays, s_u; soil compressibility characteristics; small-strain soil shear modulus, G_{max}; and Poisson's ratio,

v. The effect of changes in the effective stress on the shear strength, friction angle, and shear modulus shall be considered.

C8.2.1.1.2 Subsurface Soil Conditions Prescriptive procedures may be used to estimate the ultimate bearing capacity of the foundations. However, additional information is required for site-specific assessments of foundation bearing capacity and stiffness. Acquiring this additional information involves determining unit weights, shear strength, friction angle, compressibility characteristics, and soil moduli.

Specific foundation information developed for an adjacent or nearby building may be useful if subsurface soils and groundwater conditions in the site region are known to be uniform. However, less confidence will result if subsurface data are developed from anywhere but the site of the building being evaluated or retrofit. Adjacent sites where construction has been done recently may provide a guide for evaluation of subsurface conditions at the site being considered. Sources of existing geotechnical information are discussed in Section C3.2.4.

8.2.1.2 Design Foundation Loads Information on the design foundation loads shall be obtained, including separate information on dead loads and live loads. Alternatively, the design foundation loads shall be calculated where information on the design foundation loads is not available.

8.2.1.3 Load-Deformation Characteristics under Seismic Loading Load-deformation characteristics of foundations in the vertical, lateral, and rocking directions shall be obtained from geotechnical reports or shall be determined in accordance with the requirements of Section 8.4.

C8.2.1.3 Load-Deformation Characteristics under Seismic Loading Traditional geotechnical engineering treats load-deformation characteristics for long-term dead loads plus frequently applied live loads only. In most cases, long-term settlement governs foundation design. Short-term (earthquake) load-deformation characteristics have at times been used for design; however, such relationships may not be found in the older geotechnical reports for existing buildings. The use of long-term loads for earthquake performance assessment may lead to an underestimation of system stiffness; the requirements in Section 8.4 or further geotechnical investigation may be more suitable for short-term loads.

8.2.2 Seismic–Geologic Site Hazards Seismic evaluation and retrofit shall include an assessment of earthquake-induced hazards at the site caused by fault rupture, liquefaction, differential settlement, compaction, landsliding, and an assessment of earthquake-induced flooding or inundation in accordance with Sections 8.2.2.1 through 8.2.2.5. The earthquake-induced hazards shall be assessed at Seismic Hazard Levels being considered in the structural and nonstructural evaluation or retrofit of the building.

Where geologic hazards are identified based on published maps, literature research, or by any other assessment, an in situ geotechnical investigation shall be performed to identify the characteristics of that hazard and to determine soil stiffness and strength characteristics.

If the resulting ground movements cause unacceptable performance in the building for the selected Performance Level, then the hazards shall be mitigated in accordance with Section 8.3.

C8.2.2 Seismic–Geologic Site Hazards Geologic site hazards are a function of the seismic hazard and the site conditions. Some hazards may only be relevant during very strong seismic shaking. Therefore, the hazards must be assessed under the same Seismic Hazard Level for which the building is being analyzed.

Initially there may be maps or other published reports to indicate that a specific site may be susceptible to earthquake-induced geologic hazards such as liquefaction, fault rupture, or landsliding. If there is any indication that there might be the potential for any of the geologic site hazards listed in this section at a building site, a geotechnical investigation that includes in situ sampling should be performed. The purpose of that in situ geotechnical investigation is to determine with greater accuracy the potential for and extent of geologic site hazards present.

8.2.2.1 Fault Rupture A geologic fault shall be defined as a plane or zone along which earth materials on opposite sides have moved differentially in response to tectonic forces.

Geologic site information shall be obtained to determine if an active geologic fault is present under the building foundation. If a fault is present, the following information shall be obtained:

1. The degree of activity based on the age of the most recent movement and earthquake rate;
2. The fault type (i.e., strike-slip, normal, reverse, or oblique fault);
3. The width and distribution of the fault-rupture zone;
4. The orientation of slip with respect to building geometry; and
5. Magnitudes of vertical and/or horizontal displacements consistent with the selected Seismic Hazard Level.

C8.2.2.1 Fault Rupture Buildings that straddle active faults should be assessed to determine if retrofit is warranted, possibly to reduce the collapse potential of the structure given the likely amount and direction of fault displacement.

8.2.2.2 Liquefaction Liquefaction is defined as a process in which saturated, loose, granular soils lose shear strength and shear stiffness as a result of an increase in pore water pressure during earthquake shaking or other rapid loading.

Subsurface soil and groundwater information including soil type, soil plasticity, soil density or consistency, soil stratigraphy, and depth to water table, shall be obtained to determine if liquefiable materials are present under the building foundation. If liquefiable soils are present, the following information shall be obtained to perform relevant liquefaction analyses: ground surface slope and proximity of free-face conditions. Relevant liquefaction analyses include lateral spreading, liquefaction-induced settlement, posttriggering slope stability, liquefaction-induced bearing capacity failure, and flotation of buried structures.

A site shall be regarded as nonliquefiable if the site soils meet any of the following criteria:

1. The geologic materials underlying the site are either bedrock or have very low liquefaction susceptibility, according to the liquefaction susceptibility ratings based upon the type of deposit and its geologic age, as shown in Table 8-1;
2. The soils underlying the site are stiff to hard clays or clayey silts;
3. The soils, if fine-grained, are not highly sensitive, based on local experience;
4. The soils are cohesionless with a minimum normalized standard penetration test (SPT) resistance, $(N_1)_{60}$, value of 30 blows/0.3 m (30 blows/ft), as defined in ASTM D1586, for depths below the groundwater table;
5. The soils have a clay content greater than 20% and liquid limit greater than 35; or

Table 8-1. Estimated Susceptibility to Liquefaction of Surficial Deposits During Strong Ground Shaking

Type of Deposit	General Distribution of Cohesionless Sediments in Deposits	Likelihood that Cohesionless Sediments, When Saturated, Would Be Susceptible to Liquefaction (by Geologic Age)			
		Modern < 500 years	Holocene < 11,000 years	Pleistocene < 2 million years	Pre-Pleistocene > 2 million years
(a) Continental Deposits					
River channel	Locally variable	Very high	High	Low	Very low
Flood plain	Locally variable	High	Moderate	Low	Very low
Alluvial fan, plain	Widespread	Moderate	Low	Low	Very low
Marine terrace	Widespread	—	Low	Very low	Very low
Delta, fan delta	Widespread	High	Moderate	Low	Very low
Lacustrine, playa	Variable	High	Moderate	Low	Very low
Collovium	Variable	High	Moderate	Low	Very low
Talus	Widespread	Low	Low	Very low	Very low
Dune	Widespread	High	Moderate	Low	Very low
Loess	Variable	High	High	High	Unknown
Glacial till	Variable	Low	Low	Very low	Very low
Tuff	Rare	Low	Low	Very low	Very low
Tephra	Widespread	High	Low	Unknown	Unknown
Residual soils	Rare	Low	Low	Very low	Very low
Sebka	Locally variable	High	Moderate	Low	Very low
(b) Coastal Zone Deposits					
Delta	Widespread	Very high	High	Low	Very low
Esturine	Locally variable	High	Moderate	Low	Very low
Beach, high energy	Widespread	Moderate	Low	Very low	Very low
Beach, low energy	Widespread	High	Moderate	Low	Very low
Lagoon	Locally variable	High	Moderate	Low	Very low
Foreshore	Locally variable	High	Moderate	Low	Very low
(c) Fill Materials					
Uncompacted fill	Variable	Very high	—	—	—
Compacted fill	Variable	Low	—	—	—

NOTE: Adapted from Youd and Perkins 1978.

6. The groundwater table is at least 35 ft below the deepest foundation depth, or 50 ft below the ground surface, whichever is shallower, including considerations for seasonal and historic groundwater level rises, and any slopes or free-face conditions in the vicinity do not extend below the groundwater elevation at the site.

If soils susceptible to liquefaction are present at the site, then an evaluation of the triggering of liquefaction and of the effects of liquefaction to the building shall be performed using procedures set forth in Sections 8.2.2.2.1 and 8.2.2.2.2, or any other procedure that sufficiently captures all consequences of site liquefaction.

C8.2.2.2 Liquefaction Soil liquefaction is a phenomenon in which a soil below the groundwater table loses a substantial amount of strength and stiffness because of strong earthquake ground shaking or other rapid loading. Recently deposited (i.e., geologically young) and relatively loose natural soils and uncompacted or poorly compacted fill soils are potentially susceptible to liquefaction. Loose sands and silty sands are particularly susceptible; loose silts and gravels also can liquefy. Dense natural soils and well-compacted fills have low susceptibility to liquefaction. High-plasticity fine-grained soils are generally not susceptible, except for highly sensitive clays found in some geographic regions.

Liquefaction analysis of level or mildly sloping ground consists of the following steps: 1, liquefaction susceptibility based on soil characteristics and water table depth; 2, liquefaction triggering (or potential) based on soil capacity (liquefaction resistance) and seismic demand (cyclic stress ratio); and 3, evaluation of consequences of liquefaction, e.g., lateral spreading and liquefaction-induced settlement. When a building is located adjacent to a slope or retaining structure, an analysis of liquefaction of sloping ground may be required. This process consists of the following steps: 1, liquefaction susceptibility to define contractive (strain-softening) soils; 2, liquefaction triggering; and 3, posttriggering stability.

Liquefaction susceptibility of level and mildly sloping ground. Specific soil and water conditions determine whether a soil is susceptible to being liquefied under rapid loading. These conditions include the following:

1. Deposit type and age. These criteria are described in Table 8-1.
2. Soil type. Generally, soils with plasticity indices less than about 10 (coarse-grained gravelly sands, sands, silty sands, and nonplastic silts, as well as lean clayey silts and silty clays) are susceptible to liquefying, depending on the seismic demand.
3. Soil density or consistency. Coarse-grained, nonplastic soils are not susceptible to liquefaction if they are dense to very dense. Lean, fine-grained soils generally are not susceptible to liquefaction if they are stiff to hard (i.e., if they have low water content).
4. Depth to water table. Only saturated soils are susceptible to liquefaction. Furthermore, if the water table is consider-

ably below the foundation or ground surface, liquefaction effects are unlikely to manifest at the surface or affect the overlying structure.

Liquefaction triggering using cyclic stress procedure for level and mildly sloping ground. The potential for liquefaction to occur depends on both the soil capacity (or liquefaction resistance) and the seismic demand. Although various methods are available to evaluate liquefaction triggering (Youd et al. 2001), the most commonly used approach is the empirical cyclic stress Idriss method, proposed by Seed and Idriss (1971) and Whitman (1971). The state of practice using the cyclic stress method is described by Youd et al. (2001). The current version of the procedure uses the standard penetration test (SPT) blow count, cone penetration test (CPT) tip resistance, or shear wave velocity (V_s) to evaluate liquefaction resistance, although SPT or the combination of CPT and SPT are widely preferred. Using penetration resistance (rather than shear wave velocity) to assess liquefaction potential is considered a reasonable engineering approach because many of the factors that affect penetration resistance affect liquefaction resistance of sandy soils similarly, and because the cyclic stress method is based on the observed performance of soil deposits during worldwide historical earthquakes (Youd et al. 2001; Cetin et al. 2004; and Idriss and Boulanger 2008). Idriss and Boulanger (2008) provide an updated perspective on evaluation of triggering, consequences, and mitigation of soil liquefaction during earthquakes.

Lateral spreading of level and mildly sloping ground. Lateral spreads are ground-failure phenomena that can occur on level ground adjacent to shallow declivities (i.e., river banks) or mildly sloping ground (generally, slopes less than 6%) underlain by liquefied soil. Earthquake ground shaking affects the stability of mildly sloping ground containing liquefiable soils as the combined seismic inertia forces and static shear stresses exceed the strength of the liquefiable soils. Temporary instability manifests as lateral downslope movement that can potentially involve large land areas. For the duration of ground shaking associated with moderate to large earthquakes, there could be many such occurrences of temporary instability, producing an accumulation of downslope movement. The resulting movements can range from a few inches or less to tens of feet, and they are characterized by breaking up of the ground and horizontal and vertical offsets.

Methods to evaluate lateral spreading displacements include empirical, semiempirical, and numerical. The most widely used empirical procedure is that proposed by Bartlett and Youd (1992) and updated by Youd et al. (2002). This procedure estimates lateral displacements as a function of strength of shaking (magnitude and peak ground acceleration) and characteristics of loose sediments (thickness, grain size, and fines content of sandy soils with normalized SPT blow count less than 15). Other empirical methods include those proposed by Rauch and Martin (2000) and Bardet et al. (2002). Various semiempirical methods based on laboratory measurements of shear strain have been proposed by Ishihara and Yoshimine (1992), Zhang et al. (2004), and Idriss and Boulanger (2008). Olson and Johnson (2008) proposed a semiempirical method that uses a Newmark sliding-block analysis in conjunction with the liquefied shear strength ratio proposed by Olson and Stark (2002), which allows the use of site-specific ground motions to estimate lateral displacements. Updike et al. (1988), Egan et al. (1992), and USACE (1995) previously proposed similar approaches. In addition to these empirical and semiempirical procedures, more complex numerical deformation analyses can be performed using various constitutive models, including UBCsand (Beaty and Byrne 1998; Puebla 1999), Norsand (Jefferies and Been 2006), or the effective-stress model proposed by Yang et al. (2003) Idriss and Boulanger (2008) describe a method for integration of strain potential to determine a lateral displacement index for lateral spreading.

Liquefaction-induced settlement of level and mildly sloping ground. Liquefaction involves the generation of excess pore-water pressure. As these pore-water pressures dissipate, the liquefied soil reconsolidates and surface settlements occur. Differential settlements commonly occur because of lateral variations in soil stratigraphy and density. These differential settlements can be quite large, particularly when influenced by lateral spreading or bearing capacity failure. Settlements may range from a few inches where thin layers liquefy to a few feet where thick, loose soil deposits liquefy.

Several semiempirical methods are available to estimate liquefaction-induced settlements, including Tokimatsu and Seed (1987), Ishihara and Yoshimine (1992), and Zhang et al. (2002). These methods are largely based on laboratory-measured volumetric or axial strains associated with pore-water pressure dissipation. Dashti et al. (2010) discuss the influence of shallow building foundations on liquefaction-induced settlements, but this approach is not routine and should be carried out by a geotechnical specialist.

Liquefaction-induced lateral earth pressures on level ground. Liquefaction of soils adjacent to building walls increases the lateral earth pressures against the wall. The lateral earth pressure can be approximated as a fluid pressure having a unit weight equal to the saturated unit weight of the soil plus the inertial forces on the soil equal to the hydrodynamic pressure by using the Westergaard procedure described in Ebeling and Morrison (1992) or another procedure.

Evaluating potential for flotation of buried structures below level ground. A common phenomenon accompanying liquefaction is the flotation of tanks or structures that are embedded in liquefied soil. The potential for flotation of a buried or embedded structure can be evaluated by comparing the total weight of the buried or embedded structure with the increased uplift forces occurring because of the generation of liquefaction-induced pore-water pressures.

Liquefaction susceptibility of sloping ground. Flow liquefaction can occur in liquefied soils subjected to static driving shear stress larger than the liquefied shear strength, e.g., ground slopes greater than 6%, below embankments, or below building foundations, and can involve displacements ranging from a few feet to hundreds of feet or more. Liquefaction susceptibility in sloping ground involves evaluating whether contractive (strain-softening) soils are present below the structure and can be accomplished by comparing penetration resistance to threshold penetration resistances by using the thresholds proposed by Ishihara (1993), Baziar and Dobry (1995), or Olson and Stark (2003). If soils susceptible to liquefaction are not present, flow liquefaction is not possible.

Liquefaction triggering of sloping ground. If susceptible soils are present, liquefaction triggering analyses must be performed. Liquefaction triggering can be evaluated in terms of yield strength ratios, as proposed by Olson and Stark (2003), or by applying sloping ground and overburden stress corrections (K_α and K_σ, respectively) as proposed by Seed and Harder (1990), Seed et al. (2003), and Idriss and Boulanger (2008). However, these approaches involve considerable uncertainties and should be carried out by a geotechnical specialist.

Posttriggering stability. If liquefaction is triggered in sloping ground, the potential for a flow slide can be evaluated using conventional limit equilibrium slope stability using an approach that satisfies force and moment equilibrium (e.g., the Morgen-

stern and Price, Spencer, or generalized limit equilibrium methods). The liquefied soils should be assigned a liquefied shear strength for the stability analysis. The liquefied shear strength can be assigned using the recommendations from Seed and Harder (1990) or Olson and Stark (2002). Such calculations should be carried out by a geotechnical specialist.

Posttriggering bearing capacity failure. The occurrence of liquefaction in soils supporting foundations can result in bearing capacity failures and large, plunging-type settlements. In fact, any buildup of pore-water pressures in a soil still reduces soil strength (i.e., softens the soil) and decreases the bearing capacity.

The potential for bearing capacity failure beneath a spread footing or mat foundation depends on the depth of the liquefied (or softened liquefied) layer below the footing, the size of the footing or mat, and the applied load (including any eccentricity in the applied load). If lightly loaded small footings are located sufficiently above the depth of liquefied materials, bearing capacity failure may not occur. The foundation-bearing capacity for a case where a footing or mat is located some distance above a liquefied layer can be assessed by evaluating using the liquefied shear strength (Seed and Harder 1990 and Olson and Stark 2002), softened shear strengths, and/or drained or undrained shear strength of nonliquefied strata (as appropriate), then applying bearing capacity formulations for layered systems (e.g., Meyerhof 1974, Hanna and Meyerhof 1980, and Hanna 1981). The capacity of friction pile or pier foundations can be similarly assessed based on the strengths of the liquefied, softened liquefied, and nonliquefied strata penetrated by the foundations. Such calculations involve considerable uncertainties and should be carried out by a geotechnical specialist.

Lateral earth pressures imposed by lateral-spreading or flowing ground. During lateral spreading or flow failures, large lateral forces can be applied to building foundations, causing lateral movement of the structure or significant damage to pile foundations. There are no widely accepted methods to evaluate lateral spreading forces, although some techniques are available. As a result, such calculations involve considerable uncertainties and should be carried out by a geotechnical specialist.

8.2.2.2.1 Liquefaction-Affected Structural Evaluation To assess the implications of liquefaction on a structure, two seismic analyses of the structure shall be performed. The first analysis shall be in accordance with Chapter 7, assuming that liquefaction has not occurred at the site. The mathematical model of the structure shall assume a flexible foundation condition; fixed-base modeling of the foundation is not permitted. In this analysis, the site response parameters and the foundation stiffness and strength shall not be reduced because of liquefaction.

The second analysis shall be in accordance with Chapter 7, but the seismic hazard parameters, site response spectrum, or acceleration response histories shall be modified based on the effects of soil liquefaction. The mathematical model of the structure shall not assume a fixed foundation condition, and the strength and stiffness parameters for the foundation shall be reduced because of the occurrence of liquefaction under the Seismic Hazard Level being considered in the evaluation or retrofit.

C8.2.2.2.1 Liquefaction-Affected Structural Evaluation Soil liquefaction can significantly alter the ground motion that a building experiences, in addition to reducing the strength and stiffness of the soil supporting the building. To properly assess the implication of liquefaction, the structure should be analyzed first by assuming that liquefaction does not occur. This method provides for the upper-bound structural response and accounts for the fact that liquefaction may not occur during a seismic event, even if the site investigation indicates that the site has the potential for liquefaction.

The second analysis is intended to assess the performance of the structure during the seismic event while foundation soils are liquefied. During that response, the ground shaking, and thus the foundation input motions are different than they would be if liquefaction did not occur. Also, the foundation strength and stiffness are reduced, which could lead to additional deformations in the structure, and should be explicitly modeled and evaluated. However, there are no widely accepted methods to perform effective stress-based site response analysis, although some techniques are available. As a result, such calculations involve considerable uncertainties and should be carried out by a geotechnical specialist.

8.2.2.2.2 Postliquefaction Structural Evaluation The structure shall be evaluated for its integrity to accommodate the deformations of the foundation from potential differential settlements and lateral spreading caused by liquefaction. The estimated differential settlement and lateral spread parameters shall be provided for the Seismic Hazard Level under consideration.

A nonlinear mathematical model in accordance with the provisions in Section 7.4.3.2 is to be used for this analysis. The estimated differential settlement and lateral spread displacement shall be applied to the individual foundation elements or to groups of foundation elements in such a manner as to sufficiently account for the various permutations of ground movement under the building. Structural elements shall be checked for their compliance to the acceptance criteria per Section 7.5 or by other rational criteria based on nonlinear response of the elements under consideration.

C8.2.2.2.2 Postliquefaction Structural Evaluation Differential settlement and lateral spreading caused by liquefaction can have significant effects on a structure. The movement of the foundation elements can pull the structure apart and cause local or global collapse. The structure's ability to accommodate such deformations of the foundation elements must be assessed.

The analysis in this section is similar to those used when assessing a building for progressive collapse caused by the loss of a column. In that type of analysis, a column or multiple columns are removed, then the structure is analyzed to assess how the loads redistribute and whether the deformations induced on the structural elements as the loads redistribute are within acceptable limits. In this analysis, which must explicitly account for the nonlinear behavior of the structure similar to a nonlinear static pushover analysis, settlement and lateral movements are imposed on a foundation element or groups of foundation elements. After that, the superstructure elements are checked to confirm that those elements designated as deformation controlled have deformations within acceptable limits and that those elements designated as force controlled are not stressed beyond their capacity. Additionally, the analysis should confirm that no structural elements unseat as a result of the anticipated deformations.

Because the number of foundation elements affected by the liquefaction-induced differential settlement are different for each building and may even be different depending on the Seismic Hazard Level at which liquefaction is being considered, an explicit number of iterations of this type of analysis cannot be specified. The design professional, subject to the approval of the authority having jurisdiction, must determine how many iterations are required based on the specific site characteristics and the building configuration. The number of iterations must sufficiently demonstrate that the building can perform within the

acceptable bounds of the performance level being targeted in the evaluation or retrofit design.

8.2.2.3 Settlement of Nonliquefiable Soils Soils that do not liquefy during shaking may still generate excess pore-water pressures or experience shaking-induced densification. These settlements occur in addition to settlements associated with liquefaction.

Subsurface soil information shall be obtained to determine if soils susceptible to differential settlement are present under the building foundation.

If a differential settlement hazard is determined to exist at the site, then a more detailed evaluation shall be performed using approved procedures approved by the authority having jurisdiction.

C8.2.2.3 Settlement of Nonliquefiable Soils Settlement of nonliquefiable soils may accompany strong ground shaking and can be damaging to structures. In saturated soils, these settlements occur as a result of generation of some excess pore-water pressure and subsequent reconsolidation after shaking, whereas in dry sands, these settlements occur as a result of vibration. Types of soil susceptible to liquefaction (i.e., relatively loose natural soils, or uncompacted or poorly compacted fill soils) also generally experience differential settlement. Methods proposed by Tokimatsu and Seed (1987), Ishihara and Yoshimine (1992), and Zhang et al. (2002) can be used for nonliquefied saturated coarse-grained soils; methods proposed by Tokimatsu and Seed (1987) and Stewart et al. (2001) can be used for nonliquefied dry coarse-grained soils; and methods proposed by Stewart et al. (2004) can be used for nonliquefied fine-grained soils.

8.2.2.4 Landsliding A landslide shall be defined as the downslope mass movement of earth resulting from any cause. Subsurface soil information shall be obtained to determine if soils susceptible to a landslide that will cause differential movement of the building foundation are present at the site.

Excluding cases of liquefaction flow failures, slope stability shall be evaluated at sites with the following:

1. Existing slopes exceeding 18 degrees (three horizontal to one vertical); or
2. Prior histories of instability (rotational or translational slides, or rock falls).

Use of pseudo static analyses shall be permitted to determine slope stability if the soils are not susceptible to liquefaction based on Section 8.2.2.2 or are otherwise expected to lose shear strength during deformation. If soils are susceptible to liquefaction based on Section 8.2.2.2 or are otherwise expected to lose shear strength during deformation, dynamic analyses shall be performed to determine slope stability.

Pseudo static analyses shall use a seismic coefficient from an approved procedure at sites associated with the selected performance objective or other approved methods. Sites with a static factor of safety equal to or greater than 1.0 shall be judged to have adequate stability and require no further stability analysis.

A sliding-block displacement analysis shall be performed for sites with a static factor of safety of less than 1.0. The displacement analysis shall determine the magnitude of ground movement and its effect upon the performance of the structure.

In addition to the effects of landslides that directly undermine the building foundation, the effects of rock fall or slide debris from adjacent slopes shall be evaluated using approved procedures.

C8.2.2.4 Landsliding If no blocks of rock are present at the site but a cliff or steep slope is located nearby, then the likely performance of the cliff under earthquake loading should be evaluated. The earthquake loading condition for cliff performance must be compatible with the earthquake loading condition selected for the performance objective for the building.

Some sites may be exposed to hazards from major landslides moving onto the site from upslope, or retrogressive removal of support from downslope. Such conditions should be identified during site characterization and may pose special challenges if adequate investigation requires access to adjacent property.

Anderson et al. (2008) provide a method for one to determine a seismic coefficient and factor of safety for such analysis.

8.2.2.5 Flooding or Inundation For seismic evaluation and retrofit of buildings for Performance Levels higher than Life Safety, site information shall be obtained to determine if the following sources of earthquake-induced flooding or inundation are present:

1. Dams located upstream, subject to damage by earthquake shaking or fault rupture;
2. Pipelines, aqueducts, and water storage tanks located upstream, subject to damage by fault rupture, earthquake-induced landslides, or strong shaking;
3. Coastal areas within tsunami zones or areas adjacent to bays or lakes, subject to seiche waves; and/or
4. Low-lying areas with shallow groundwater, subject to regional subsidence and surface ponding of water, resulting in inundation of the site.

Damage to buildings from earthquake-induced flooding or inundation shall be evaluated for its effect upon the performance of the structure.

In addition to the effects of earthquake-induced flooding or inundation, scour of building foundation soils from swiftly flowing water shall be evaluated using procedures approved by the authority having jurisdiction.

8.3 MITIGATION OF SEISMIC–GEOLOGIC SITE HAZARDS

Mitigation of seismic–geologic hazards identified in Section 8.2 shall be accomplished through modification of the structure, foundation, or soil conditions, or by other methods approved by the authority having jurisdiction. The structure, foundation, and soil for the building shall meet the acceptance criteria for the appropriate chapters of this standard for the selected Performance Objective.

C8.3 MITIGATION OF SEISMIC–GEOLOGIC SITE HAZARDS

Opportunities exist to improve seismic performance under the influence of some site hazards at reasonable cost; however, some site hazards may be so severe that they are economically impractical to include in risk-reduction measures. The discussions presented in this section are based on the concept that the extent of site hazards is discovered after the decision for seismic retrofit of a building has been made. However, the decision to retrofit a building and the selection of a Performance Objective may have been made with full knowledge that significant site hazards exist and must be mitigated as part of the retrofit.

Possible mitigation strategies for seismic–geologic site hazards are presented in the following sections.

Fault rupture. If the structural performance of a building evaluated for the calculated ground movement caused by fault rupture during earthquake fails to comply with the requirements for the selected Performance Level, mitigation schemes should be used that include one or more of the following measures to achieve acceptable performance: stiffening of the structure and/or its foundation, strengthening of the structure and/or its foundation, and modifications to the structure and/or its foundation to distribute the effects of differential vertical movement over a greater horizontal distance to reduce angular distortion.

Large movements caused by fault rupture generally cannot be mitigated economically. If the structural consequences of the estimated horizontal and vertical displacements are unacceptable for any performance level, either the structure, its foundation, or both, might be stiffened or strengthened to reach acceptable performance. Measures are highly dependent on specific structural characteristics and inadequacies. Grade beams and reinforced slabs are effective in increasing resistance to horizontal displacement. Horizontal forces are sometimes limited by sliding friction capacity of spread footings or mats. Vertical displacements are similar in nature to those caused by long-term differential settlement.

Liquefaction. If the structural performance of a building evaluated for the calculated ground movement caused by liquefaction during an earthquake fails to comply with the requirements for the selected Performance Level, then one or more of the following mitigation measures should be implemented to achieve acceptable performance.

Modification of the structure. The structure should be strengthened to improve resistance against the predicted liquefaction-induced ground deformation. This solution may be feasible for small ground deformations.

Modification of the foundation. The foundation system should be modified to reduce or eliminate the differential foundation displacements by underpinning existing shallow foundations to achieve bearing on deeper, nonliquefiable strata or by stiffening a shallow foundation system by a system of grade beams between isolated footings, or any other approved method.

Modification of the soil conditions. One or more of the following ground improvement techniques should be implemented to reduce or eliminate the liquefaction under existing buildings: soil grouting (either throughout the entire liquefiable strata beneath a building or locally beneath foundation components), soil mixing, installation of drains, or installation of permanent dewatering systems.

Other types of ground improvement widely used for new construction are less applicable to existing buildings because of the effects of the procedures on the building. Thus, removal and replacement of liquefiable soil or in-place densification of liquefiable soil by various techniques is not applicable beneath an existing building.

Mitigation of the lateral spreading. Large soil volumes should be stabilized, and/or buttressing structures should be constructed.

If the potential for significant liquefaction-induced lateral spreading movements exists at a site, then the mitigation of the liquefaction hazard may be more difficult. This difficulty occurs because the potential for lateral spreading movements beneath a building may depend on the behavior of the soil mass at distances well beyond the building and immediately beneath it.

Differential settlement compaction. If the structural performance of a building evaluated for the calculated differential settlement during earthquake fails to comply with the requirements for the selected Performance Level, then one or more mitigation measures similar to those recommended for liquefaction should be implemented to achieve acceptable performance.

Landslide. If the structural performance of a building evaluated for the calculated ground movement caused by landslide during earthquake fails to comply with the requirements for the selected Performance Level, then one or more of the following mitigation measures should be implemented to achieve acceptable performance:

1. Regrading;
2. Drainage;
3. Buttressing;
4. Structural improvements;
5. Gravity walls;
6. Tieback–soil nail walls;
7. Mechanically stabilized earth walls;
8. Barriers for debris torrents or rock fall;
9. Building strengthening to resist deformation;
10. Grade beams;
11. Shear walls; and
12. Soil modification or replacement: Grouting and densification.

Flooding or inundation. If the structural performance of a building evaluated for the effects of earthquake-induced flooding and inundation fails to comply with the requirements for the selected Performance Level, then one or more of the following mitigating measures should be implemented to achieve acceptable performance:

1. Improvement of nearby dam, pipeline, or aqueduct facilities independent of the building;
2. Diversion of anticipated peak flood flows;
3. Installation of pavement around the building to reduce scour; and
4. Construction of a seawall or breakwater for tsunami or seiche protection.

8.4 FOUNDATION STRENGTH AND STIFFNESS

The strength and stiffness of shallow foundations shall be determined in accordance with Section 8.4.2. The strength and stiffness of deep foundations shall be determined in accordance with Section 8.4.3 or 8.4.4. Regardless of whether the foundations are shallow or deep, they may be modeled as fixed-base foundations (in which case stiffness would not be required), or flexible-base foundations.

C8.4 FOUNDATION STRENGTH AND STIFFNESS

It is assumed that foundation soils are not susceptible to significant strength loss caused by earthquake loading. In general, soils have considerable ductility unless they degrade significantly in stiffness and strength under cyclic loading. With this assumption, the provisions of this section provide an overview of the requirements and procedures for evaluating the ability of foundations to withstand the imposed seismic loads without excessive deformations.

The amount of acceptable deformations for foundations in such soils depends primarily on the effect of the deformation on the structure, which in turn depends on the desired Structural Performance Level. However, foundation yield associated with mobilization at upper-bound expected capacity during earth-

quake loading may be accompanied by progressive permanent foundation settlement during continued cyclic loading, albeit in most cases, where foundation compression loads are low, this settlement probably would be less than a few inches. In general, if the real loads transmitted to the foundation during earthquake loading do not exceed upper-bound expected soil capacities, it can be assumed that foundation deformations are relatively small.

Parametric analyses to cover uncertainties in soil load-deformation characteristics are required. One alternative is to perform the nonlinear static procedure (NSP) or nonlinear dynamic procedure (NDP) because the nonlinear load-deformation characteristics of the foundations can be directly incorporated in these analyses (Section 8.4.2). In nonlinear static procedures, a somewhat conservative interpretation of the results is recommended because cyclic loading effects cannot be incorporated directly.

8.4.1 Expected Foundation Capacities The expected capacity of foundation components shall be determined by prescriptive or site-specific methods as specified in Sections 8.4.1.1 and 8.4.1.2. Capacities shall be at ultimate levels and be based on foundation information obtained as specified in Section 8.2.1.

C8.4.1 Expected Foundation Capacities In the past, geotechnical engineers tended to make conservative assumptions to determine the bearing capacities of soil for foundation design. Traditionally, a factor of 3 was often used as a minimum acceptable factor of safety against bearing failure. In many cases, however, foundation dimensions are controlled by settlement, not capacity, considerations. If allowable pressures were controlled by long-term settlements, then allowable pressures may be much smaller than expected capacities under dynamic loading situations. It is important to obtain information on actual factors of safety in the determination of the expected capacities. This result may be obtained from prescriptive methods (Section 8.4.1.1), past geotechnical reports, or based on new site-specific geotechnical site investigation.

In projecting expected capacities and load-deformation characteristics, it is also important to understand the bearing pressures that the foundations are exhibiting under the building gravity loads or have experienced during past seismic loading conditions and whether the foundations have performed adequately.

8.4.1.1 Prescriptive Expected Capacities Prescriptive expected capacities shall be used where construction documents or previous geotechnical reports for the existing building are available and provide information on foundation soil design parameters. Calculation of prescriptive expected capacities by the following methods shall be permitted:

1. The prescriptive expected bearing capacity, q_c, for a spread footing shall be calculated using Eq. (8-1):

$$q_c = 3q_{\text{allow}} \tag{8-1}$$

where q_{allow} = allowable bearing pressure specified in available documents for the gravity load design of shallow foundations (dead plus live loads);

2. For deep foundations, the prescriptive expected vertical capacity, Q_c, of individual piles or piers shall be calculated using Eq. (8-2):

$$Q_c = 3Q_{\text{allow}} \tag{8-2}$$

where Q_{allow} = allowable vertical capacity specified in available documents for the gravity load design of deep foundations (dead plus live loads); and

3. Alternatively, the prescriptive expected capacity, q_c or Q_c, of any foundation, shallow or deep, shall be calculated using Eq. (8-3):

$$q_c \text{ or } Q_c = 1.5Q_G \tag{8-3}$$

where Q_G = gravity load action as specified in Section 7.2.2, expressed in terms of pressure or load.

C8.4.1.1 Prescriptive Expected Capacities When the allowable bearing pressures for dead load plus live load used to design the foundation are indicated either on the drawings or on previous geotechnical reports, the prescriptive foundation capacities can be estimated assuming that a factor of safety of 3 was used. Typically allowable bearing values for dead load only are based on limiting settlement, and those allowable capacities that include transient loads such as wind or seismic load include a stress increase; therefore, the values for dead plus live should be used with method 1 or method 2 in this section.

Method 3 provides a means by which one can estimate the foundation capacities when there is no information on the original design foundation values or original geotechnical report. Additional information on typical allowable foundation capacities for various subsurface conditions can be found in NAVFAC DM-7.01 (NAVFAC 1986a) and NAVFAC DM-7.02 (NAVFAC 1986b). Those referenced allowable values can be adjusted by method 1 or 2 and compared with what is obtained through the use of method 3 to confirm the reasonableness of method 3.

8.4.1.2 Site-Specific Capacities For buildings where the methods specified in Section 8.4.1.1 do not apply, a subsurface geotechnical investigation shall be conducted to determine expected ultimate foundation capacities based on the specific characteristics of the building site.

C8.4.1.2 Site-Specific Capacities The geotechnical site investigation should focus attention on the regions of soil below and near the foundations at locations where the strength of the soil is expected to be mobilized.

8.4.2 Load-Deformation Characteristics for Shallow Foundations If building foundations are explicitly modeled in the mathematical model of the building, the load-deformation characteristics shall be calculated in accordance with Sections 8.4.2.3 to 8.4.2.5 for shallow bearing foundations.

For the nonlinear dynamic procedure (NDP), nonlinear sliding and overturning behavior of foundations shall be represented by an equivalent elastoplastic load-deformation relationship.

Where foundation components are modeled explicitly, the analysis shall be performed using upper- and lower-bound load-deformation characteristics of foundations as illustrated in Fig. 8-1(a) and defined in this section. Where foundation components are not modeled explicitly, the analysis shall be bounded by the upper- and lower-bound foundation capacity as defined in this section. In lieu of explicit evaluation of uncertainties in foundation characteristics, it shall be permitted to take the upper-bound stiffness and bearing capacity values and shear-sliding and axial load-settlement relationships as two times the expected values and the lower-bound stiffness and capacity values as one-half of the expected values.

C8.4.2 Load-Deformation Characteristics for Shallow Foundations Explicit models of foundations account for the capacity and stiffness of each foundation element.

Load-deformation characteristics are required where the effects of foundations are to be taken into account in linear static procedures (LSPs) or linear dynamic procedures (LDPs), NSPs

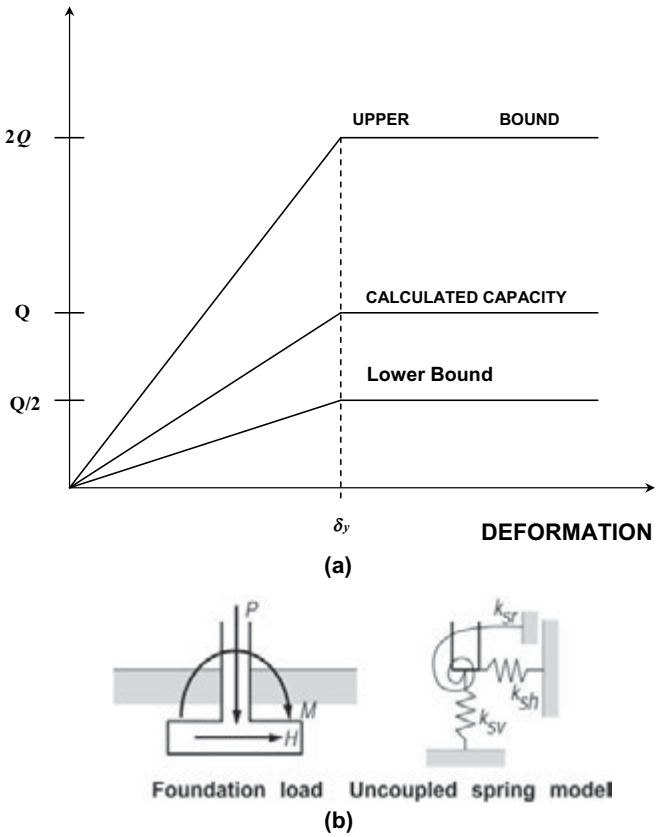

FIG. 8-1. (a) Idealized Elastoplastic Load-Deformation Behavior for Soils; (b) Uncoupled Spring Model for Rigid Footings

(pushover), or NDPs (time history). Foundation load-deformation parameters characterized by both stiffness and capacity can have a significant effect on both structural response and load distribution among structural components.

Although it is recognized that the load-deformation behavior of foundations is nonlinear, an equivalent elastoplastic representation of load-deformation behavior is acceptable. To allow for soil variability or uncertainty, an upper- and lower-bound approach to defining stiffness and capacity is required to evaluate the sensitivity of the structural response to these parameters.

The sources of this uncertainty include the mode of shear, strain rate effects, progressive failure, cyclic loading effects, natural soil variability, and the inability to capture nonlinear soil response using an idealized constitutive model. These sources of variability produce results that are generally within a factor of 2 above or below the expected value for deformation and mobilization of bearing or sliding capacity. It is noteworthy that rocking and overturning behavior of shallow foundations with large moment-to-shear ratio is subject to less uncertainty because their moment capacity is largely determined by geometry and axial load on the footing. It is conceivable that certain conditions fall outside the bounds prescribed in this standard. However, it is not the objective to guarantee that the answer is always within the applied factor. Instead, the intent is that solution sensitivity be identified and that the bounds, considered reasonably, capture the expected behavior. Current practice (both conventional and within the nuclear industry) has suggested that variation by a factor of 2 is generally appropriate for bearing and sliding. Consistent with the approach taken in ASCE 4, if additional testing is performed, the range could be narrowed to that defined by multiplying and dividing by $(1 + C_v)$ where the coefficient of variation, C_v, is defined as the standard deviation divided by the mean. In no case should C_v be taken to be less than 0.5 for foundations controlled by sliding or bearing deformations.

The behavior of a shallow foundation that uplifts and overturns as opposed to slides is not subject to as much uncertainty as the behavior of a shallow foundation that deforms due to bearing capacity mobilization or sliding. The overturning capacity is largely controlled by the vertical load and the dimensions of the footing that are not affected by variability in soil properties. For nonlinear procedures, the modeling parameters and acceptance criteria for footings allowed to uplift and procedures for evaluating uncertainty in rocking capacity are described in Sections 8.4.2.3 to 8.4.2.5.

It is important that geotechnical engineers report the average expected results obtained and the actual factor of safety applied to arrive at design values for soil strength and stiffness. In the past, design values recommended by geotechnical engineers were often consistent with lower-bound strengths. If such reduced values were used by the structural engineer as expected values, the application of the prescribed upper- and lower-bound variations would not achieve the intended aim.

Consideration of foundation rocking. Buildings may rock on their foundations in an acceptable manner, provided that the structural components can accommodate the resulting displacements and deformations. Consideration of rocking can be used to limit the force input to a building.

The design professional is directed to the work of Housner (1963), Priestley et al. (1978), Yim and Chopra (1985), FEMA 274 (1997b), Makris and Roussos (1998), Makris and Konstantinidis (2001), Gajan et al. (2010), and Deng et al. (2012). Significant discrepancies between nonlinear dynamic analysis and response spectrum methods occur for both rocking systems and more conventional hinging systems when large deformations (e.g., P-Δ effects) become significant. Gajan et al. (2010) show that rocking on soil dissipates considerable energy associated with plastic deformations of the soil and that the energy dissipation is not well described using the theory of inelastic collisions.

8.4.2.1 Flexibility of Shallow Bearing Foundations The structural flexibility and strength of the footing shall be consistent with the soil bearing pressure distribution assumed with the foundation assessment. The flexibility assessment shall consider whether soil–footing contact remains or uplift occurs. In addition to the elastic properties assessment, the structural capacity of the footing shall be assessed to determine if the soil bearing pressure distribution can be developed by the footing. Where the structural footing is assessed to be classified as rigid, Method 1 in Section 8.4.2.3 or Method 2 in Section 8.4.2.4 shall be used. If structural yielding occurs in the footing or if the structural footing is elastically flexible relative to the soil, the footing shall be considered flexible and the foundation load-deformation characteristics shall be based on Method 3 in Section 8.4.2.5.

C8.4.2.1 Flexibility of Shallow Bearing Foundations In this section, the term "footing" applies to the structural component of the foundation, whereas the term "foundation" refers to the footing together with the soil supporting the footing. For beams on elastic supports (e.g., strip footings and grade beams) with a point load at midspan, the beam may be considered rigid where

$$\frac{EI}{L^4} > \frac{2}{3} k_{sv} B \qquad \text{(C8-1)}$$

This equation is generally consistent with traditional beam-on-elastic foundation limits (NAVFAC 1986b and Bowles 1988).

For rectangular plates (with plan dimensions L and B, thickness t, and mechanical properties E and ν) on elastic supports (for instance, mat foundations or isolated footings) subjected to a point load in the center, the foundation may be considered rigid where

$$4k_{sv}\sum_{m=1}^{5}\sum_{n=1}^{5}\frac{\sin^2\left(\frac{m\cdot\pi}{2}\right)\sin^2\left(\frac{n\cdot\pi}{2}\right)}{\left[\pi^4 D\left(\frac{m^2}{L^2}+\frac{n^2}{B^2}\right)^2\right]+k_{sv}} < 0.03 \qquad \text{(C8-2)}$$

where

$$D=\frac{Et^3}{12(1-\nu)^2} \qquad \text{(C8-3)}$$

This equation is based on Timoshenko's solutions for plates on elastic foundations (Timoshenko and Woinowsky-Krieger 1959). Equations (C8-2) and (C8-3) are not applicable to cases for which the soil yields, the footing yields, or uplift occurs. To obtain Eq. (C8-2), the general solution has been simplified by restriction to a center load. Only the first five values of m and n (in the infinite series) are required to achieve reasonable accuracy.

Where uplift occurs, the footing generally is governed by rocking about the leading edge of the footing. Existing spread footings may yield before attaining the full rocking capacity, which would result in a soil bearing pressure more closely aligned with a flexible footing condition.

8.4.2.2 Soil Shear Modulus and Poisson's Ratio Parameters The expected elastic soil properties relevant to dynamic stiffness of the footings should be based upon the expected properties in the regions immediately below the soil–footing interface to a depth of about one or two footing widths below the soil–footing interface. If soil properties are not drastically varying over this depth, the average value may be determined by taking the value at a depth of $D_f+\left(\sqrt{B_f L_f}\right)/2$, where D_f is the depth of the soil–footing interface and B_f and L_f are the width and length of the footing, respectively.

For seismic loading, Poisson's ratio for saturated clay may be taken as 0.5, and Poisson's ratio for other soils may be taken as 0.25.

The initial shear modulus, G_0, shall be calculated in accordance with one of Eqs. (8-4) through (8-7) evaluated over the appropriate depth. Equation (8-4) may be used for all soil types but underestimates the shear modulus if the shear wave velocity (v_{s0}) is measured before consolidation under the expected vertical loads on the footings. Equation (8-5) is applicable to clayey soils and Eqs. (8-6) and (8-7) are applicable to sandy soils. Equations (8-6) and (8-7) provide a means to account for the effect that consolidation under the increased load on the footing increases the stiffness of the soil.

$$G_0=\frac{\gamma v_{s0}^2}{g} \qquad \text{(8-4)}$$

$$G_0 \cong 120 p_a (N_{60})^{0.77} \qquad \text{(8-5)}$$

$$G_0 \cong 435 (N_1)_{60}^{1/3}\sqrt{p_a \sigma'_{mp}} \qquad \text{(8-6)}$$

$$G_0 \cong \frac{625\sqrt{p_a \sigma'_{mp}}}{0.3+0.7e_v^2} \qquad \text{(8-7)}$$

σ'_{mp} = mean effective stress ($\sigma'_1+\sigma'_2+\sigma'_3$) averaged over the relevant region below the footing. The σ'_{mp} may be obtained as the larger value from Eqs. (8-8) and (8-9).

$$\sigma'_{mp}=\frac{1}{6}\left(0.52-0.04\frac{L_f}{B_f}\right)\frac{Q_{Gf}}{A_f} \qquad \text{(8-8)}$$

$$\sigma'_{mp} \geq \sigma'_{vo}=(\gamma_t)(D_f+B_f/2)-u \qquad \text{(8-9)}$$

v_{s0} = shear wave velocity at low strains at the appropriate depth;
γ = total unit weight of the soil;
g = acceleration caused by gravity;
N_{60} = standard penetration test blow count corrected to an equivalent hammer energy efficiency of 60%;
p_a = atmospheric pressure;
$(N_1)_{60}$ = standard penetration test blow count normalized for an effective stress of 1.0 ton/ft^2 confining pressure and corrected to an equivalent hammer energy efficiency of 60%;
e_v = void ratio;
Q_{Gf} = expected bearing load on footing due to gravity loads, including load caused by overburden soil above the footing;
A_f = Area of footing;
σ'_{vo} = effective vertical stress at a depth of $D_f + B_f/2$;
γ_t = total unit weight of soil; and
u = pore-water pressure at depth ($D_f + B_f/2$).

The effective shear modulus, G, shall be calculated in accordance with Table 8-2.

C8.4.2.2 Soil Shear Modulus and Poisson's Ratio Parameters Equations (8-4) through (8-7) are obtained by Kramer (1996) and Seed et al. (1986). The numerical values of the coefficients in Eqs. (8-5) through (8-7) are different than the sources because the source equations were restricted to a specific system of units. Atmospheric pressure, p_a, has been included in the equations to make them dimensionally consistent and valid for any system of units.

Equation (8-8) is obtained from Salgado (2008). It was intended to be used to evaluate the effect of mean effective stress on the friction angle of the soil. Here it is adopted to determine a reasonable spatially averaged mean effective stress for use in Eqs. (8-5), (8-6), and (8-7) for estimation of the shear modulus. Mean effective stress refers to the average of the three principal effective stresses. Because Eq. (8-8) may sometimes produce estimates of the spatially averaged mean effective stress smaller than the overburden, and this was not considered reasonable, Eq. (8-9) introduces a lower bound.

The reduction factors for shear modulus in Table 8-2 approximately account for the modulus reduction of the soil caused by nonlinearity associated with ground shaking.

Table 8-2. Effective Shear Modulus Ratio (G/G_0)

	Effective Peak Acceleration, $S_{XS}/2.5$[a]			
Site Class	$S_{XS}/2.5 = 0$	$S_{XS}/2.5 = 0.1$	$S_{XS}/2.5 = 0.4$	$S_{XS}/2.5 = 0.8$
A	1.00	1.00	1.00	1.00
B	1.00	1.00	0.95	0.90
C	1.00	0.95	0.75	0.60
D	1.00	0.90	0.50	0.10
E	1.00	0.60	0.05	[b]
F	[b]	[b]	[b]	[b]

[a]Use straight-line interpolation for intermediate values of $S_{XS}/2.5$.
[b]Site-specific geotechnical investigation and dynamic site response analyses shall be performed.

8.4.2.3 Shallow Footings Considered Rigid (Method 1)

8.4.2.3.1 Expected Strength and Stiffness Expected nonlinear sliding and bearing behavior of foundations shall be represented by a bilinear elastic, perfectly plastic load-deformation relationship unless another approved relationship is available. The initial elastic stiffness may be calculated using elastic solutions in Fig. 8-2 with expected shear modulus and Poisson's ratio determined according to Section 8.4.2.2.

Where foundation components are modeled explicitly, the analysis shall be performed using the expected load-deformation characteristics and also using the upper- and lower-bound load-deformation characteristics as illustrated in Fig. 8-1(a). The expected moment capacity, M_c, shall be calculated using Eq. (8-10) with expected values of L_f, P, q, and q_c. The upper- and lower-bound values for bearing, sliding, and rocking stiffness and for bearing and sliding capacity shall be obtained by multiplying and dividing by $(1 + C_v)$ where the coefficient of variation, C_v, is defined as the standard deviation divided by the mean. C_v shall be taken as 1 unless specific data are available to show otherwise. In no case shall the value of C_v be taken as less than 0.5.

In cases for which the moment-to-shear ratio, M/H, on the soil–foundation interface is greater than the footing length ($M/H > L$), rocking behavior controls (M and H are defined in Fig. 8-1). For rectangular footings, the upper-bound moment capacity shall be determined using Eq. (8-10) with the expected values of P and q, the upper-bound value of L, and using q_c multiplied by $(1 + C_v)$. The lower-bound moment capacity shall be determined with the expected values of P and q, the lower-bound values of L, and using q_c divided by $(1 + C_v)$.

$$M_c = \frac{LP}{2}\left(1 - \frac{q}{q_c}\right) \tag{8-10}$$

where P = expected vertical load on soil at the footing interface due to gravity and seismic loads;

Degree of Freedom	Stiffness of Foundation at Surface	Note
Translation along x-axis	$K_{x,sur} = \frac{GB}{2-\nu}\left[3.4\left(\frac{L}{B}\right)^{0.65} + 1.2\right]$	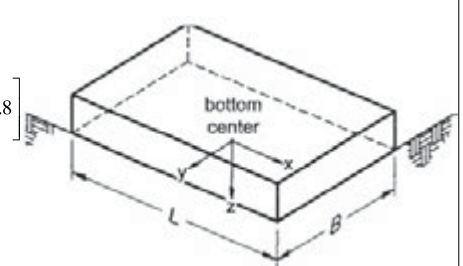
Translation along y-axis	$K_{y,sur} = \frac{GB}{2-\nu}\left[3.4\left(\frac{L}{B}\right)^{0.65} + 0.4\frac{L}{B} + 0.8\right]$	
Translation along z-axis	$K_{z,sur} = \frac{GB}{1-\nu}\left[1.55\left(\frac{L}{B}\right)^{0.75} + 0.8\right]$	
Rocking about x-axis	$K_{xx,sur} = \frac{GB^3}{1-\nu}\left[0.4\left(\frac{L}{B}\right) + 0.1\right]$	
Rocking about y-axis	$K_{yy,sur} = \frac{GB^3}{1-\nu}\left[0.47\left(\frac{L}{B}\right)^{2.4} + 0.034\right]$	Orient axes such that $L > B$. If $L = B$, use x-axis equations for both x-axis and y-axis.
Torsion about z-axis	$K_{zz,sur} = GB^3\left[0.53\left(\frac{L}{B}\right)^{2.45} + 0.51\right]$	

Degree of Freedom	Correction Factor for Embedment
Translation along x-axis	$\beta_x = \left(1 + 0.21\sqrt{\frac{D}{B}}\right)\cdot\left[1 + 1.6\left(\frac{hd(B+L)}{BL^2}\right)^{0.4}\right]$
Translation along y-axis	$\beta_y = \left(1 + 0.21\sqrt{\frac{D}{L}}\right)\cdot\left[1 + 1.6\left(\frac{hd(B+L)}{LB^2}\right)^{0.4}\right]$
Translation along z-axis	$\beta_z = \left[1 + \frac{1}{21}\frac{D}{B}\left(2 + 2.6\frac{B}{L}\right)\right]\cdot\left[1 + 0.32\left(\frac{d(B+L)}{BL}\right)^{2/3}\right]$
Rocking about x-axis	$\beta_{xx} = 1 + 2.5\frac{d}{B}\left[1 + \frac{2d}{B}\left(\frac{d}{D}\right)^{-0.2}\sqrt{\frac{B}{L}}\right]$
Rocking about y-axis	$\beta_{yy} = 1 + 1.4\left(\frac{d}{L}\right)^{0.6}\left[1.5 + 3.7\left(\frac{d}{L}\right)^{1.9}\left(\frac{d}{D}\right)^{-0.6}\right]$
Torsion about z-axis	$\beta_{zz} = 1 + 2.6\left(1 + \frac{B}{L}\right)\left(\frac{d}{B}\right)^{0.9}$

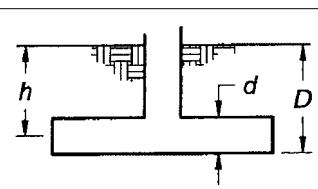

d = height of effective sidewall contact (may be less than total foundation height)

FIG. 8-2. Elastic Solutions for Rigid Footing Spring Constraints

$$q = \frac{P}{B_f L_f} = \text{vertical bearing pressure;}$$

B_f = width of footing (parallel to the axis of bending);
L_f = length of footing in the direction of bending; and
q_c = expected bearing capacity determined in Section 8.4.1.

The critical contact area, A_c, defined as the footing area required to support the vertical load shall be calculated as $A_c = P/q_c$.

For nonrectangular footings, the moment capacity shall be obtained by determining the critical contact area, A_c, and integrating the product of the bearing capacity times the distance from the neutral axis of the footing over the critical contact area.

For cases where the moment-to-shear ratio $(M/V) < L$, the potential for sliding at the interface shall be included in the assessment.

C8.4.2.3.1 Expected Strength and Stiffness **Sliding and sliding-overturning interaction.** The presence of shear forces has a significant effect on the bearing capacity and moment capacity of the footing. Shear forces on the footing–soil interface may be mitigated by relying on lateral support from restraints such as floor slabs or grade beams. Interaction factors in foundation design textbooks, such as Salgado (2008) and Bowles (1988), may be used to evaluate interaction factors that account for the effect of shear forces on bearing capacity.

8.4.2.3.2 Acceptance Criteria for Linear Procedures

8.4.2.3.2.1 Foundation Modeled as a Fixed Base If the base of the structure is assumed to be completely rigid, the foundation soil shall be classified as deformation controlled. Component actions shall be determined by Eq. (7-34). Acceptance criteria shall be based on Eq. (7-36), *m*-factors for foundation soil shall be 1.5 for Immediate Occupancy, 3.0 for Life Safety, and 4.0 for Collapse Prevention, and the use of upper-bound component capacities shall be permitted. Where overturning results in an axial uplift force demand from linear analysis, this uplift shall be considered deformation controlled, and an *m*-factor of 1.5 for Immediate Occupancy, 3.0 for Life Safety, and 4.0 for Collapse Prevention applied to the expected restoring dead load shall be used.

A fixed-base assumption shall not be used for buildings being evaluated or retrofitted to the Immediate Occupancy Performance Level that are sensitive to base rotations or other types of foundation movement that would cause the structural components to exceed their acceptance criteria.

C8.4.2.3.2.1 Foundation Modeled as a Fixed Base In many cases, the foundation flexibility is not modeled explicitly. For these cases, two things must be considered: global overturning stability and yielding at the soil–foundation interface. The provisions in this section are intended to be complementary to the global overturning stability check in Section 7.2.8. The overall stability of the gravity load and seismic-force-resisting system should be evaluated in Section 7.2.8. Additionally, an evaluation at the soil–foundation interface should be performed. In reality, global rocking of the vertical element as it is assumed in Section 7.2.8 does not occur without some localized yielding at the soil–foundation interface. Provisions in subsequent sections of this chapter address that coupled behavior in more detail.

When a fixed-base model is used, the demands on the soil and forced counteracting potential uplift of the foundation must be checked per this section, in addition to global overturning stability, to determine if there is excessive deformation occurring caused by yielding of the soil or uplift of the foundation. This check is done with the *m*-factors provided. If the demand on the soil does not exceed the *m*-factor augmented capacity and the earthquake uplift load does not exceed the *m*-factor augmented dead load, then no further analysis is required. If, however, the *m*-factor is exceeded, then there is potential for increased deformation at the soil–foundation interface that could affect the behavior of the building through additional imposed drifts on the gravity framing system or through transfer of load to other seismic-force-resisting elements. For those instances, either the flexibility of the foundation should be modeled using a flexible-base and Table 8-3 *m*-factors or the foundation should be proportioned to be large enough that the *m*-factor checks in this section are satisfied. The deformation compatibility checks that one gets with a flexible-base foundation are more important for existing buildings because there are not the explicit deformation compatibility mitigation measures that the current code provisions prescriptive detailing requirements provide.

8.4.2.3.2.2 Foundation Interface Modeled as a Flexible Base Where the foundation flexibility is included in the mathematical model and is modeled using linear elastic foundation

Table 8-3. Modeling Parameters and Numerical Acceptance Criteria for Linear Procedures

Footing Shape			*m*-Factors[a] Performance Level IO	LS	CP
i. Rectangle[b]					
$\frac{b}{L_c}$	$\frac{A_{rect} - A_f}{A_{rect}}$	$\frac{A_c}{A_f}$			
≥ 10	0	0.02	3	7	10
		0.13	2	6	9
		0.5	1	1	1
		1	1	1	1
3	0	0.02	3	7	10
		0.13	2	5	8
		0.5	1	1	1
		1	1	1	1
1	0	0.02	3	6	9
		0.13	1.5	3	6
		0.5	1	1	1
		1	1	1	1
0.3	0	0.02	2.5	5	8
		0.13	1.5	3	5
		0.5	1	1	1
		1	1	1	1
ii. I-Shape[b]					
$\frac{b}{L_c}$	$\frac{A_{rect} - A_f}{A_{rect}}$	$\frac{A_c}{A_f}$			
$1 \le \frac{b}{L_c} \le 10$	0.3	0.02	3	7	10
		0.13	1	3	5
		0.5	1	1	1
		1	—	—	—
$1 \le \frac{b}{L_c} \le 10$	0.6	0.02	3	7	10
		0.13	1.5	3	5
		0.5	1	1	1
		1	—	—	—
$1 \le \frac{b}{L_c} \le 10$	1	0.02	4.5	7	10
		0.13	2	4	7
		0.5	1	1	1
		1	—	—	—

[a]Linear interpolation between values listed in the table shall be permitted.
[b]Where a foundation is subject to uplift, the *m*-factor shall be applied to the restoring dead load.

soil representation, the foundation soil shall be classified as deformation-controlled. Component actions shall be determined by Eq. (7-34). For rectangular or I-shaped footings, acceptability of foundation overturning shall be based on the *m*-factors in Table 8-3. Where global overturning results in an uplift force on the foundation, the expected dead load action on that portion of the foundation being uplifted shall be multiplied by the appropriate *m*-factor from Table 8-3 and shall be greater than the absolute axial tension demand on the foundation.

The *m*-factors in Table 8-3 depend on A_c/A_f, b/L_c, and the missing area ratio $(A_{rect} - A_f)/A_{rect}$, where A_c is defined in Section 8.4.2.3.1. The idealized footing configurations and corresponding parameters are defined in Fig. 8-3. The parameter *b* is defined as the width of rectangular footings and the flange width of I-shaped footings. The parameter L_c is defined as the length of the contact area and equal to A_c/b. The extent of the I-shape shall be quantified by the missing area ratio. For I-shaped footings, the parameter A_{rect} is equal to the area of the smallest rectangle that covers the footing footprint, and A_f is the actual footing area.

C8.4.2.3.2.2 Modeled as a Flexible-Base Foundation The *m*-factors in Table 8-3 were derived to limit foundation settlements to acceptable values. The *m*-factors in Table 8-3 for LS and CP were based on the experimental observation by Deng et al. (2012) that earthquake-induced foundation settlements for rectangular rocking footings ($M/V > L$) were invariably less than 1% of the footing length, *L*, if the value of A_c/A_f is less than 1/8. Thus large *m*-factors are allowed if $A_c/A_f < 0.13$. It was also observed by Deng et al. (2012) that settlements rapidly accumulate because of cyclic loading if the value of $A_c/A_f > 0.5$ (footings with a static factor of safety with respect to bearing capacity less than 2). Therefore, *m*-factors are set to 1.0 for $A_c/A = 0.5$; there is no *m*-factor on the axial compression for $A_c/A = 1$ because the footing is loaded to capacity by axial loads alone.

The experimental data presented by Deng et al. (2012) was limited to rectangular footings with aspect ratios near 2. For larger aspect ratios, with rocking loading the small edges of the footing, settlements are expected to be greater; the parameter b/L_c was introduced to account for this effect. The parameter *b* represents the minimum width of the ends of the footing, $b = B$ for rectangular footings, and $b = t_f$ for I-shaped footings. *B*, *L*, and t_f are defined in Fig. 8-3.

Because few experimental data are available for rocking or overturning on footings with I-shape, the *m*-factors were reduced for I-shaped footings. The missing area ratio, $(A_{rect} - A_f)/A_{rect}$ is defined to quantify the extent of the effect of the I-shape.

Case d in Fig. 8-3 applies to I-shaped footings with a very thin "web" (perhaps a thin shear wall that connects two rectangular footings). Case d may also represent a composite footing consisting of two separate rectangular footings connected by a coupling beam or a shear wall in the aboveground structure or of a frame. The "web" of the "I" should be sufficiently stiff to ensure that the rectangular footings would rotate about the same point. Where the foundation supporting a frame or wall is composed of isolated footings, case d shall be used and the A_f used to calculate A_c shall be the summation of all the frame footings and *P* shall be the cumulative sum of all the forces acting on all the footings.

In cases where isolated footings are coupled from the structure above and the foundation action results in uplift forces, the overturning capacity is taken as the expected dead load multiplied by the corresponding *m*-factor for that footing. This local foundation assessment ensures that the global overturning behavior is limited to stable lateral deformation.

8.4.2.3.3 Modeling Parameters for Nonlinear Static Procedure The load-deformation characteristics for foundation springs shall be modeled using the trilinear model shown below Table 8-4.

For axial bearing over the entire footing area, $f = 1.0$ (points F and B are coincident); the slope along FA shall be calculated from Fig. 8-4. The limit displacement *d* shall be taken as $L_f/10$ unless analysis shows that larger displacements do not result in loss in soil capacity.

Values for *f*, *g*, and *d* for rocking or overturning of rectangular footings and I-shaped footings are summarized in Table 8-4.

C8.4.2.3.3 Modeling Parameters for Nonlinear Static Procedure The acceptance criteria (total footing rotation angle) in Table 8-4 were derived to limit foundation settlements to acceptable values. The values are only applicable if the acceptable story drifts are ≥ 1%. The allowable rotations in Table 8-4 for LS and

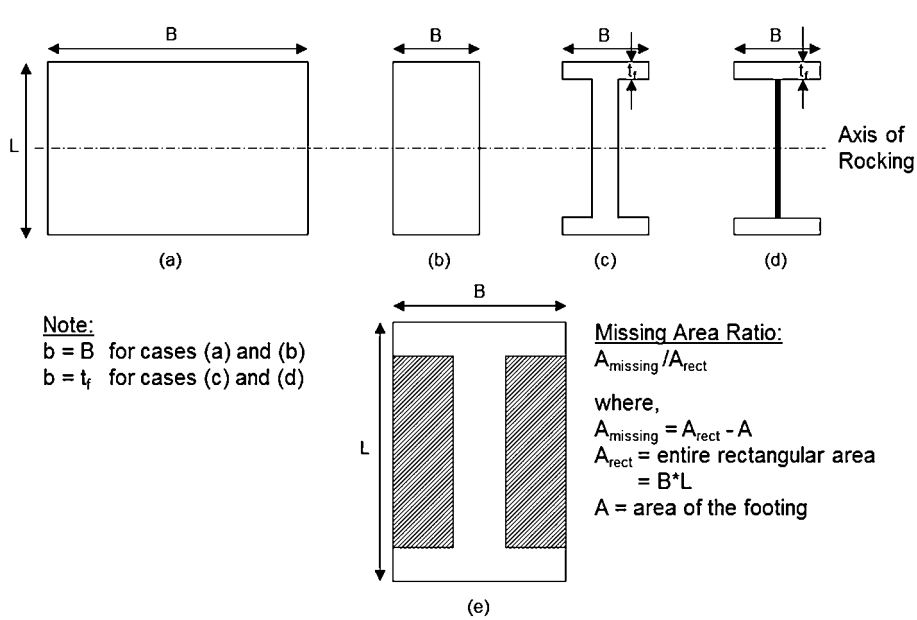

FIG. 8-3. Idealized Footing Configurations and Parameter Definition

Table 8-4. Modeling Parameters and Numerical Acceptance Criteria for Nonlinear Procedures

Footing Shape			Modeling Parameters[a]: Footing Rotation Angle, radians		Modeling Parameters[a]: Elastic Strength Ratio	Acceptance Criteria[a]: Total Footing Rotation Angle, radians[b]: Performance Level		
			g	*d*	*f*	IO	LS	CP
i. Rectangle[c,d]								
$\frac{b}{L_c}$	$\frac{A_{rect} - A_f}{A_{rect}}$	$\frac{A_c}{A_f}$						
≥ 10	0	0.02	0.009	0.1	0.5	0.02	0.08	0.1
		0.13	0.013	0.1	0.5	0.015	0.08	0.1
		0.5	0.015	0.1	0.5	0.002	0.003	0.004
		1	0.015	0.1	0.5	0.0	0.0	0.0
3	0	0.02	0.009	0.1	0.5	0.02	0.068	0.085
		0.13	0.013	0.1	0.5	0.011	0.06	0.075
		0.5	0.015	0.1	0.5	0.002	0.003	0.004
		1	0.015	0.1	0.5	0.0	0.0	0.0
1	0	0.02	0.009	0.1	0.5	0.02	0.056	0.07
		0.13	0.013	0.1	0.5	0.007	0.04	0.05
		0.5	0.015	0.1	0.5	0.002	0.003	0.004
		1	0.015	0.1	0.5	0.0	0.0	0.0
0.3	0	0.02	0.009	0.1	0.5	0.01	0.04	0.05
		0.13	0.013	0.1	0.5	0.007	0.024	0.03
		0.5	0.015	0.1	0.5	0.001	0.003	0.004
		1	0.015	0.1	0.5	0.0	0.0	0.0
ii. I-Shape[c,d]								
$\frac{b}{L_c}$	$\frac{A_{rect} - A_f}{A_{rect}}$	$\frac{A_c}{A_f}$						
$1 \le \frac{b}{L_c} \le 10$	0.3	0.02	0.009	0.1	0.5	0.02	0.056	0.07
		0.13	0.013	0.1	0.5	0.007	0.04	0.05
		0.5	0.015	0.1	0.5	0.002	0.003	0.004
		1	0.015	0.1	0.5	0.0	0.0	0.0
$1 \le \frac{b}{L_c} \le 10$	0.6	0.02	0.007	0.1	0.5	0.015	0.048	0.06
		0.13	0.010	0.1	0.5	0.007	0.032	0.04
		0.5	0.011	0.1	0.5	0.0015	0.0023	0.003
		1	0.011	0.1	0.5	0.0	0.0	0.0
$1 \le \frac{b}{L_c} \le 10$	1	0.02	0.005	0.1	0.5	0.01	0.04	0.05
		0.13	0.007	0.1	0.5	0.007	0.024	0.03
		0.5	0.008	0.1	0.5	0.001	0.0015	0.002
		1	0.008	0.1	0.5	0.0	0.0	0.0

[a]Linear interpolation between values listed in the table shall be permitted.
[b]Allowable story drift > 1%.
[c]Assumed rigid foundations modeled using uncoupled springs.
[d]Assumed rocking dominates over sliding: $(M/V)/L_f > 1$.

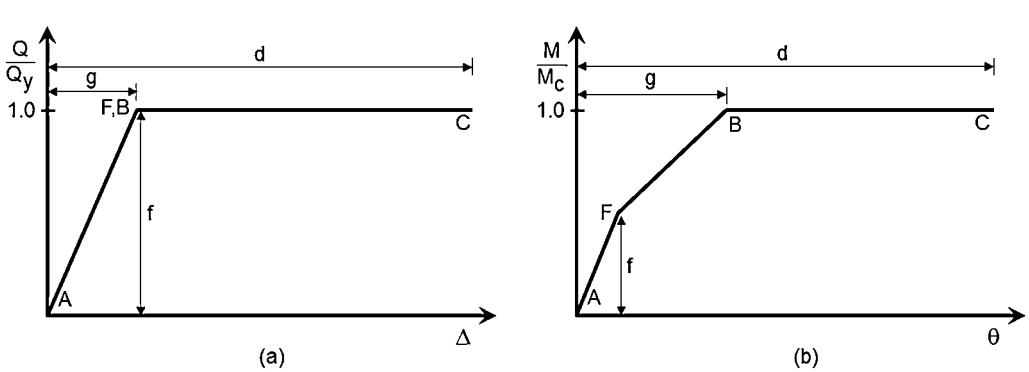

FIG. 8-4. Generalized Nonlinear Force-Deformation Relations for Shallow Foundation Overturning

CP were based on the experimental observation by Deng et al. (2012) that earthquake-induced foundation settlements for rectangular rocking footings ($M/V > L$) were invariably less than 1% of the footing length, L, if the value of A_c/A_f is less than 1/8. Thus, large rotations are allowed if $A_c/A < 0.13$. It was also observed by Deng et al. (2012) that settlements rapidly accumulate because of cyclic loading if the value of $A_c/A_f > 0.5$ (footings with a static factor of safety with respect to bearing capacity less than 2); therefore, allowable rotations are set to be less than 0.004% for $A_c/A_f = 0.5$ and the LS performance level. Zero

footing rotation is acceptable if $A_c/A_f = 1$ because the footing is loaded to capacity by axial loads alone.

The experimental data presented by Deng et al. (2012) was limited to rectangular footings with aspect ratios L/B between ½ and 2. For larger aspect ratios, with rocking loading the small edges of the footing, settlements are expected to be greater; the parameter b/L_c was introduced to account for this effect. The parameter b represents the minimum width of the ends of the footing, $b = B$ for rectangular footings, and $b = t_f$ for I-shaped footings. B, L, and t_f are defined in Fig. 8-3.

Because few experimental data are available for rocking foundations on footings with I-shape, the allowable rotations were reduced for I-shaped footings. The missing area ratio, $(A_{rect} - A_f)/A_{rect}$, is defined to quantify the extent of the effect of the I-shape.

Case d in Fig. 8-3 applies to I-shaped footings with a very thin "web" (perhaps a thin shear wall that connects the two rectangular footings. Case d may also represent one composite footing consisting of two separate rectangular footings connected by a coupling beam or a shear wall in the aboveground structure. The "web" of the "I" should be sufficiently stiff to ensure that the rectangular footings would rotate about the same point.

8.4.2.3.4 Modeling Parameters for Nonlinear Dynamic Procedure For nonlinear dynamic analysis, the shape of the hysteresis curve shall include self-centering and decentering (gap) effects, pinching of the hysteresis curve, and hysteretic damping, if not included in the ground motion or modeled as part of the system damping. Where explicit modeling for radiation damping effects and hysteretic damping is performed, these effects shall not be included in the determination of ground motions or in the mathematical system (inherent) model damping.

C8.4.2.3.4 Modeling Parameters for Nonlinear Dynamic Procedure Table 8-4 does not provide a means to explicitly account for self-centering associated with rocking; nor does it account for magnitude of hysteretic damping. If nonlinear dynamic analysis is to be conducted, there are some advantages to the use of Method 2 using nonlinear Winkler-style foundation springs, which can account for hysteretic damping and self-centering effects (NIST GCR 12-917-21 [ATC, 2012] and Gajan et al. 2010). Using Method 1, it is difficult to account for the effect of the variation over time of axial load on the moment capacity. If axial load variations are important, Method 2 may be preferred.

Modification of the response spectrum because of kinematic interaction effects may be considered, but damping associated with soil–structure interaction should not be included in the selection of the input motion. Damping elements with constant radiation damping coefficients shall not be placed in parallel with nonlinear yielding elements. It is often acceptable to use Rayleigh damping in parallel with the springs with $[C] = \alpha_M \cdot [M] + \beta_k \cdot [K_T]$, where $[M]$ is the mass matrix and $[K_T]$ is the tangent stiffness matrix, with α_M and β_k determined to provide the appropriate damping ratio over the desired frequency range (PEER/ATC 72-1 2010).

8.4.2.3.5 Acceptance Criteria for Nonlinear Procedures Where the foundation flexibility and strength are included in the mathematical model and are modeled using nonlinear foundation characteristics, the foundation soil shall be classified as deformation controlled. Acceptability of soil displacements shall be based on the foundation rotation limits in Table 8-4.

8.4.2.4 Shallow Footings Considered Rigid (Method 2) Where explicit coupling of axial and overturning is included in the mathematical model, Method 2 defined herein may be used. This method may also be used to account for settlement and permanent deformations.

C8.4.2.4 Shallow Footings Considered Rigid (Method 2) This method is recommended for nonlinear procedures and is anticipated as too involved for linear procedures. Hence the provisions herein target nonlinear procedures only. This method is more detailed than Method 1 and, provided that gap elements prevent tensile forces connecting the footing and the soil in the analysis, the method captures the coupling between axial and overturning at the footing–soil interface and captures self-centering and settlement effects.

8.4.2.4.1 Stiffness A finite element representation of nonlinear foundation behavior using Winkler models shall be used to represent the vertical and rotational stiffness provided by the soil reaction. To tune the Winkler model to approximately match both the vertical and rotational stiffnesses from elastic solutions in Fig 8-2, stiffer vertical springs are placed in the end regions of the footing (a region $L_{end} = B_f/6$), as illustrated in Fig. 8-5.

C8.4.2.4.1 Stiffness The stiffness per unit length in these end zones is based on the vertical stiffness of a $B \times B/6$ isolated footing. The stiffness per unit length in the middle zone is equivalent to that of an infinitely long strip footing. A check should be made to ensure that the vertical and rotational stiffnesses of the Winkler representation of the footing satisfactorily match the stiffnesses computed using Method 1. For more guidance, refer to Gajan et al. (2010).

8.4.2.4.2 Expected Strength of Soil Bearing Springs The vertical bearing capacity of the soil springs per unit area of the footing may be obtained by $q_{sp,max} = q_c$. The tension capacity of the soil springs shall be set at zero, and a no-tension gap shall be modeled. The spacing of the springs shall be sufficient to capture the yielding of the soil under bearing loads at the loaded edge of the footing and the moment capacity calculated per Eq. (8-10).

C8.4.2.4.2 Expected Strength of Soil Bearing Springs To capture the progressive settlement associated with rocking in an NDP, the critical contact area should be emulated by the yielding springs. This emulation may be accomplished by limiting the spacing of the springs along the length of the footing to be less than $L_c/2$, where $L_c = P/(B_f q_c)$ for a rectangular footing. The intent is to ensure that at least two of the yielding springs would be required to support the axial load P.

8.4.2.4.3 Modeling Parameters and Acceptance Criteria for Nonlinear Static Procedures Damping caused by energy dissipation from yielding at the soil–footing interface and radiation damping shall only be included in the model where soil–structure interaction (SSI) modifications are not used.

Where the foundation flexibility and strength are included in the mathematical model and are modeled using nonlinear foundation characteristics, the foundation soil shall be classified as deformation-controlled. Acceptability of soil displacements shall be based on the foundation rotation limits in Table 8-4.

8.4.2.4.4 Modeling Parameters and Acceptance Criteria for Nonlinear Dynamic Procedures In selecting the ground motions for nonlinear dynamic analysis, modification of the acceleration response spectrum caused by kinematic interaction SSI effects may be considered, but damping associated with the localized soil yielding shall be included with hysteretic soil springs, not by reducing the input motion. The characteristics of the soil springs shall be selected to account for hysteretic behavior (including settlement and self-centering). The expected ground

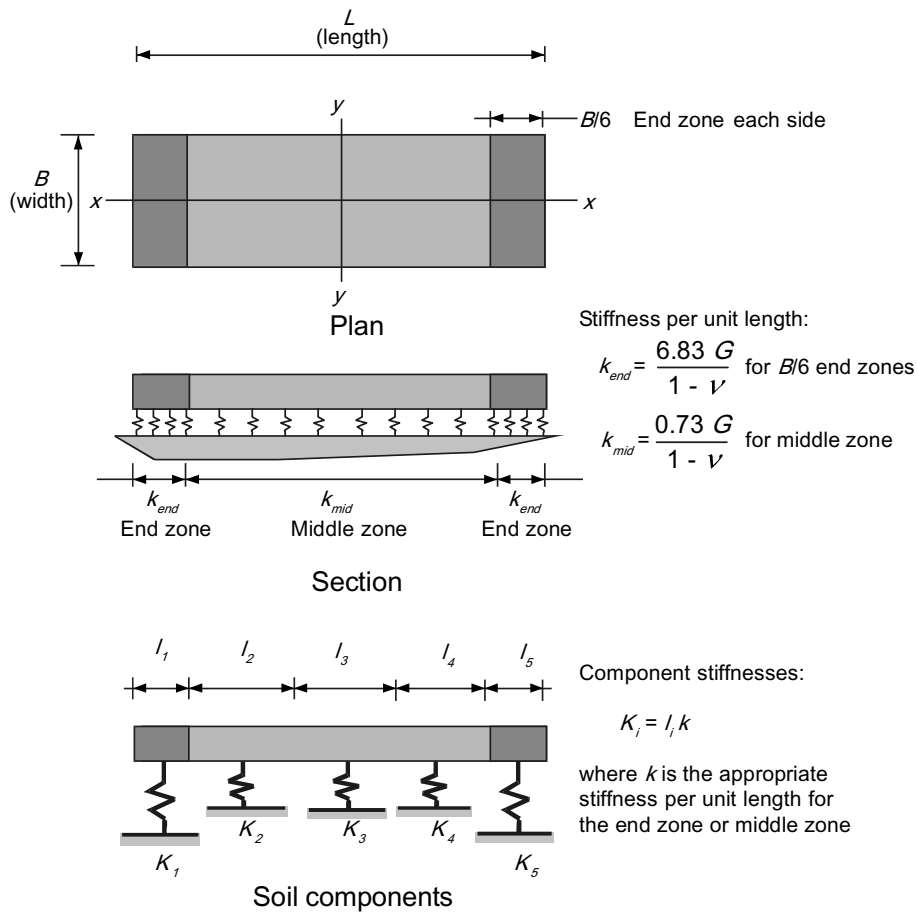

FIG. 8-5. Vertical Stiffness Modeling for Shallow Bearing Footings

motions, with kinematic effects accounted for, shall be applied to the ends of the hysteretic soil springs. Damping elements with constant radiation damping coefficients calculated based on $c = \beta\left(2\sqrt{k_{ie}m}\right)$, where k_{ie} is the initial elastic stiffness of the foundation spring, may be placed in parallel with the linear component of the foundation spring but shall not be in parallel with the nonlinear components of the foundation springs. It may be permitted to use damping coefficients or Rayleigh damping based upon the tangent stiffness in the numerical analysis, but it is preferable to explicitly match hysteretic damping through hysteresis of the soil springs.

Where the explicit NDP modeling of the foundation occurs and the modeling accurately captures characteristics of settling, soil plasticity, and gapping, the acceptability of soil displacements shall be based on the ability of the structure to accommodate the displacements calculated by the NDP within the acceptance criteria for the selected performance objective. If these characteristics are adequately captured by the NDP, the acceptability of soil displacements shall be based on the foundation rotation limits in Table 8-4.

C8.4.2.4.4 Modeling Parameters and Acceptance Criteria for Nonlinear Dynamic Procedures The nonlinear spring model should be checked to ensure that the moment capacity of the footing matches Eq. (8-10), that the initial stiffness of the system reasonably matches the stiffness expected from Fig. 8-2, and that settlements associated with rocking are adequately represented.

Damping elements placed in parallel with yielding elements can unrealistically restrain yielding of the yielding elements and should be avoided. Care must be taken not to double count the damping caused by radiation damping. Damping issues are discussed in PEER/ATC 72-1 (2010).

8.4.2.5 Shallow Foundations Not Rigid Relative to the Soil (Method 3)

8.4.2.5.1 Stiffness For shallow bearing foundations with structural footings that are flexible relative to the supporting soil, the relative stiffness and strength of foundations and supporting soil shall be evaluated using theoretical solutions for beams and plates on elastic supports, approved by the authority having jurisdiction. The foundation stiffness shall be calculated by a decoupled Winkler model using a unit subgrade spring coefficient. For flexible footing conditions, the unit subgrade spring coefficient, k_{sv}, shall be calculated by Eq. (8-11).

$$k_{sv} = \frac{1.3G}{B_f(1-\nu)} \tag{8-11}$$

where G = shear modulus;
B_f = width of footing; and
ν = Poisson's ratio.

8.4.2.5.2 Expected Strength of Soil Bearing and Overturning Capacity The vertical expected capacity of shallow bearing foundations shall be determined using the procedures of Section 8.4.1.

In the absence of moment loading, the expected vertical load capacity, Q_c, of a rectangular footing shall be calculated by Eq. (8-12).

$$Q_c = q_c B_f L_f \quad (8\text{-}12)$$

where q_c = expected bearing capacity determined in Section 8.4.1;
B_f = width of footing; and
L_f = length of footing.

The moment capacity of a rectangular footing shall be calculated by Eq. (8-10).

8.4.2.5.3 Modeling Parameters and Acceptance Criteria The application of Winkler springs beneath the footing shall be similar to Method 2, except that a uniform distribution of soil stiffness and strength shall be applied based on those calculated in this section.

Where the foundation flexibility and strength are included in the mathematical model and are modeled using nonlinear foundation characteristics, the foundation soil shall be classified as deformation controlled. Acceptability of soil displacements shall be based on the foundation rotation limits in Table 8-4 and the structural footing acceptance criteria.

8.4.2.6 Shallow Foundation Lateral Load The lateral capacity of shallow foundations shall be calculated using established principles of soil mechanics and shall include the contributions of traction at the bottom and passive pressure resistance on the leading face. Mobilization of passive pressure shall be calculated using Fig. 8-6. Acceptability of soil displacements shall be based on the ability of the structure to accommodate these displacements within the acceptance criteria for the selected performance objective.

Alternatively, it shall be acceptable to analyze the response of shallow foundations based on methods that are based on or have been calibrated to test data.

C8.4.2.6 Shallow Foundation Lateral Load For footings subjected to lateral loads, the base traction strength is given by $V = C + N\mu$, where C is the effective cohesion force (effective cohesion stress, c, times footing base area), N is the normal (compressive) force, and μ is the coefficient of friction. If included, side traction is calculated in a similar manner, but it is considered on one side of the footing only. The coefficient of friction is often specified by the geotechnical consultant. In the absence of such a recommendation, μ may be based on the minimum of the effective internal friction angle of the soil and the friction coefficient between soil and foundation from published foundation references. The ultimate passive pressure strength is often specified by the geotechnical consultant in the form of passive pressure coefficients or equivalent fluid pressures. The passive pressure problem has been extensively investigated for more than 200 years. As a result, countless solutions and recommendations exist. The method used should, at a minimum, include the contributions of internal friction and cohesion, as appropriate.

As shown in Fig. 8-6, the force–displacement response associated with passive pressure resistance is highly nonlinear. However, for shallow foundations, passive pressure resistance generally accounts for much less than half of the total capacity. Therefore, it is adequate to characterize the nonlinear response of shallow foundations as elastic–perfectly plastic using the initial, effective stiffness and the total expected capacity. The actual behavior is expected to fall within the upper and lower bounds prescribed in this standard.

The model represented in Fig. 8-6 does not include parameters for the planar dimensions of the foundation element (width and length), or dependence on soil type. As a result, this simplified model can considerably underestimate strength and stiffness. In lieu of using the default properties of Fig. 8-6, it is acceptable to use more advanced methods, such as the one presented in *Investigation of the Resistance of Pile Caps and Integral Abutments to Lateral Loading* (Mokwa and Duncan 2000).

8.4.3 Pile Foundations A pile foundation shall be defined as a deep foundation system composed of one or more driven or cast-in-place piles and a pile cap cast-in-place over the piles, which together form a pile group supporting one or more load-bearing columns, or a linear sequence of pile groups supporting a shear wall.

Analysis of pile foundations shall be performed using the upper- and lower-bound load-deformation characteristics, as illustrated in Fig. 8-1(a). Where additional testing is performed, this range shall be narrowed to that defined by multiplying and dividing by $(1 + C_v)$, where the coefficient of variation, C_v, is defined as the standard deviation divided by the mean. In no case shall the value of C_v be taken as less than 0.5.

The requirements of this section shall apply to piles less than or equal to 24 in. in diameter. The stiffness characteristics of

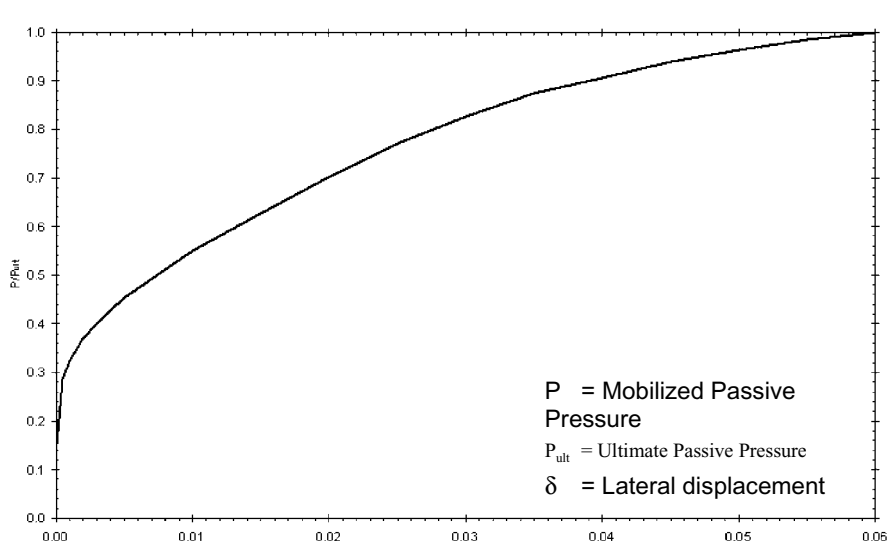

FIG. 8-6. Passive Pressure Mobilization Curve

single large-diameter piles or drilled shafts larger than 24 in. in diameter shall comply with the requirements of Section 8.4.4.

8.4.3.1 Stiffness Parameters The uncoupled spring model shown in Fig. 8-1(b) shall be used to represent the stiffness of a pile foundation where the footing in the figure represents the pile cap. When calculating the vertical and rocking springs, the contribution of the soil immediately beneath the pile cap shall be neglected. The total lateral stiffness of a pile group shall include the contributions of the piles (with an appropriate modification for group effects) and the passive resistance of the pile cap. The lateral stiffness of piles shall be based on classical methods or on analytical solutions using approved beam–column pile models. The lateral stiffness contribution of the pile cap shall be calculated using the passive pressure mobilization curve in Fig. 8-6. Alternatively, it shall be acceptable to analyze the response of pile foundations based on methods that are based on or have been calibrated to test data.

Pile group axial spring stiffness values, k_{sv}, shall be calculated using Eq. (8-13).

$$k_{sv} = \sum_{n=1}^{N} \frac{AE}{L} \tag{8-13}$$

where A = cross-sectional area of a pile;
E = modulus of elasticity of piles;
L = length of piles; and
N = number of piles in group.

The rocking spring stiffness values about each horizontal pile cap axis shall be computed by modeling each pile axial spring as a discrete Winkler spring. The rotational spring constant, k_{sr}, (moment per unit rotation) shall be calculated using Eq. (8-14):

$$k_{sr} = \sum_{n=1}^{N} k_{vn} S_n^2 \tag{8-14}$$

where k_{vn} = axial stiffness of the nth pile; and
S_n = distance between nth pile and axis of rotation.

C8.4.3.1 Stiffness Parameters Because the passive pressure resistance of pile caps may be a significant part of the total capacity strength, it may not be appropriate to base the force–displacement response on the initial, effective stiffness alone. Instead, the contribution of passive pressure should be based on the passive pressure mobilization curve provided in Fig. 8-6. In lieu of using the default properties of Fig. 8-6, which can considerably underestimate strength and stiffness, it is acceptable to use more advanced methods, such as the one presented in Mokwa and Duncan (2000).

Although the effects of group action and the influence of pile batter are not directly accounted for in the form of the above equations, it can be reasonably assumed that the latter effects are accounted for in the range of uncertainties that must be considered in accordance with Section 8.4.1. The method presented in Mokwa and Duncan (2000) does quantify pile group effects.

8.4.3.2 Capacity Parameters The expected axial capacity of piles in compression and tension shall be determined using the procedures in Section 8.4.1. The expected axial capacity in tension shall not exceed the lower-bound capacity of the foundation structural components.

The moment capacity of a pile group shall be determined assuming a rigid pile cap. Lower-bound moment capacity shall be based on triangular distribution of axial pile loading and lower-bound axial capacity of the piles. Upper-bound moment capacity shall be based on a rectangular distribution of axial pile load using full, upper-bound axial capacity of the piles.

The lateral capacity of a pile group shall include the contributions of the piles (with an appropriate modification for group effects) and the passive resistance of the pile cap. The lateral capacity of the piles shall be calculated using the same method used to calculate the stiffness. The lateral capacity of the pile cap, because of passive pressure, shall be calculated using established principles of soil mechanics. Passive pressure mobilization shall be calculated using Fig. 8-6. Alternatively, it shall be acceptable to analyze the response of pile foundations based on methods that are based on or have been calibrated to test data.

C8.4.3.2 Capacity Parameters The lateral capacity of a pile cap should be calculated in the same way that the capacity of a shallow foundation is computed, except that the contribution of base traction should be neglected. Section C8.4.2.6 provides a more detailed description of the calculation procedure. The method presented in Mokwa and Duncan (2000) provides a comprehensive approach to calculating the capacity contribution of pile caps to the lateral resistance of piles and pile groups.

8.4.4 Drilled Shafts The stiffness and capacity of drilled shaft foundations and piers of diameter less than or equal to 24 in. shall be calculated using the requirements for pile foundations specified in Section 8.4.3. For drilled shaft foundations and piers of diameter greater than 24 in., the capacity shall be calculated based on the interaction of the soil and shaft where the soil shall be represented using Winkler-type models specified in Section 8.4.3.

C8.4.4 Drilled Shafts Where the diameter of the shaft becomes large (> 24 in.), the bending and the lateral stiffness and strength of the shaft itself may contribute to the overall capacity. This size is obviously necessary for the case of individual shafts supporting isolated columns.

8.4.5 Deep Foundation Acceptance Criteria The foundation soil shall comply with the acceptance criteria specified in this section. The structural components of foundations shall meet the appropriate requirements of Chapters 9 through 12. The foundation soil shall be evaluated to support all actions, including vertical loads, moments, and seismic forces applied to the soil by the foundation.

8.4.5.1 Linear Procedures The acceptance criteria for foundation soil analyzed by linear procedures shall be based on the modeling assumptions for the base of the structure specified in Section 8.4.5.1.1 or 8.4.5.1.2.

8.4.5.1.1 Fixed-Base Assumption If the base of the structure is assumed to be completely rigid, the foundation soil at the soil–foundation interface shall be classified as deformation controlled. Component actions shall be determined by Eq. (7-34). Acceptance criteria shall be based on Eq. (7-36); m-factors for foundation soil shall be 1.5 for Immediate Occupancy, 3 for Life Safety, and 4 for Collapse Prevention, and the use of upper-bound component capacities shall be permitted. A fixed-base assumption shall not be used for buildings being evaluated or retrofitted to the Immediate Occupancy Performance Level that are sensitive to base rotations or other types of foundation movement that would cause the structural components to exceed their acceptance criteria.

8.4.5.1.2 Flexible-Base Assumption If the base of the structure is assumed to be flexible and is modeled using linear foundation soil at the soil–foundation interface, then the foundation soil shall be classified as deformation controlled. Component actions

shall be determined by Eq. (7-36). Soil strength need not be evaluated. Acceptability of soil displacements shall be based on the ability of the structure to accommodate these displacements within the acceptance criteria for the selected performance objective.

8.4.5.2 Nonlinear Procedures The acceptance criteria for foundation soil analyzed by nonlinear procedures shall be based on the modeling assumptions for the base of the structure specified in Section 8.4.5.2.1 or 8.4.5.2.2.

8.4.5.2.1 Fixed-Base Assumption If the base of the structure is assumed to be completely rigid, then the base reactions for all foundations shall be classified as force controlled, as determined by Eq. (7-37), and shall not exceed upper-bound component capacities. A fixed-base assumption shall not be used for buildings being evaluated or retrofitted for the Immediate Occupancy Performance Level that are sensitive to base rotations or other types of foundation movement that would cause the structural components to exceed their acceptance criteria.

8.4.5.2.2 Flexible-Base Assumption If the base of the structure is assumed to be flexible and is modeled using flexible nonlinear foundations, then the foundation soil shall be classified as deformation controlled and the displacements at the base of the structure and foundation shall not exceed the acceptance criteria of this section. For the Life Safety and Collapse Prevention Structural Performance Levels, acceptability of soil displacements shall be based on the ability of the structure and foundation to accommodate these displacements within the acceptance criteria for the selected performance objective. For the Immediate Occupancy Structural Performance Level, the permanent, nonrecoverable displacement of the foundation soil at the soil–foundation interface shall be calculated by an approved method based on the maximum total displacement, foundation and soil type, thickness of soil layers, and other pertinent factors. The acceptability of these displacements shall be based upon the ability of the structure and foundation to accommodate them within the acceptance criteria for the Immediate Occupancy Structural Performance Level.

8.5 KINEMATIC INTERACTION AND RADIATION DAMPING SOIL–STRUCTURE INTERACTION EFFECTS

Where required by Section 7.2.7, soil–structure interaction effects shall be calculated in accordance with Section 8.5.1 for kinematic interaction effects and Section 8.5.2 for foundation damping effects.

C8.5 KINEMATIC INTERACTION AND RADIATION DAMPING SOIL–STRUCTURE INTERACTION EFFECTS

Foundation flexibility is covered in Section 8.4. SSI effects that serve to reduce the shaking input to the structure relative to the free-field motion (kinematic interaction and damping) are covered in this section. Procedures for calculating kinematic and damping effects were taken from recommendations in FEMA 440 (2005) and have been included in the FEMA 368 (2001) and FEMA 450, *NEHRP Recommended Provisions for Seismic Regulations for New Buildings and Other Structures* (2004) for a number of years. Further discussion of SSI effects can be found in FEMA 440 (2005) and NIST GCR 12-917-21 (ATC, 2012).

8.5.1 Kinematic Interaction Kinematic interaction effects shall be represented by ratio of response spectra (*RRS*) factors RRS_{bsa} for base slab averaging, and RRS_e for embedment, which are multiplied by the spectral acceleration ordinates on the response spectrum calculated in accordance with Section 2.4. Reduction of the response spectrum for kinematic interaction effects shall be permitted subject to the limitations in Sections 8.5.1.1 and 8.5.1.2.

The product of $RRS_{bsa} \times RRS_e$ shall not be less than 0.5.

8.5.1.1 Base Slab Averaging The *RRS* factor for base slab averaging, RRS_{bsa}, shall be determined using Eq. (8-15) for each period of interest. Reductions for base slab averaging shall not be permitted for buildings with the following characteristics:

1. Located on soft clay sites (Site Classes E and F);
2. Floor and roof diaphragms classified as flexible and foundation components that are not laterally connected;

$$RRS_{bsa} = 0.25 + 0.75 \times \left\{ \frac{1}{b_0^2}\left[1 - \exp\left(-2b_0^2\right) \times B_{bsa}\right] \right\}^{1/2} \quad (8\text{-}15)$$

where

$$B_{bsa} = \begin{cases} 1 + b_0^2 + b_0^4 + \dfrac{b_0^6}{2} + \dfrac{b_0^8}{4} + \dfrac{b_0^{10}}{12} & b_0 \le 1 \\ \exp\left(2b_0^2\right)\left[\dfrac{1}{\sqrt{\pi}b_0}\left(1 - \dfrac{1}{16b_0^2}\right)\right] & b_0 > 1 \end{cases} \quad (8\text{-}16)$$

$$b_0 = 0.0001 \times \left(\frac{2\pi b_e}{T}\right) \quad (8\text{-}17)$$

b_e = effective foundation size in feet;

$$b_e = \sqrt{A_{\text{base}}} \le 260\text{ft.}; \quad (8\text{-}18)$$

T = fundamental period of the building in seconds, computed based on a model with a flexible base condition per 8.4.2, which shall not be taken as less than 0.20 s when used in Eq. (8-17); and

A_{base} = area of the foundation footprint if the foundation components are interconnected laterally (ft^2).

C8.5.1.1 Base Slab Averaging For base slab averaging effects to occur, foundation components must be interconnected with grade beams or concrete slabs. The concept of base slab and the basis for the provisions in ASCE 41-06 (2006) can be found in FEMA 440 (2005). The basis for the current equation and additional background material can be found in NIST GCR 12-917-21 (2012). Because this reduction relies heavily on the period of the building, the building period must include the flexibility of the foundation so that the period is not underestimated, leading to an unconservative reduction.

The underlying models have only been studied up to an effective size of 260 ft, which is why that limitation has been placed on Eq. (8-18).

Because the reduction can become quite significant and there has not been a thorough study of this phenomenon, a 0.75 factor is applied to temper the reductions.

The method has not been rigorously studied for buildings on piles; however, it is considered reasonable to extend the application to pile-supported structures in which the pile caps are in contact with the soil and are laterally connected to one another.

8.5.1.2 Embedment The *RRS* factor for embedment, RRS_e, shall be determined using Eq. (8-19) for each period of interest. Reductions for embedment shall not be permitted for buildings with the following characteristics:

1. Located on firm rock sites (Site Classes A and B), or soft clay sites (Site Classes E and F); and

2. Foundation components that are not laterally connected.

$$RRS_e = 0.25 + 0.75 \times \cos\left(\frac{2\pi e}{Tv_s}\right) \geq 0.50 \qquad (8\text{-}19)$$

where e = foundation embedment depth in feet. A minimum of 75% of the foundation footprint shall be present at the embedment depth. The foundation embedment for buildings located on sloping sites shall be the shallowest embedment;

T = fundamental period of the building in seconds, computed based on a model with a flexible base, which shall not be taken as less than 0.20 s when used in Eq. (8-19);

v_s = effective shear wave velocity for site soil conditions, taken as average value of velocity over the embedment depth of the foundation (ft/s), or approximated as nv_{s0}

v_{s0} = shear wave velocity for site soil conditions at low strains, taken as average value of velocity over the embedment depth of the foundation (ft/s);

n = shear wave velocity reduction factor;

$n = \sqrt{G/G_o}$; and

G/G_o = effective shear modulus ratio from Table 8-2.

C8.5.1.2 Embedment The embedment effect model was largely based on studies of buildings with basements. The recommendations can also be applied to buildings with embedded foundations without basements where the foundation is laterally connected. However, the embedment effect factor is not applicable to embedded individual spread footings.

As with base slab averaging, this reduction relies heavily on the period of the building; the building period must include the flexibility of the foundation so that the period is not underestimated, leading to an unconservative reduction. Also, because the reduction can become quite significant and there has not been a thorough study of this phenomenon, a 0.75 factor is applied to temper the reductions.

8.5.2 Foundation Damping Soil–Structure Interaction Effects The effects of foundation damping for nonlinear analyses shall be represented by the effective damping ratio of the structure–foundation system, β_0, determined in accordance with Eq. (8-20). Modification of the acceleration response spectrum calculated in accordance with Section 2.4 using β_0 in lieu of the effective viscous damping ratio, β, shall be permitted except where

1. Vertical lateral-force-resisting elements are spaced at a distance less than the larger dimension of either component in the direction under consideration;
2. $v_sT/r_x > 2\pi$ (where v_s = average shear wave velocity to a depth of r_x) and the shear stiffness of foundation soils increases with depth; or
3. The soil profile consists of a soft layer overlying a very stiff material, and the system period is greater that the first-mode period of the layer.

$$\beta_0 = \beta_f + \frac{\beta}{\left(\tilde{T}_{\text{eff}}/T_{\text{eff}}\right)^3} \leq 20 \qquad (8\text{-}20)$$

where β_f = foundation–soil interaction damping ratio, as defined in Eq. (8-21);

β = effective viscous damping ratio of the building; and

$\tilde{T}_{\text{eff}}/T_{\text{eff}}$ = effective period lengthening ratio, as defined in Eq. (8-29).

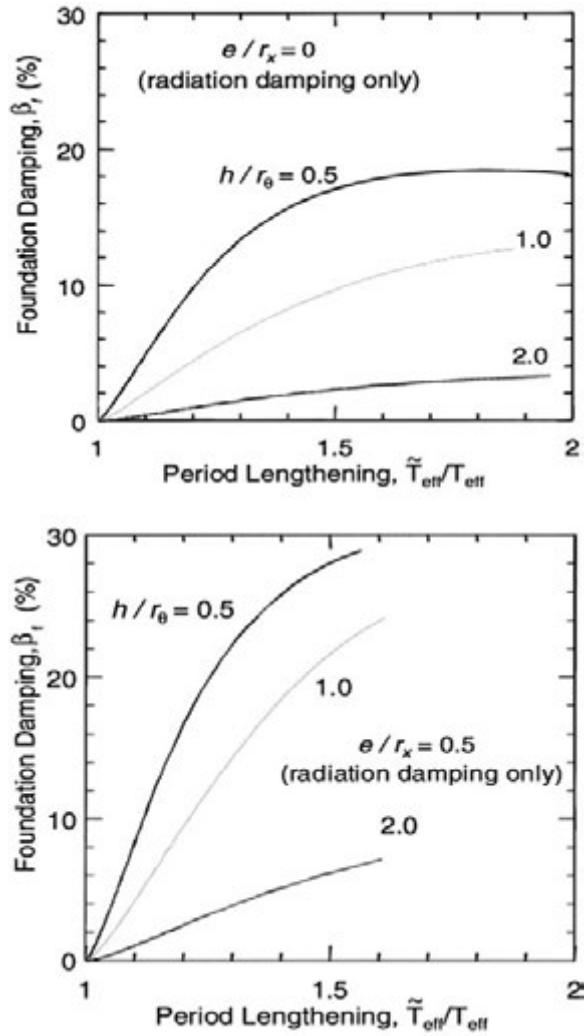

FIG. 8-7. Approximations of Foundation Damping, β_f

The foundation damping caused by radiation damping, β_f, shall be determined in accordance with Eq. (8-21). Alternatively, foundation damping caused by radiation damping shall be approximated using Fig. 8-7.

$$\beta_f = a_1\left(\frac{\tilde{T}_{\text{eff}}}{T_{\text{eff}}} - 1\right) + a_2\left(\frac{\tilde{T}_{\text{eff}}}{T_{\text{eff}}} - 1\right)^2 \qquad (8\text{-}21)$$

where $a_1 = c_e\exp(4.7 - 1.6h/r_\theta)$;

$a_2 = c_e[25\ \ln(h/r_\theta) - 16]$;

$c_e = 1.5(e/r_x) + 1$;

h = effective structure height taken as the vertical distance from the foundation to the centroid of the first mode shape for multistory structures. Alternatively, h shall be permitted to be approximated as 70% of the total structure height for multistory structures or as the full height of the building for one-story structures;

$$h = \frac{\sum_{i=1}^{N} w_i\phi_{i1}h_i}{\sum_{i=1}^{N} w_i\phi_{i1}} \qquad (8\text{-}22)$$

r_θ = equivalent foundation radius for rotation;

$$r_\theta = \left(\frac{3(1-\nu)K_\theta}{8G}\right)^{\frac{1}{3}} \tag{8-23}$$

K_θ = effective rotational stiffness of the foundation;

$$K_\theta = \frac{K^*_{fixed}(h)^2}{\left(\frac{\tilde{T}}{T}\right)^2 - 1 - \frac{K^*_{fixed}}{K_x}} \tag{8-24}$$

$$K^*_{fixed} = M^*\left(\frac{2\pi}{T}\right)^2; \tag{8-25}$$

M^* = effective mass for the first mode. Alternatively, it shall be permitted to take the effective mass as 70% of the total building mass, except where the mass is concentrated at a single level. Then it shall be taken as the total building mass;

$$M^* = \frac{W}{g}\left\{\frac{\left[\sum_{i=1}^{N}(w_i\phi_{i1})/g\right]^2}{\left[\sum_{i=1}^{N}w_i/g\right]\left[\sum_{i=1}^{N}(w_i\phi_{i1}^2)/g\right]}\right\} \tag{8-26}$$

W = total building weight;
w_i = portion of the effective seismic weight located on or assigned to floor level i;
ϕ_{i1} = first mode displacement at level i;
K_x = effective translational stiffness of the foundation;

$$K_x = \frac{8}{2-\nu}Gr_x \tag{8-27}$$

G = effective shear modulus;
ν = Poisson's ratio; it shall be permitted to use 0.3 for sand and 0.45 for clay soils;
e = foundation embedment depth in feet;
r_x = equivalent foundation radius for translation;

$$r_x = \sqrt{A_{base}/\pi} \tag{8-28}$$

A_{base} = area of the foundation footprint if the foundation components are interconnected laterally;
T = fundamental period of the building using a model with a fixed base in seconds; and
$\tilde{T}$ = fundamental period of the building using a model with a flexible base in seconds.

The effective period lengthening ratio shall be determined in accordance with Eq. (8-29).

$$\frac{\tilde{T}_{eff}}{T_{eff}} = \left\{1 + \frac{1}{\mu}\left[\left(\frac{\tilde{T}}{T}\right)^2 - 1\right]\right\}^{0.5} \tag{8-29}$$

where μ = expected ductility demand. For nonlinear procedures, μ is the maximum displacement divided by the yield displacement (δ_t/Δ_y for NSP). For linear procedures, μ is the maximum base shear divided by the elastic base shear capacity.

C8.5.2 Foundation Damping Soil–Structure Interaction Effects
Foundation damping effects tend to be important for stiff structural systems such as shear walls and braced frames, particularly where they are supported on relatively soft soil sites, such as Site Classes D and E. The procedure is conservative where foundation aspect ratios exceed 2:1 and where foundations are deeply embedded ($e/r_x > 0.5$), but it is potentially unconservative where wall and frame elements are close enough so that waves emanating from distinct foundation components destructively interfere with each other across the period range of interest.

The damping ratios determined in accordance with this section represent radiation damping effects only. See FEMA 440 (2005) for further discussion of foundation damping SSI effects, including limitations.

8.6 SEISMIC EARTH PRESSURE

Building walls retaining soil shall be evaluated to resist additional earth pressure caused by seismic forces. Unless otherwise determined from a site-specific geotechnical investigation, the seismic earth pressure acting on a building wall retaining unsaturated, level soil above the groundwater table shall be calculated using Eq. (8-30):

$$\Delta p = 0.4k_h\gamma_t H_{rw} \tag{8-30}$$

where Δp = additional earth pressure caused by seismic shaking, which is assumed to be a uniform pressure;
k_h = horizontal seismic coefficient in the soil, which may be assumed equal to $S_{XS}/2.5$;
γ_t = total unit weight of soil;
H_{rw} = height of the retaining wall; and
S_{XS} = spectral response acceleration parameter, as specified in Section 2.4.

The seismic earth pressure shall be added to the unfactored static active earth pressure to obtain the total earth pressure on the wall. The wall shall be evaluated as a force-controlled component using acceptance criteria based on the type of wall construction and approved methods.

C8.6 SEISMIC EARTH PRESSURE

Past earthquakes have not caused extensive damage to building walls below grade. In some cases, however, it is advisable to verify the adequacy of retaining walls to resist increased pressure caused by seismic loading. These situations include walls of poor construction quality, unreinforced or lightly reinforced walls, walls of archaic materials, unusually tall or thin walls, damaged walls, or other conditions implying a sensitivity to increased loads.

The expression in Eq. (8-30) is a simplified approximation of the Mononobe–Okabe formulation. The actual magnitude and distribution of pressure on walls during earthquakes is very complex. If walls do not have the apparent capacity to resist the pressures estimated from the previously described approximate procedures, detailed investigation by a qualified geotechnical engineer is recommended. The seismic earth pressure from this equation is added to the unfactored static active earth pressure, which includes pressure caused by soil, water, and surcharge loads.

Seismic earth pressures calculated in accordance with this section are intended for use in checking acceptability of local wall components and should not be used to increase total base shear on the building.

8.7 FOUNDATION RETROFIT

Foundation retrofit schemes shall be evaluated in conjunction with any retrofit of the superstructure and according to the general principles and requirements of this standard to ensure that the complete retrofit achieves the selected Building Performance Level for the selected Seismic Hazard Level. Where new retrofit components are used in conjunction with existing components, the effects of differential foundation stiffness on the modified structure shall be demonstrated to meet the acceptance

criteria. If existing loads are not redistributed to all the components of the foundation by shoring and/or jacking, the effects of differential strengths and stiffnesses among individual foundation components shall be included in the analysis of the foundation. The effects of a retrofit on stiffness, strength, and deformability shall be taken into account in an analytical model of the building. The compatibility of new and existing components shall be checked at displacements consistent with the Performance Level chosen.

C8.7 FOUNDATION RETROFIT

Guidance for modification of foundations to improve seismic performance is provided as follows:

Soil material improvements. Improvement in existing soil materials may be effective in the retrofit of foundations by achieving one or more of the following results: (1) improvement in vertical bearing capacity of footing foundations; (2) increase in the lateral frictional resistance at the base of footings; and (3) increase in the passive resistance of the soils adjacent to foundations or grade beams.

Soil improvement options to increase the vertical bearing capacity of footing foundations are limited. Soil removal and replacement and soil vibratory densification usually are not feasible because they would induce settlements beneath the footings or would be expensive to implement without causing settlement. Grouting may be considered to increase bearing capacity. Different grouting techniques are discussed in FEMA 274, Section C4.3.2 (1997b). Compaction grouting can achieve densification and strengthening of a variety of soil types and/or extend foundation loads to deeper, stronger soils. The technique requires careful control to avoid causing uplift of foundation components or adjacent floor slabs during the grouting process. Permeation grouting with chemical grouts can achieve substantial strengthening of sandy soils, but the more fine-grained or silty the sand, the less effective the technique becomes. Jet grouting could also be considered. These same techniques also may be considered to increase the lateral frictional resistance at the base of footings.

Soil improvement by the following methods may be effective in increasing the passive resistance of soils adjacent to foundations or grade beams: removal and replacement of existing soils with stronger, well compacted soils or with treated (e.g., cement-stabilized) soils; in-place mixing of existing soils with strengthening materials (e.g., cement); grouting, including permeation grouting and jet grouting; and in-place densification by impact or vibratory compaction. In-place densification by impact or vibratory compaction should be used only if the soil layers to be compacted are not too thick and vibration effects on the structure are tolerable.

Shallow foundation retrofit. The following measures may be effective in the retrofit of shallow foundations:

1. New isolated or spread footings may be added to existing structures to support new structural elements such as shear walls or frames.
2. Existing isolated or spread footings may be enlarged to increase bearing or uplift capacity. Consideration of existing contact pressures on the strength and stiffness of the modified footing may be required unless uniform distribution is achieved by shoring and/or jacking.
3. Existing isolated or spread footings may be underpinned to increase bearing or uplift capacity. Underpinning improves bearing capacity by lowering the contact horizon of the footing. Consideration of the effects of jacking and load transfer may be required.
4. Uplift capacity may be improved by increasing the resisting soil mass above the footing.
5. Mitigation of differential lateral displacement of different portions of a building foundation may be carried out by provision of interconnection with grade beams, reinforced grade slabs, or ties.

Deep foundation retrofit. The following measures may be effective in the retrofit of deep foundation consisting of driven piles made of steel, concrete, wood, cast-in-place concrete piers, or drilled shafts of concrete.

Shallow foundations of spread footings or mats may be provided to support new shear walls or frames or other new elements of the lateral-force-resisting system, provided that the effects of differential foundation stiffness on the modified structure are analyzed and meet the acceptance criteria.

New wood piles may be provided for an existing wood pile foundation. A positive connection should be provided to transfer the uplift forces from the pile cap or foundation above to the new wood piles. Existing wood piles should be inspected for deterioration caused by decay, insect infestation, or other signs of distress before undertaking evaluation of existing wood pile foundation.

Driven piles made of steel, concrete, wood, cast-in-place concrete piers, or drilled shafts of concrete may be provided to support new structural elements such as shear walls or frames.

Driven piles made of steel, concrete, wood, cast-in-place concrete piers, or drilled shafts of concrete may be provided to supplement the vertical and lateral capacities of existing pile and pier foundation groups.

However, driving new piles may induce settlement in the existing foundation elements, and that possibility should be considered when designing the retrofit. Because of that problem, pin piles or auger cast piles may be preferable because they can be installed without inducing much settlement to the existing structure.

CHAPTER 9
STEEL

9.1 SCOPE

This chapter sets forth requirements for the seismic evaluation and retrofit of steel components of the seismic-force-resisting system of an existing building. The requirements of this chapter shall apply to existing steel components of a building system, retrofitted steel components of a building system, and new steel components added to an existing building system.

Section 9.2 specifies data collection procedures for obtaining material properties and performing condition assessments. Section 9.3 specifies general analysis and design requirements for steel components. Sections 9.4, 9.5, 9.6, and 9.7 provide modeling procedures, component strengths, acceptance criteria, and retrofit measures for steel moment-resisting frames, steel braced frames, steel plate shear walls, and steel frames with infills, respectively. Section 9.8 provides modeling procedures, strengths, acceptance criteria, and retrofit measures for diaphragms used in steel structures. Section 9.9 specifies requirements for steel piles. Section 9.10 specifies requirements for components of cast or wrought iron.

C9.1 SCOPE

Techniques for repair of earthquake-damaged steel components are not included in this standard. The design professional is referred to SAC joint venture publications FEMA 350 (2000a), 351 (2000b), 352 (2000c), and 353 (2000d) for information on design, evaluation, and repair of damaged steel moment-resisting frame structures.

Great care should be exercised in selecting the appropriate retrofit approaches and techniques for application to historic buildings to preserve their unique characteristics.

9.2 MATERIAL PROPERTIES AND CONDITION ASSESSMENT

9.2.1 General Mechanical properties for steel materials and components shall be based on available construction documents and as-built conditions for the particular structure, as specified in Section 3.2. Where such documentation fails to provide adequate information to quantify material properties or document the condition of the structure, such documentation shall be supplemented by material tests and assessments of existing conditions, as required in Section 6.2.

Material properties of existing steel components shall be determined in accordance with Section 9.2.2. A condition assessment shall be conducted in accordance with Section 9.2.3. The extent of materials testing and condition assessment performed shall be used to determine the knowledge factor, as specified in Section 9.2.4.

Use of material properties based on historical information as default values shall be permitted as specified in Section 9.2.2.5.

C9.2.1 General The extent of in-place materials testing and condition assessment that must be accomplished is related to availability and accuracy of construction and as-built records, the quality of materials used and construction performed, and the physical condition of the structure. Data such as the properties and grades of material used in component and connection fabrication may be effectively used to reduce the amount of in-place testing required. The design professional is encouraged to research and acquire all available records from original construction.

Steel components of buildings include columns, beams, braces, connections, link beams, and diaphragms. Columns, beams, and braces may be built up with plates, angles, and/or channels connected together with rivets, bolts, or welds. The material used in older construction is likely to be mild steel with a specified yield strength between 30 kip/in.^{2} and 36 kip/in.^{2}. Cast iron was often used for columns in much older construction, from before 1900 through the 1920s. Cast iron was gradually replaced by wrought iron and then by steel. The connectors in older construction were usually mild steel rivets or bolts. These were later replaced by high-strength bolts and welds. The seismic performance of these components depends heavily on the condition of the in-place material. A more detailed historical perspective is given in Section C9.2 of FEMA 274 (1997b).

9.2.2 Properties of In-Place Materials and Components

9.2.2.1 Material Properties

9.2.2.1.1 General The following component and connection material properties shall be obtained for the as-built structure:

1. Yield and tensile strength of the base material;
2. Yield and tensile strength of the connection material; and
3. Carbon equivalent of the base and connection material.

Structural steel components constructed after 1900 shall be classified based on ASTM specification and material grade and, if applicable, shape group in accordance with Table 9-1. Lower-bound material properties shall be taken in accordance with Table 9-1 for material conforming to the specifications listed therein. For material grades not listed in Table 9-1, lower-bound material properties shall be taken as nominal or specified properties or shall be based on tests where the material grade or specified value is not known.

Default lower-bound material properties for archaic materials constructed before 1900 shall be taken in accordance with Table 9-2.

Table 9-1. Default Lower-Bound Material Strengths

Date	Specification	Remarks	Tensile Strength[a], kip/in.^{2}	Yield Strength[a], kip/in.^{2}
1900	ASTM A9	Rivet steel	50	30
	Buildings	Medium steel	60	35
1901–1908	ASTM A9	Rivet steel	50	30
	Buildings	Medium steel	60	30
1909–1923	ASTM A9	Structural steel	55	28
	Buildings	Rivet steel	50	30
1924–1931	ASTM A7	Structural steel	55	30
		Rivet steel	50	30
	ASTM A9	Structural steel	55	30
		Rivet steel	50	30
1932	ASTM A140-32T issued as a tentative revision to ASTM A9 (Buildings)	Plates, shapes, bars	60	33
		Eyebar flats (unannealed)	67	36
1933	ASTM A140-32T discontinued and ASTM A9 (Buildings) revised Oct. 30, 1933	Structural steel	55	30
	ASTM A9 tentatively revised to ASTM A9-33T (Buildings)	Structural steel	60	33
	ASTM A141-32T adopted as a standard	Rivet steel	52	30
1934–Present	ASTM A9	Structural steel	60	33
	ASTM A141	Rivet steel	52	30
1961–1990	ASTM A36	Structural steel		
	Group 1		62	44
	Group 2		59	41
	Group 3		60	39
	Group 4		62	37
	Group 5		70	41
1961–Present	ASTM A572, Grade 50	Structural steel		
	Group 1		65	50
	Group 2		66	50
	Group 3		68	51
	Group 4		72	50
	Group 5		77	50
1990–Present	ASTM A36 and Dual Grade	Structural steel		
	Group 1		66	49
	Group 2		67	50
	Group 3		70	52
	Group 4		70	49
1998–Present	ASTM A992	Structural steel	65	50

NOTES: Lower-bound values for material before 1960 are based on minimum specified values. Lower-bound values for material after 1960 are mean minus one standard deviation values from statistical data. Rivet yield strengths are based upon measured data reported in journal articles for the period. Properties are based on ASTM and AISC structural steel specification stresses.
[a]The indicated values are representative of material extracted from the flanges of wide flange shapes.

Table 9-2. Default Lower-Bound Material Strengths for Archaic Materials

Year	Material	Lower-Bound Yield Strength, kip/in.^{2}	Lower-Bound Tensile Strength, kip/in.^{2}
Pre-1900	Cast iron	18	—
Pre-1900	Steel	24	36

NOTES: Modified from unit stress values in *Iron and Steel Beams from 1873 to 1952* (AISC 1983). Properties based on tables of allowable loads as published in mill catalogs.

Where materials testing is required by Section 6.2, test methods to determine ASTM designation and material grade or to quantify material properties shall be as specified in Section 9.2.2.3.

The minimum number of tests shall comply with the requirements of Section 9.2.2.4.

Where welding to existing steel components is required as part of a retrofit, the carbon equivalent of the existing components shall be determined to establish weldability of the material, unless it is confirmed that the existing material conforms with a weldable material specification. The welding procedures shall be determined based on the chemistry of the base material and filler material, as specified in Section 8 of AWS D1.1. Material conforming to ASTM A36, ASTM A242, ASTM A307, ASTM A572, ASTM A913, ASTM A972, and ASTM A992 shall be deemed to be weldable.

C9.2.2.1.1 General Mechanical properties of component and connection material dictate the structural behavior of the component under load. Mechanical properties of greatest interest include the expected and lower-bound estimates of yield (F_{ye}) and tensile (F_{te}) strengths of base and connection material, modulus of elasticity, ductility, toughness, elongational characteristics, and weldability.

Expected material properties should be used for deformation-controlled actions. Lower-bound material properties should be used for force-controlled actions.

Tensile groups can be determined using Table 1-2 from *Manual for Steel Construction, Load and Resistance Factor Design (LRFD)*, 2nd Ed. (AISC 1998).

9.2.2.1.2 Nominal Properties Nominal material properties specified in AISC 360 or properties specified in construction documents shall be taken as lower-bound material properties. Corresponding expected material properties shall be calculated by multiplying lower-bound values by an appropriate factor taken from Table 9-3 to translate from lower-bound to expected values.

Table 9-3. Factors to Translate Lower-Bound Steel Properties to Expected-Strength Steel Properties

Property	Year	Specification	Factor
Tensile strength	Before 1961		1.10
Yield strength	Before 1961		1.10
Tensile strength	1961–1990	ASTM A36	1.10
	1961–Present	ASTM A572, Group 1	1.10
		ASTM A572, Group 2	1.10
		ASTM A572, Group 3	1.05
		ASTM A572, Group 4	1.05
		ASTM A572, Group 5	1.05
	1990–Present	ASTM A36 and Dual Grade, Group 1	1.05
		ASTM A36 and Dual Grade, Group 2	1.05
		ASTM A36 and Dual Grade, Group 3	1.05
		ASTM A36 and Dual Grade, Group 4	1.05
	1998–Present	ASTM A992	1.10
Yield strength	1961–1990	ASTM A36	1.10
	1961–Present	ASTM A572, Group 1	1.10
		ASTM A572, Group 2	1.10
		ASTM A572, Group 3	1.05
		ASTM A572, Group 4	1.10
		ASTM A572, Group 5	1.05
	1990–Present	ASTM A36, Plates	1.10
		ASTM A36 and Dual Grade, Group 1	1.05
		ASTM A36 and Dual Grade, Group 2	1.10
		ASTM A36 and Dual Grade, Group 3	1.05
		ASTM A36 and Dual Grade, Group 4	1.05
	1998–Present	ASTM A992	1.10
Tensile strength	All	Not listed[a]	1.10
Yield strength	All	Not listed[a]	1.10

[a]For materials not conforming to one of the listed specifications.

Where construction documents indicate the ultimate tensile strength of weld metal, the lower-bound strength of welds shall be taken as indicated in AWS D1.1. For construction predating 1970, use of a nominal ultimate weld tensile strength of 60 kip/in.^{2} shall be permitted.

9.2.2.2 Component Properties The following properties of components and their connections shall be obtained for the structure:

1. Size and thickness of connected materials, including cover plates, bracing, and stiffeners;
2. Cross-sectional area, section moduli, moments of inertia, and torsional properties of components at critical sections;
3. As-built configuration of intermediate, splice, and end connections; and
4. Current physical condition of base metal and connector materials, including presence of deformation and extent of deterioration.

Review of available construction documents shall be performed to identify primary vertical- and lateral-load-carrying elements and systems, critical components and connections, and any modifications to components or overall configuration of the structure.

In the absence of deterioration, use of the nominal cross-sectional dimensions of components published by AISC, AISI, and other approved trade associations shall be permitted.

9.2.2.3 Test Methods to Quantify Properties Laboratory testing of samples to determine in-place mechanical properties of materials and components shall be performed in compliance with consensus standards published by ASTM, ANSI, and other approved organizations.

The extent of in-place materials testing required to determine material properties shall be based on the data collection requirements in Section 6.2.

The determination of material properties shall be accomplished through removal of samples and laboratory testing. Sampling shall take place in regions where the decreased section strength caused by the sampling remains higher than the capacity required at the reduced section to resist the design loads. Alternately, where the reduced section strength caused by sampling becomes lower than the required capacity, the lost section shall be temporarily supported and restored by repairs to the section.

If a connector such as a bolt or rivet is removed for testing, a comparable bolt shall be reinstalled at the time of sampling. Destructive removal of a welded connection sample shall be accompanied by repair of the connection.

Expected material properties shall be based on mean test values. Lower-bound material properties shall be based on mean test values minus one standard deviation, except that where the material is positively identified as conforming to a defined standard material specification, lower-bound properties need not be taken as less than the nominal properties for that specification.

C9.2.2.3 Test Methods to Quantify Properties FEMA 274 (1997b) provides information and references for several test methods.

Sampling should take place in regions where the calculated stresses (considering the lost section caused by sampling) for the applied loads is less than the allowable stress, where using allowable stress design (ASD), and less than the capacity where using load and resistance factor design (LRFD).

Of greatest interest to steel building system performance are the expected yield and tensile strength of the installed materials. Notch toughness of structural steel and weld material is also important for connections that undergo cyclic loadings and deformations during earthquakes. Chemical and metallurgical properties can provide information on properties such as compatibility of welds with parent metal and potential lamellar tearing caused by through-thickness stresses. Virtually all steel component elastic and inelastic limit states are related to yield and tensile strengths. Past research and accumulation of data by industry groups have resulted in published material mechanical properties for most primary metals and their dates of fabrication. Section 9.2.2.5 provides default properties. This information may be used, together with tests from recovered samples, to rapidly establish expected strength properties for use in component strength and deformation analyses.

Review of other properties derived from laboratory tests, such as hardness, impact, fracture, and fatigue, is generally not needed for steel component capacity determination, but it may be required for archaic materials and connection evaluation. These properties may not be needed in the analysis phase if significant retrofit measures are already known to be required.

To quantify material properties and analyze the performance of welded moment connections, more extensive sampling and testing may be necessary. This testing may include base and weld material chemical and metallurgical evaluation, expected strength determination, hardness, and Charpy V-notch testing of the heat-affected zone and neighboring base metal, and other tests depending on connection configuration.

Recommendations given in FEMA 351 (2000b) may also be followed to select welding procedures for welding of retrofit measures to existing components.

9.2.2.4 Minimum Number of Tests Materials testing is not required if material properties are available from original construction documents that include material test records or material test reports. If such properties differ from default material properties given in Tables 9-1 and 9-2, material properties for evaluation and retrofit shall be selected such that the largest demands on components and connections are generated.

C9.2.2.4 Minimum Number of Tests To quantify expected strength and other properties accurately, a minimum number of tests may be required to be conducted on representative components.

The evaluating engineer should exercise judgment to determine how much variability of component sizes constitutes a significant change in material properties. It is likely that most of the sections of the same size within a building have similar material properties. Differences in material properties are more likely to occur because of differences in size groups, differences in specified material properties (36 kip/in.^{2} versus 50 kip/in.^{2}), and differences in section shapes. At a minimum, one coupon should be removed from each nominal size of each wide-flange, angle, channel, hollow structural section (HSS), and other structural shape used as part of the seismic-force-resisting system. Additional sampling should be done where large variations in member sizes occur within the building and where the building was constructed in phases or over extended time periods where members may have come from different mills or batches.

Material properties of structural steel vary much less than those of other construction materials. In fact, the expected yield and tensile stresses are usually considerably higher than the nominal specified values. As a result, testing for material properties of structural steel may not be required. The properties of wrought iron are more variable than those of steel. The strength of cast iron components cannot be determined from small sample tests, because component behavior is usually governed by inclusions and other imperfections.

If ductility and toughness are required at or near the weld, the design professional may conservatively assume that no ductility is available, in lieu of testing. In this case, the joint would have to be modified if inelastic demands are anticipated and the possibility of fractures cannot be tolerated. Special requirements for welded moment frames are given in FEMA 351 (2000b).

If a higher degree of confidence in results is desired, either the sample size shall be determined using ASTM E22 criteria or the prior knowledge of material grades from Section 9.2.2.5 should be used in conjunction with approved statistical procedures.

Design professionals may consider using Bayesian statistics and other statistical procedures contained in FEMA 274 (1997b) to gain greater confidence in the test results obtained from the sample sizes specified in this section.

9.2.2.4.1 Usual Testing The minimum number of tests to determine the yield and tensile strengths of steel materials for usual data collection shall be based on the following criteria:

1. If design drawings are incomplete or not available, at least one strength coupon from each steel component type shall be removed for testing, and one weld metal sample for each component type shall be obtained for testing. The sample shall consist of both local base and weld metal to determine composite strength of the connection.
2. If design drawings containing ASTM specification and material grade information are available, use of Table 9-1 to determine material properties shall be permitted without additional testing.
3. If design drawings containing material property information are available but the material properties are not listed in Table 9-1, use of nominal or specified material properties shall be permitted without additional testing.

9.2.2.4.2 Comprehensive Testing The minimum number of tests to determine the yield and tensile strengths of steel materials for comprehensive data collection shall be based on the following criteria:

1. If original construction documents defining material properties are inconclusive or do not exist but the date of construction is known and the material used is confirmed to be carbon steel, at least three strength coupons and three bolts and rivets shall be randomly removed from each component type.
2. If no knowledge of the structural system and materials used exists, at least two tensile strength coupons and two bolts and rivets shall be removed from each component type for every four floors or every 200,000 ft^2. If it is determined from testing that more than one material grade exists, additional sampling and testing shall be performed until the extent of each grade in component fabrication has been established.
3. In the absence of construction records defining welding filler metals and processes used, at least one weld metal sample for each component type shall be obtained for laboratory testing. The sample shall consist of both local base and weld metal to determine composite strength of the connection.
4. For archaic materials, at least three strength coupons shall be extracted for each component type for every four floors or 200,000 ft^2 of construction. If initial tests provide material properties that are consistent with properties given in Table 9-1, tests shall be required for every six floors or 300,000 ft^2 of construction only. If these tests provide material properties that are nonuniform, additional tests shall be performed until the extent of different materials is established.
5. For other material properties, a minimum of three tests shall be conducted.

The results of any material testing performed shall be compared to the default values in Tables 9-1 and 9-2 for the particular era of building construction. The amount of testing shall be doubled if the expected and lower-bound yield and tensile strengths determined from testing are lower than the default values.

9.2.2.5 Default Properties The default lower-bound material properties for steel components shall be as specified in Tables 9-1 and 9-2. Default expected strength material properties shall be determined by multiplying lower-bound values by an appropriate factor taken from Table 9-3.

Use of default material properties to determine component and connection strengths shall be permitted in conjunction with the linear analysis procedures of Chapter 7.

9.2.3 Condition Assessment

9.2.3.1 General A condition assessment of the existing building and site shall be performed as specified in this section. A condition assessment shall include the following:

1. The physical condition of primary and secondary components shall be examined and the presence of any degradation shall be noted;
2. Verification of the presence and configuration of structural elements and components and their connections, and the continuity of load paths among components, elements, and systems; and
3. Identification of other conditions, including the presence of nonstructural components that influence building performance.

C9.2.3.1 General The physical condition of existing components and elements and their connections must be examined for degradation. Degradation may include environmental effects (e.g., corrosion, fire damage, chemical attack) or past or current loading effects (e.g., overload, damage from past earthquakes, fatigue, fracture). The condition assessment should also examine for configurational problems observed in recent earthquakes, including effects of discontinuous components, improper welding, and poor fit-up.

Component orientation, plumbness, and physical dimensions should be confirmed during an assessment. Connections in steel components, elements, and systems require special consideration and evaluation. The load path for the system must be determined, and each connection in the load path(s) must be evaluated. This evaluation includes diaphragm-to-component and component-to-component connections. FEMA 351 (2000b) provides recommendations for inspection of welded steel moment frames.

The condition assessment also affords an opportunity to review other conditions that may influence steel elements and systems and overall building performance. Of particular importance is the identification of other elements and components that may contribute to or impair the performance of the steel system in question, including infills, neighboring buildings, and equipment attachments. Limitations posed by existing coverings, wall and ceiling space, infills, and other conditions shall also be defined such that prudent retrofit measures may be planned.

9.2.3.2 Scope and Procedures The condition assessment shall include visual inspection of accessible structural elements and components involved in seismic force resistance to verify information shown on available documents.

If coverings or other obstructions exist, either partial visual inspection through use of drilled holes and a fiberscope shall be used, or complete visual inspection shall be performed by local removal of covering materials. Where required by Section 6.2, visual or comprehensive condition assessments shall be performed in accordance with Sections 9.2.3.2.1 or 9.2.3.2.2, respectively.

C9.2.3.2 Scope and Procedures For steel elements encased in concrete, it may be more cost-effective to provide an entirely new seismic-force-resisting system than to undertake a visual inspection by removal of concrete encasement and repair.

Physical condition of components and connectors may also dictate the use of certain destructive and nondestructive test methods. If steel elements are covered by well bonded fireproofing materials or are encased in durable concrete, it is likely that their condition is suitable. However, local removal of these materials at connections should be performed as part of the assessment. The scope of this removal effort is dictated by the component and element design. For example, in a braced frame, exposure of several key connections may suffice if the physical condition is acceptable and the configuration matches the design drawings. However, for moment frames, it may be necessary to expose more connection points because of varying designs and the critical nature of the connections. See FEMA 351 (2000b) for inspection of welded moment frames.

9.2.3.2.1 Visual Condition Assessment If detailed design drawings exist, at least one connection of each connection type shall be exposed. If no deviations from the drawings exist, the sample shall be considered representative. If deviations from the existing drawings exist, then removal of additional coverings from connections of that type shall be done until the extent of deviations is determined.

9.2.3.2.2 Comprehensive Condition Assessment In the absence of construction drawings, at least three connections of each type shall be exposed for the primary structural components. If no deviations within a connection group are observed, the sample shall be considered representative. If deviations within a connection group are observed, then additional connections shall be exposed until the extent of deviations is determined.

9.2.3.3 Basis for the Mathematical Building Model The results of the condition assessment shall be used to create a mathematical building model.

If no damage, alteration, or degradation is observed in the condition assessment, component section properties shall be taken from design drawings. If some sectional material loss or deterioration has occurred, the loss shall be quantified by direct measurement and section properties shall be reduced accordingly using principles of structural mechanics.

9.2.4 Knowledge Factor A knowledge factor (κ) for computation of steel component capacities and permissible deformations shall be selected in accordance with Section 6.2.4, with the following additional requirements specific to steel components.

A knowledge factor of 0.75 shall be used if the components and their connectors are composed of cast or wrought iron.

9.3 GENERAL ASSUMPTIONS AND REQUIREMENTS

9.3.1 Stiffness Component stiffnesses shall be calculated in accordance with Sections 9.4 through 9.10.

9.3.2 Strength and Acceptance Criteria

9.3.2.1 General Classification of steel component actions as deformation or force controlled and calculation of strengths shall be as specified in Sections 9.4 through 9.10.

9.3.2.2 Deformation-Controlled Actions Strengths for deformation-controlled actions, Q_{CE}, shall be taken as expected strengths obtained experimentally or calculated using accepted principles of mechanics. Expected strength shall be defined as the mean maximum resistance expected over the range of deformations to which the component is likely to be subjected. Where calculations are used to determine mean expected strength, expected material properties including strain hardening shall be used. Unless other procedures are specified in this standard, procedures contained in AISC 360 to calculate design strength shall be permitted, except that the strength reduction factor, ϕ, shall be taken as 1.0. Deformation capacities for acceptance of deformation-controlled actions shall be as specified in Sections 9.4 through 9.10.

9.3.2.3 Force-Controlled Actions Strengths for force-controlled actions, Q_{CL}, shall be taken as lower-bound strengths obtained experimentally or calculated using established principles of mechanics. Lower-bound strength shall be defined as mean strength minus one standard deviation. Where calculations are used to determine lower-bound strength, lower-bound material

properties shall be used. Unless other procedures are specified in this standard, procedures contained in AISC 360 to calculate design strength shall be permitted, except that the strength reduction factor, ϕ, shall be taken as 1.0. Where alternative definitions of design strength are used, they shall be justified by experimental evidence.

9.3.2.4 Anchorage to Concrete Connections of steel components to concrete components shall comply with the provisions of this chapter and Chapter 10 for determination of strength and classification of actions as deformation controlled or force controlled.

The strength of connections between steel components and concrete components shall be the lowest value obtained for the limit states of the strength of the steel components, strength of the connection plates, and strength of the anchor bolts.

The strength of column baseplates shall be the lowest strength calculated based on the following limit states: expected strength of welds or bolts, expected bearing stress of the concrete, and expected yield strength of the baseplate.

The strength of the anchor bolt connection between the column baseplate and the concrete shall be the lowest strength calculated based on the following limit states: shear or tension yield strength of the anchor bolts, loss of bond between the anchor bolts and the concrete, or failure of the concrete. Anchor bolt strengths for each failure type or limit state shall be calculated in accordance with ACI 318, using $\phi = 1.0$, or other procedures approved by the authority having jurisdiction.

For column baseplate yielding, bolt yielding, and weld failure, the use of m-factors from Table 9-4, based on the respective limit states for partially restrained end plates, shall be permitted. Column base connection limit states controlled by anchor bolt failure modes governed by the concrete shall be considered force-controlled.

9.3.3 Retrofit Measures Seismic retrofit measures shall meet the requirements of this section and other provisions of this standard.

If replacement of the steel element is selected, the new element shall be designed in accordance with this standard and detailed and constructed in accordance with an approved building code.

9.4 STEEL MOMENT FRAMES

9.4.1 General The behavior of steel moment-resisting frames is generally dependent on the connection configuration and detailing. Table 9-5 identifies the various connection types for which acceptance criteria are provided. Modeling procedures, acceptance criteria, and retrofit measures for fully restrained (FR) moment frames and partially restrained (PR) moment frames shall be as defined in Sections 9.4.2 and 9.4.3, respectively.

C9.4.1 General Steel moment frames are those frames that develop their seismic resistance through bending of steel beams and columns, and moment-resisting beam–column connections. A moment-resisting beam-to-column connection is one that is designed to develop moment resistance at the joint between the beam and the column and also designed to develop the shear resistance at the panel zone of the column. Beams and columns consist of either hot-rolled steel sections or cold-formed steel sections or built-up members from hot-rolled or cold-formed plates and sections. Built-up members are assembled by riveting, bolting, or welding. The components are either bare steel or steel with a nonstructural coating for protection from fire or corrosion, or both, or steel with either concrete or masonry encasement.

After the 1994 Northridge earthquake, the SAC Joint Venture, a partnership of the Structural Engineers Association of California (SEAOC), the Applied Technology Council (ATC), and the Consortium of Universities for Research in Earthquake Engineering (CUREE), undertook a major program to address the issue of the seismic performance of moment-resisting steel frame structures. This program produced several documents that provide recommended criteria for the evaluation and upgrade of this building type. However, the design professional should be cautioned that there are some differences in the methodologies and specifics of this standard and the SAC procedures. Though both methodologies use similar analysis procedures, there are some variations in the factors used to compute the pseudo seismic forces in the linear static procedure (LSP) and the nonlinear static procedure (NSP). Where using the acceptance criteria of this section, the design professional should follow the procedures set forth in Chapter 7 of this standard without modification. The procedures in this standard and the SAC procedures are judged to result in comparable levels of drift demand.

Connections between the members shall be classified as fully restrained (FR) or partially restrained (PR), based on the strength and stiffness of the connection assembly. The connection types and definitions contained in Table 9-5, and the acceptance criteria for these connections, have been adopted from the referenced SAC documents, FEMA 350 (2000a), 351 (2000b), 355D (2000e), and 355F (2000f). The number of connections identified is based on research that has shown behavior to be highly dependent on connection detailing. The design professional should refer to those guidelines for more detailed descriptions of these connections, and a methodology for determining acceptance criteria for other connection types not included in this standard.

FEMA 351 (2000b) provides an alternate methodology for determining column demands that has not been adopted into this standard.

9.4.2 Fully Restrained (FR) Moment Frames

9.4.2.1 General FR moment frames shall be those moment frames with connections identified as FR in Table 9-5.

Moment frames with connections not included in Table 9-5 shall be defined as FR if the joint deformations (not including panel zone deformation) do not contribute more than 10% to the total lateral deflection of the frame and the connection is at least as strong as the weaker of the two members being joined. If either of these conditions is not satisfied, the frame shall be characterized as PR.

Design provisions for FR moment frames specified in AISC 341 or ASCE 7 shall apply unless superseded by the provisions in this standard.

C9.4.2.1 General FEMA 351 (2000b) identifies two types of connections—Type 1 (ductile) and Type 2 (brittle). These definitions are not used in this standard because the distinction is reflected in the acceptance criteria for the connections.

The most common beam-to-column connection used in steel FR moment frames since the late 1950s required the beam flange to be welded to the column flange using complete joint penetration groove welds. Many of these connections have fractured during recent earthquakes. The design professional is referred to FEMA 274 (1997b) and FEMA 351 (2000b).

9.4.2.2 Stiffness of FR Moment Frames

9.4.2.2.1 Linear Static and Dynamic Procedures The stiffness of steel members (columns and beams) and connections (joints and panel zones used with the linear procedures of Chapter 7)

Table 9-4. Acceptance Criteria for Linear Procedures—Structural Steel Components

Component/Action	*m*-Factors for Linear Procedures[w]				
		Primary		Secondary	
	IO	LS	CP	LS	CP
Beams—Flexure					
a. $\frac{b_f}{2t_f} \le \frac{52}{\sqrt{F_{ye}}}$ and $\frac{h}{t_w} \le \frac{418}{\sqrt{F_{ye}}}$	2	6	8	10	12
b. $\frac{b_f}{2t_f} \ge \frac{65}{\sqrt{F_{ye}}}$ or $\frac{h}{t_w} \ge \frac{640}{\sqrt{F_{ye}}}$	1.25	2	3	3	4
c. Other	Linear interpolation between the values on lines a and b for both flange slenderness (first term) and web slenderness (second term) shall be performed, and the lowest resulting value shall be used.				
Columns—Flexure[a,b]					
For $P/P_{CL} < 0.2$					
a $\frac{b_f}{2t_f} \le \frac{52}{\sqrt{F_{ye}}}$ and $\frac{h}{t_w} \le \frac{300}{\sqrt{F_{ye}}}$	2	6	8	10	12
b. $\frac{b_f}{2t_f} \ge \frac{65}{\sqrt{F_{ye}}}$ or $\frac{h}{t_w} \ge \frac{460}{\sqrt{F_{ye}}}$	1.25	1.25	2	2	3
c. Other	Linear interpolation between the values on lines a and b for both flange slenderness (first term) and web slenderness (second term) shall be performed, and the lowest resulting value shall be used.				
For $0.2 \le P/P_{CL} \le 0.5$					
a. $\frac{b_f}{2t_f} \le \frac{52}{\sqrt{F_{ye}}}$ and $\frac{h}{t_w} \le \frac{260}{\sqrt{F_{ye}}}$	1.25	—[c]	—[d]	—[e]	—[f]
b. $\frac{b_f}{2t_f} \ge \frac{65}{\sqrt{F_{ye}}}$ or $\frac{h}{t_w} \ge \frac{400}{\sqrt{F_{ye}}}$	1.25	1.25	1.5	2	2
c. Other	Linear interpolation between the values on lines a and b for both flange slenderness (first term) and web slenderness (second term) shall be performed, and the lowest resulting value shall be used.				
Column panel zones—Shear	1.5	8	11	12	12
Fully Restrained Moment Connections[g]					
Welded unreinforced flange (WUF)[g]	1.0	4.3–0.083*d*	3.9–0.043*d*	4.3–0.048*d*	5.5–0.064*d*
Bottom haunch in WUF with slab	2.3	2.7	3.4	3.8	4.7
Bottom haunch in WUF without slab	1.8	2.1	2.5	2.8	3.3
Welded cover plate in WUF[h]	3.9–0.059*d*	4.3–0.067*d*	5.4–0.090*d*	5.4–0.090*d*	6.9–0.118*d*
Improved WUF—Bolted web[h]	2.0–0.016*d*	2.3–0.021*d*	3.1–0.032*d*	4.9–0.048*d*	6.2–0.065*d*
Improved WUF—Welded web	3.1	4.2	5.3	5.3	6.7
Free flange[h]	4.5–0.065*d*	6.3–0.098*d*	8.1–0.129*d*	8.4–0.129*d*	11.0–0.172*d*
Reduced beam section[h]	3.5–0.016*d*	4.9–0.025*d*	6.2–0.032*d*	6.5–0.025*d*	8.4–0.032*d*
Welded Flange Plates					
a. Flange plate net section	2.5	3.3	4.1	5.7	7.3
b. Other limit states	Force-controlled				
Welded bottom haunch	2.3	3.1	3.8	4.6	5.9
Welded top and bottom haunch	2.4	3.1	3.9	4.7	6.0
Welded cover—Plated flanges	2.5	2.8	3.4	3.4	4.2
Partially Restrained Moment Connections					
Top and Bottom Clip Angle[i]					
a. Shear failure of rivet or bolt (limit state 1)[j]	1.5	4	6	6	8
b. Tension failure of horizontal leg of angle (limit state 2)	1.25	1.5	2	1.5	2
c. Tension failure of rivet or bolt (limit state 3)[j]	1.25	1.5	2.5	4	4
d. Flexural failure of angle (limit state 4)	2	5	7	7	14
Double Split Tee[i]					
a. Shear failure of rivet or bolt (limit state 1)[j]	1.5	4	6	6	8
b. Tension failure of rivet or bolt (limit state 2)[j]	1.25	1.5	2.5	4	4
c. Tension failure of split tee stem (limit state 3)	1.25	1.5	2	1.5	2
d. Flexural failure of split tee (limit state 4)	2	5	7	7	14
Bolted Flange Plate[i]					
a. Failure in net section of flange plate or shear failure of bolts or rivets[j]	1.5	4	5	4	5
b. Weld failure or tension failure on gross section of plate	1.25	1.5	2	1.5	2
Bolted End Plate					
a. Yield of end plate	2	5.5	7	7	7
b. Yield of bolts	1.5	2	3	4	4
c. Failure of weld	1.25	1.5	2	3	3

Continued

Table 9-4. *(Continued)*

Component/Action	*m*-Factors for Linear Procedures[w]				
		Primary		Secondary	
	IO	LS	CP	LS	CP
Composite Top and Clip Angle Bottom[i]					
a. Failure of deck reinforcement	1.25	2	3	4	6
b. Local flange yielding and web crippling of column	1.5	4	6	5	7
c. Yield of bottom flange angle	1.5	4	6	6	7
d. Tensile yield of rivets or bolts at column flange	1.25	1.5	2.5	2.5	3.5
e. Shear yield of beam flange connections	1.25	2.5	3.5	3.5	4.5
Shear connection with slab[h]	$2.4–0.011d_{bg}$	—	—	$13.0–0.290d_{bg}$	$17.0–0.387d_{bg}$
Shear connection without slab[h]	$8.9–0.193d_{bg}$	—	—	$13.0–0.290d_{bg}$	$17.0–0.387d_{bg}$
Eccentrically Braced Frame (EBF) Link Beam[k,l]					
a. $e \le \frac{1.6\,M_{CE}}{V_{CE}}$	1.5	9	13	13	15
b. $e \ge \frac{2.6\,M_{CE}}{V_{CE}}$	Same as for beams				
c. $\frac{1.6\,M_{CE}}{V_{CE}} < e < \frac{2.6\,M_{CE}}{V_{CE}}$	Linear interpolation shall be used				
Braces in Compression (except EBF braces)					
a. Slender[m] $\frac{Kl}{r} \ge 4.2\sqrt{E/F_y}$					
1. *W*, *I*, 2*L* in-plane[n], 2*C* in-plane[n]	1.25	6	8	7	9
2. 2*L* out-of-plane[n], 2*C* out-of-plane[n]	1.25	5	7	6	8
3. HSS, pipes, tubes, *L*	1.25	5	7	6	8
b. Stocky[m,o] $\frac{Kl}{r} \le 2.1\sqrt{E/F_y}$					
1. *W*, *I*, 2*L* in-plane[n], 2*C* in-plane[n]	1.25	5	7	6	8
2. 2*L* out-of-plane[n], 2*C* out-of-plane[n]	1.25	4	6	5	7
3. HSS, pipes, tubes	1.25	4	6	5	7
c. Intermediate	Linear interpolation between the values for slender and stocky braces (after application of all applicable modifiers) shall be used.				
Braces in Tension (except EBF braces)[p]	1.25	5[q,r]	7[q,r]	8[s,r]	10[s,r]
Buckling-Restrained Braces[t,u]	2.3	5.6	7.5	7.5	10
Beams, Columns in Tension (except EBF Beams, Columns)	1.25	3	5	6	7
Steel Plate Shear Walls[v]	1.5	8	12	12	14
Diaphragm Components					
Diaphragm shear yielding or panel or plate buckling	1.25	2	3	2	3
Diaphragm chords and collectors—Full lateral support	1.25	6	8	6	8
Diaphragm chords and collectors—Limited lateral support	1.25	2	3	2	3

[a]Columns in moment or braced frames shall be permitted to be designed for the maximum force delivered by connecting members. For rectangular or square columns, replace $b_f/2t_f$ with b/t, replace 52 with 110, and replace 65 with 190.
[b]Columns with $P/P_{CL} > 0.5$ shall be considered force controlled.
[c]$m = 9(1 - 5/3\ P/P_{CL})$ in the plane of bending.
[d]$m = 12(1 - 5/3\ P/P_{CL})$ in the plane of bending.
[e]$m = 15(1 - 5/3\ P/P_{CL})$ in the plane of bending.
[f]$m = 18(1 - 5/3\ P/P_{CL})$ in the plane of bending.
[g]Tabulated values shall be modified as indicated in Section 9.4.2.4.2, Item 4.
[h]d is the beam depth; d_{bg} is the depth of the bolt group.
[i]Web plate or stiffened seat shall be considered to carry shear. Without shear connection, action shall not be classified as secondary. If $d_b > 18$ in., multiply *m*-factors by $18/d_b$, but values need not be less than 1.0.
[j]For high-strength bolts, divide values by 2.0, but values need not be less than 1.25.
[k]Values are for link beams with three or more web stiffeners. If no stiffeners, divide values by 2.0, but values need not be less than 1.25. Linear interpolation shall be used for one or two stiffeners.
[l]Assumes ductile detailing for flexural link, in accordance with AISC *341*.
[m]In addition to consideration of connection capacity in accordance with Section 9.5.2.4.1, values for braces shall be modified for connection robustness as follows: Where brace connections do not satisfy the requirements of AISC 341, F2.6, the acceptance criteria shall be multiplied by 0.8.
[n]Stitches for built-up members: Where the stitches for built-up braces do not satisfy the requirements of AISC 341, F2.5b, the acceptance criteria shall be multiplied by 0.5.
[o]Section compactness: Acceptance criteria applies to brace sections that are concrete-filled or seismically compact according to Table D1.1 of AISC 341 for highly ductile members. Where the brace section is noncompact according to Table B4.1 of AISC 360, the acceptance criteria shall be multiplied by 0.5. For intermediate compactness conditions, the acceptance criteria shall be multiplied by a value determined by linear interpolation between the seismically compact and the noncompact cases.
[p]For tension-only bracing, *m*-factors shall be divided by 2.0, but need not be less than 1.25.
[q]For 2*L*, HSS, pipe, and single angle, *m*-factors shall be multiplied by 0.8.
[r]In addition to consideration of connection capacity in accordance with Section 9.5.2.4.1, values for braces shall be modified for connection robustness as follows: Where brace connections do not satisfy the requirements of AISC 341, Section F2.6, the acceptance criteria shall be multiplied by 0.8.
[s]For 2*L*, HSS, pipe, and single angle, *m*-factors shall be multiplied by 0.7.
[t]Maximum strain of the buckling-restrained brace (BRB) core shall not exceed 2.5%.
[u]If testing to demonstrate compliance with Section 9.5.4.4.2 is not available, the acceptance criteria shall be multiplied by 0.7.
[v]Applicable if stiffeners, or concrete backing, is provided to prevent buckling.
[w]Regardless of the modifiers applied, *m* need never be taken less than 1.0.

Table 9-5. Steel Moment Frame Connection Types

Connection	Description[a,b]	Type
Welded unreinforced flange (WUF)	Full-penetration welds between beam and columns, flanges, bolted or welded web, designed before code changes that followed the Northridge earthquake	FR
Bottom haunch in WUF with slab	Welded bottom haunch added to existing WUF connection with composite slab[c]	FR
Bottom haunch in WUF without slab	Welded bottom haunch added to existing WUF connection without composite slab[c]	FR
Welded cover plate in WUF	Welded cover plates added to existing WUF connection[c]	FR
Improved WUF—Bolted web	Full-penetration welds between beam and column flanges, bolted web[d]	FR
Improved WUF—Welded web	Full-penetration welds between beam and column flanges, welded web[d]	FR
Free flange	Web is coped at ends of beam to separate flanges, welded web tab resists shear and bending moment because of eccentricity caused by coped web[d]	FR
Welded flange plates	Flange plate with full-penetration weld at column and fillet welded to beam flange[d]	FR
Reduced beam section	Connection in which net area of beam flange is reduced to force plastic hinging away from column face[d]	FR
Welded bottom haunch	Haunched connection at bottom flange only[d]	FR
Welded top and bottom haunches	Haunched connection at top and bottom flanges[d]	FR
Welded cover—Plated flanges	Beam flange and cover plate are welded to column flange[d]	FR
Top and bottom clip angles	Clip angle bolted or riveted to beam flange and column flange	PR
Double split Tee	Split Tees bolted or riveted to beam flange and column flange	PR
Composite top and clip angle bottom	Clip angle bolted or riveted to column flange and beam bottom flange with composite slab	PR
Bolted flange plates	Flange plate with full-penetration weld at column and bolted to beam flange[d]	PR[e]
Bolted end plate	Stiffened or unstiffened end plate welded to beam and bolted to column flange	PR[e]
Shear connection with slab	Simple connection with shear tab, composite slab	PR
Shear connection without slab	Simple connection with shear tab, no composite slab	PR

[a]Where not indicated otherwise, definition applies to connections with bolted or welded web.
[b]Where not indicated otherwise, definition applies to connections with or without composite slab.
[c]Full-penetration welds between haunch or cover plate to column flange conform to the requirements of AISC 341.
[d]Full-penetration welds conform to the requirements of AISC 341.
[e]For purposes of modeling, the connection may be considered FR if it meets the strength and stiffness requirements of Section 9.4.2.1.

shall be based on principles of structural mechanics and as specified in the AISC 360 unless superseded by provisions of this section.

1. **Axial Area and Shear Area.** For components fully encased in concrete, calculation of the stiffness using full composite action shall be permitted if confining reinforcement is provided to allow the concrete to remain in place during an earthquake. Concrete confined on at least three sides, or over 75% of its perimeter, by elements of the structural steel member shall be permitted to be considered adequately confined to provide composite action.
2. **Moment of Inertia.** For components fully encased in concrete, calculation of the stiffness using full composite action shall be permitted, but the width of the composite section shall be taken as equal to the width of the flanges of the steel member and shall not include parts of the adjoining concrete floor slab, unless an identifiable shear transfer mechanism between the concrete slab and the steel flange is shown to meet the applicable acceptance criteria for the selected Performance Level.
3. **Panel Zone Modeling.** Inclusion of panel zone flexibility shall be permitted in a frame analysis by adding a panel zone element to the mathematical model. Alternatively, adjustment of the beam flexural stiffness to account for panel zone flexibility shall be permitted. Where the expected shear strength of a panel zone exceeds the flexural strength of the beams at a beam-to-column connection, and the stiffness of the panel zone (converted to a rotational spring) is at least 10 times larger than the flexural stiffness of the beam, direct modeling of the panel zone shall not be required. In such cases, rigid offsets from the center of the column shall be permitted to represent the effective span of the beam. Otherwise, use of partially rigid offsets or centerline analysis shall be permitted for other cases.
4. **Joint Modeling.** Modeling of connection stiffness for FR moment frames shall not be required except for joints that are intentionally reinforced to force formation of plastic hinges within the beam span, remote from the column face. For such joints, rigid elements shall be used between the column and the beam to represent the effective span of the beam.
5. **Connections.** Requirements of this section shall apply to connections identified as FR in Table 9-5 and those meeting the requirements of Section 9.4.2.1.

9.4.2.2.2 Nonlinear Static Procedure If the nonlinear static procedure (NSP) of Chapter 7 is used, the following criteria shall apply:

1. Elastic component properties shall be modeled as specified in Section 9.4.2.2.1. Flexural stiffness, EI_c, of beam–columns with $P > 0.5P_y$ shall be modified by τ_b in AISC 360, Chap. C;
2. Plastification shall be represented by nonlinear moment-curvature and interaction relationships for beams and beam–columns derived from experiment or analysis; and
3. Nonlinear behavior of panel zones shall be included in the mathematical model except where analysis indicates that the panel zone remains elastic. In such cases, it is permitted to model panel zones as indicated in Section 9.4.2.2.1, Item 3.

In lieu of relationships derived from experiment or analysis, the generalized load-deformation curve shown in Fig. 9-1, with parameters *a*, *b*, and *c* as defined in Tables 9-6 and 9-7, shall be used for components of FR moment frames. Modification of this curve shall be permitted to account for strain hardening of components as follows: (1) a strain-hardening slope of 3% of the elastic slope shall be permitted for beams and columns unless a greater strain-hardening slope is justified by test data; and

Table 9-6. Modeling Parameters and Acceptance Criteria for Nonlinear Procedures—Structural Steel Components

Component or Action	Modeling Parameters: Plastic Rotation Angle, Radians *a*	Modeling Parameters: Plastic Rotation Angle, Radians *b*	Modeling Parameters: Residual Strength Ratio *c*	Acceptance Criteria: Plastic Rotation Angle, Radians IO	Acceptance Criteria: Plastic Rotation Angle, Radians LS	Acceptance Criteria: Plastic Rotation Angle, Radians CP
Beams—Flexure						
a. $\frac{b_f}{2t_f} \le \frac{52}{\sqrt{F_{ye}}}$ and $\frac{h}{t_w} \le \frac{418}{\sqrt{F_{ye}}}$	$9\theta_y$	$11\theta_y$	0.6	$1\theta_y$	$9\theta_y$	$11\theta_y$
b. $\frac{b_f}{2t_f} \ge \frac{65}{\sqrt{F_{ye}}}$ or $\frac{h}{t_w} \ge \frac{640}{\sqrt{F_{ye}}}$	$4\theta_y$	$6\theta_y$	0.2	$0.25\theta_y$	$3\theta_y$	$4\theta_y$
c. Other	Linear interpolation between the values on lines a and b for both flange slenderness (first term) and web slenderness (second term) shall be performed, and the lower resulting value shall be used					
Columns—Flexure[a,b]						
For $P/P_{CL} < 0.2$						
a. $\frac{b_f}{2t_f} \le \frac{52}{\sqrt{F_{ye}}}$ and $\frac{h}{t_w} \le \frac{300}{\sqrt{F_{ye}}}$	$9\theta_y$	$11\theta_y$	0.6	$1\theta_y$	$9\theta_y$	$11\theta_y$
b. $\frac{b_f}{2t_f} \ge \frac{65}{\sqrt{F_{ye}}}$ or $\frac{h}{t_w} \ge \frac{460}{\sqrt{F_{ye}}}$	$4\theta_y$	$6\theta_y$	0.2	$0.25\theta_y$	$3\theta_y$	$4\theta_y$
c. Other	Linear interpolation between the values on lines a and b for both flange slenderness (first term) and web slenderness (second term) shall be performed, and the lower resulting value shall be used					
For $0.2 \le P/P_{CL} \le 0.5$						
a. $\frac{b_f}{2t_f} \le \frac{52}{\sqrt{F_{ye}}}$ and $\frac{h}{t_w} \le \frac{260}{\sqrt{F_{ye}}}$	—[c]	—[d]	0.2	$0.25\theta_y$	—[e]	—[d]
b. $\frac{b_f}{2t_f} \ge \frac{65}{\sqrt{F_{ye}}}$ or $\frac{h}{t_w} \ge \frac{400}{\sqrt{F_{ye}}}$	$1\theta_y$	$1.5\theta_y$	0.2	$0.25\theta_y$	$1.2\theta_y$	$1.2\theta_y$
c. Other	Linear interpolation between the values on lines a and b for both flange slenderness (first term) and web slenderness (second term) shall be performed, and the lower resulting value shall be used					
Column Panel Zones	$12\theta_y$	$12\theta_y$	1.0	$1\theta_y$	$12\theta_y$	$12\theta_y$
Fully Restrained Moment Connections[f]						
WUF[g]	0.051–0.0013*d*	0.043–0.00060*d*	0.2	0.026–0.00065*d*	0.0323–0.00045*d*	0.043–0.00060*d*
Bottom haunch in WUF with slab	0.026	0.036	0.2	0.013	0.0270	0.036
Bottom haunch in WUF without slab	0.018	0.023	0.2	0.009	0.0180	0.023
Welded cover plate in WUF[g]	0.056–0.0011*d*	0.056–0.0011*d*	0.2	0.028–0.00055*d*	0.0420–0.00083*d*	0.056–0.0011*d*
Improved WUF—Bolted web[g]	0.021–0.00030*d*	0.050–0.00060*d*	0.2	0.010–0.00015*d*	0.0375–0.00045*d*	0.050–0.00060*d*
Improved WUF—Welded web	0.041	0.054	0.2	0.020	0.0410	0.054
Free flange[g]	0.067–0.0012*d*	0.094–0.0016*d*	0.2	0.034–0.00060*d*	0.0705–0.0012*d*	0.094–0.0016*d*
Reduced beam section[g]	0.050–0.00030*d*	0.070–0.00030*d*	0.2	0.025–0.00015*d*	0.0525–0.00023*d*	0.07–0.00030*d*
Welded flange plates						
a. Flange plate net section	0.03	0.06	0.2	0.015	0.0450	0.06
b. Other limit states	Force controlled					
Welded bottom haunch	0.027	0.047	0.2	0.014	0.0353	0.047
Welded top and bottom haunches	0.028	0.048	0.2	0.014	0.0360	0.048
Welded cover—plated flanges	0.031	0.031	0.2	0.016	0.0233	0.031
Partially Restrained Moment Connections						
Top and bottom clip angle[h]						
a. Shear failure of rivet or bolt (Limit State 1)[i]	0.036	0.048	0.200	0.008	0.030	0.040
b. Tension failure of horizontal leg of angle (Limit State 2)	0.012	0.018	0.800	0.003	0.010	0.015
c. Tension failure of rivet or bolt (Limit State 3)[i]	0.016	0.025	1.000	0.005	0.020	0.020
d. Flexural failure of angle (Limit State 4)	0.042	0.084	0.200	0.010	0.035	0.070
Double Split Tee[h]						
a. Shear failure of rivet or bolt (Limit State 1)[i]	0.036	0.048	0.200	0.008	0.030	0.040
b. Tension failure of rivet or bolt (Limit State 2)[i]	0.016	0.024	0.800	0.005	0.020	0.020
c. Tension failure of split Tee stem (Limit State 3)	0.012	0.018	0.800	0.003	0.010	0.015
d. Flexural failure of split Tee (Limit State 4)	0.042	0.084	0.200	0.010	0.035	0.070
Bolted Flange Plate[h]						
a. Failure in net section of flange plate or shear failure of bolts or rivets[i]	0.030	0.030	0.800	0.008	0.020	0.025

Table 9-6. *(Continued)*

Component or Action	Modeling Parameters: Plastic Rotation Angle, Radians *a*	Modeling Parameters: Plastic Rotation Angle, Radians *b*	Modeling Parameters: Residual Strength Ratio *c*	Acceptance Criteria: Plastic Rotation Angle, Radians IO	Acceptance Criteria: Plastic Rotation Angle, Radians LS	Acceptance Criteria: Plastic Rotation Angle, Radians CP
b. Weld failure or tension failure on gross section of plate	0.012	0.018	0.800	0.003	0.010	0.015
Bolted End Plate						
a. Yield of end plate	0.042	0.042	0.800	0.010	0.035	0.035
b. Yield of bolts	0.018	0.024	0.800	0.008	0.020	0.020
c. Failure of weld	0.012	0.018	0.800	0.003	0.015	0.015
Composite Top Clip Angle Bottom[h]						
a. Failure of deck reinforcement	0.018	0.035	0.800	0.005	0.020	0.030
b. Local flange yielding and web crippling of column	0.036	0.042	0.400	0.008	0.025	0.035
c. Yield of bottom flange angle	0.036	0.042	0.200	0.008	0.025	0.035
d. Tensile yield of rivets or bolts at column flange	0.015	0.022	0.800	0.005	0.013	0.018
e. Shear yield of beam–flange connection	0.022	0.027	0.200	0.005	0.018	0.023
Shear connection with slab[g]	0.029–0.00020d_{bg}	0.15–0.0036d_{bg}	0.400	0.014–0.00010d_{bg}	0.1125–0.0027d_{bg}	0.15–0.0036d_{bg}
Shear connection without slab[g]	0.15–0.0036d_{bg}	0.15–0.0036d_{bg}	0.400	0.075–0.0018d_{bg}	0.1125–0.0027d_{bg}	0.15–0.0036d_{bg}
EBF Link Beam[j,k]						
a. $e \le \frac{1.6\,M_{CE}}{V_{CE}}$	0.15	0.17	0.8	0.005	0.14	0.16
b. $e \ge \frac{2.6\,M_{CE}}{V_{CE}}$	Same as for beams					
c. $\frac{1.6\,M_{CE}}{V_{CE}} < e < \frac{2.6\,M_{CE}}{V_{CE}}$	Linear interpolation shall be used					
Steel Plate Shear Walls[l]	14θ_y	16θ_y	0.7	0.5θ_y	13θ_y	15θ_y

[a]Columns in moment or braced frames shall be permitted to be designed for the maximum force delivered by connecting members. For rectangular or square columns, replace $b_f/2t_f$ with b/t, replace 52 with 110, and replace 65 with 190.
[b]Columns with $P/P_{CL} > 0.5$ shall be considered force controlled.
[c]Plastic rotation = $11(1 - 5/3\ P/P_{CL})\ \theta_y$ in the plane of bending.
[d]Plastic rotation = $17(1 - 5/3\ P/P_{CL})\ \theta_y$ in the plane of bending.
[e]Plastic rotation = $14(1 - 5/3\ P/P_{CL})\ \theta_y$ in the plane of bending.
[f]Acceptance criteria are provided at the column face. Tabulated values shall be modified as indicated in Section 9.4.2.4.3, Item 4.
[g]d is the beam depth; d_{bg} is the depth of the bolt group. Where plastic rotations are a function of d or d_{bg}, they need not be taken as less than 0.0.
[h]Web plate or stiffened seat shall be considered to carry shear. Without shear connection, action shall not be classified as secondary. If beam depth, $d_b > 18$ in., multiply m-factors by $18/d_b$.
[i]For high-strength bolts, divide values by 2.0.
[j]Deformation is the rotation angle between link and beam outside link or column.
[k]Values are for link beams with three or more web stiffeners. If no stiffeners, divide values by 2.0. Linear interpolation shall be used for one or two stiffeners.
[l]Values are for shear walls with stiffeners to prevent shear buckling.

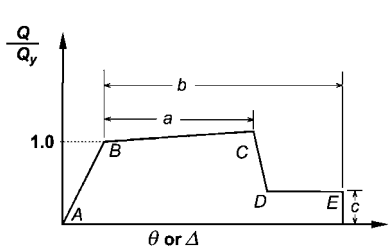

FIG. 9-1. Generalized Force–Deformation Relation for Steel Elements or Components

(2) where panel zone yielding occurs, a strain-hardening slope of 6% shall be used for the panel zone unless a greater strain-hardening slope is justified by test data.

The parameters Q and Q_y in Fig. 9-1 are generalized component load and generalized component expected strength, respectively. For beams and columns, θ is the total elastic and plastic rotation of the beam or column, θ_y is the rotation at yield, Δ is total elastic and plastic displacement, and Δ_y is yield displacement. For panel zones, θ_y is the angular shear deformation in radians. Fig. 9-2 defines chord rotation for beams. The chord rotation shall be calculated either by adding the yield rotation, θ_y, to the plastic rotation, or it can be taken to be equal to the story drift. Use of Eqs. 9-1 and 9-2 shall be permitted to calculate the yield rotation, θ_y, where the point of contraflexure is anticipated to occur at the midlength of the beam or column, respectively.

$$\text{Beams:} \quad \theta_y = \frac{ZF_{ye}l_b}{6EI_b} \tag{9-1}$$

$$\text{Columns:} \quad \theta_y = \frac{ZF_{ye}l_c}{6EI_c}\left(1 - \frac{P}{P_{ye}}\right) \tag{9-2}$$

Q_{CE} is the component expected strength. For flexural actions of beams and columns, Q_{CE} refers to the plastic moment capacity, which shall be calculated using Eqs. (9-3) and (9-4):

$$\text{Beams:} \quad Q_{CE} = M_{CE} = ZF_{ye} \tag{9-3}$$

Table 9-7. Modeling Parameters and Acceptance Criteria for Nonlinear Procedures—Structural Steel Components—Axial Actions

Component/Action	Modeling Parameters: Plastic Deformation *a*	Modeling Parameters: Plastic Deformation *b*	Modeling Parameters: Residual Strength Ratio *c*	Acceptance Criteria: Plastic Deformation IO	Acceptance Criteria: Plastic Deformation LS	Acceptance Criteria: Plastic Deformation CP
Braces in Compression (except EBF braces)[a,b]						
a. Slender $\frac{Kl}{r} \geq 4.2\sqrt{E/F_y}$						
1. *W*, *I*, 2*L* in-plane[c], 2*C* in-plane[c]	$0.5\Delta_c$	$10\Delta_c$	0.3	$0.5\Delta_c$	$8\Delta_c$	$10\Delta_c$
2. 2*L* out-of-plane[c], 2*C* out-of-plane[c]	$0.5\Delta_c$	$9\Delta_c$	0.3	$0.5\Delta_c$	$7\Delta_c$	$9\Delta_c$
3. HSS, pipes, tubes	$0.5\Delta_c$	$9\Delta_c$	0.3	$0.5\Delta_c$	$7\Delta_c$	$9\Delta_c$
4. Single angle	$0.5\Delta_c$	$12\Delta_c$	0.3	$0.5\Delta_c$	$9\Delta_c$	$12\Delta_c$
b. Stocky[d] $\frac{Kl}{r} \leq 2.1\sqrt{E/F_y}$						
1. *W*, *I*, 2*L* in-plane[c], 2*C* in-plane[c]	$1\Delta_c$	$8\Delta_c$	0.5	$0.5\Delta_c$	$7\Delta_c$	$8\Delta_c$
2. 2*L* out-of-plane[c], 2*C* out-of-plane[c]	$1\Delta_c$	$7\Delta_c$	0.5	$0.5\Delta_c$	$6\Delta_c$	$7\Delta_c$
3. HSS, pipes, tubes	$1\Delta_c$	$7\Delta_c$	0.5	$0.5\Delta_c$	$6\Delta_c$	$7\Delta_c$
c. Intermediate	Linear interpolation between the values for slender and stocky braces (after application of all applicable modifiers) shall be used.					
Braces in Tension (except EBF braces)[e,f,g]						
1. *W*	$10\Delta_T$	$13\Delta_T$	0.6	$0.5\Delta_T$	$10\Delta_T$	$13\Delta_T$
2. 2*L*	$9\Delta_T$	$12\Delta_T$	0.6	$0.5\Delta_T$	$9\Delta_T$	$12\Delta_T$
3. HSS	$9\Delta_T$	$11\Delta_T$	0.6	$0.5\Delta_T$	$8\Delta_T$	$11\Delta_T$
4. Pipe	$8\Delta_T$	$9\Delta_T$	0.6	$0.5\Delta_T$	$7\Delta_T$	$9\Delta_T$
5. Single angle	$10\Delta_T$	$11\Delta_T$	0.6	$0.5\Delta_T$	$8\Delta_T$	$10\Delta_T$
Beams, columns in tension (except EBF beams, columns)[e]	$5\Delta_T$	$7\Delta_T$	1.0	$0.5\Delta_T$	$6\Delta_T$	$7\Delta_T$
Buckling-restrained braces[h,i,j]	$13.3\Delta_y$	$13.3\Delta_y$	1.0	$3.0\Delta_y$	$10\Delta_y$	$13.3\Delta_y$

[a] Δ_c is the axial deformation at expected buckling load.
[b] In addition to consideration of connection capacity in accordance with Section 9.5.2.4.1, values for braces shall be modified for connection robustness as follows: Where brace connections do not satisfy the requirements of AISC 341, Section F2.6, the acceptance criteria shall be multiplied by 0.8, unless the connections and their behavior have been explicitly included in the model.
[c] Stitches for built-up members: Where the stitches for built-up braces do not satisfy the requirements of AISC 341, Section F2.5b, the values of *a*, *b*, and all acceptance criteria shall be multiplied by 0.5.
[d] Section compactness: Modeling parameters and acceptance criteria apply to brace sections that are concrete-filled or seismically compact according to Table D1.1 of AISC 341. Where the brace section is noncompact according to Table B4.1 of AISC 360, the acceptance criteria shall be multiplied by 0.5. For intermediate compactness conditions, the acceptance criteria shall be multiplied by a value determined by linear interpolation between the seismically compact and the noncompact cases.
[e] Δ_T is the axial deformation at expected tensile yielding load.
[f] For tension-only bracing, acceptance criteria shall be divided by 2.0. For rod bracing, the modeling parameters and acceptance criteria specified for pipe in tension shall be used, and then acceptance criteria shall be divided by 2.0.
[g] In addition to consideration for connection capacity in accordance with Section 9.5.2.4.1, values for braces shall be modified for connection robustness as follows: Where brace connections do not satisfy the requirements of AISC 341, Section F2.6, the acceptance criteria shall be multiplied by 0.8 except for IO, unless the connections and their behavior have been explicitly included in the model.
[h] Δ_y is the axial deformation at the expected brace capacity per Section 9.5.4.2.2
[i] Maximum strain of the BRB core shall not exceed 2.5%.
[j] If testing to demonstrate compliance with Section 9.5.4.4.3 is not available, the acceptance criteria and modeling parameters shall be multiplied by 0.7.

$$\text{Columns:} \quad Q_{CE} = M_{CE} = 1.18ZF_{ye}\left(1 - \frac{P}{P_{ye}}\right) \leq ZF_{ye} \qquad (9\text{-}4)$$

For panel zones, Q_{CE} refers to the plastic shear capacity of the panel zone, which shall be calculated using Eq. (9-5):

$$\text{Panel Zones:} \quad Q_{CE} = V_{CE} = 0.55F_{ye}d_c t_p \qquad (9\text{-}5)$$

where d_c = column depth;
E = modulus of elasticity;
F_{ye} = expected yield strength of the material;
I = moment of inertia;
l_b = beam length;
l_c = column length;
M_{CE} = expected flexural strength;
P = axial force in the member at the target displacement for nonlinear static analyses, or at the instant of computation for nonlinear dynamic analyses. For linear analyses, P shall be taken as Q_{UF}, calculated in accordance with Section 7.5.2.1.2;
P_{ye} = expected axial yield force of the member = $A_g F_{ye}$;
t_p = total thickness of panel zone, including doubler plates;
θ = chord rotation;
θ_y = yield rotation;
V_{CE} = expected shear strength; and
Z = plastic section modulus.

C9.4.2.2.2 Nonlinear Static Procedure Strain hardening should be considered for all components. FEMA 355D (2000e) is a useful reference for information concerning nonlinear behavior of various tested connection configurations.

9.4.2.2.3 Nonlinear Dynamic Procedure The complete hysteretic behavior of each component shall be determined experimen-

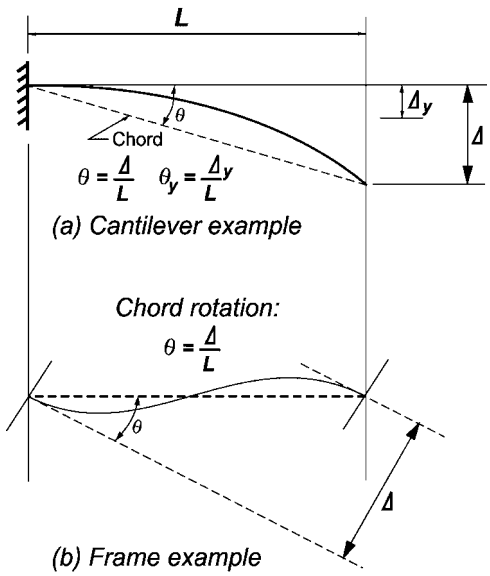

FIG. 9-2. Definition of Chord Rotation

tally or by other procedures approved by the authority having jurisdiction.

C9.4.2.2.3 Nonlinear Dynamic Procedure FEMA 355D (2000e) is a useful reference for information concerning nonlinear behavior of various tested connection configurations.

9.4.2.3 Strength of FR Moment Frames

9.4.2.3.1 General Component strengths shall be computed in accordance with the general requirements of Section 9.3.2 and the specific requirements of this section.

9.4.2.3.2 Linear Static and Dynamic Procedures

1. **Beams.** The strength of structural steel elements under flexural actions shall be calculated in accordance with this section if the calculated axial load does not exceed 10% of the axial strength.

   The expected flexural strength, Q_{CE}, of beam components shall be determined using equations for design strength, M_n, given in AISC 341, except that ϕ shall be taken as 1.0 and F_{ye} shall be substituted for F_y. The component expected strength, Q_{CE}, of beams and other flexural deformation-controlled members shall be the lowest value obtained for the limit states of yielding, lateral-torsional buckling, local flange buckling, or shear yielding of the web.

   For fully concrete-encased beams where confining reinforcement is provided to allow the concrete to remain in place during the earthquake, the values of $b_f = 0$ and $L_b = 0$ shall be permitted to be used. For bare beams bent about their major axes and symmetric about both axes, satisfying the requirements of compact sections, and $L_b < L_p$, Q_{CE} shall be computed in accordance with Eq. (9-6):

$$Q_{CE} = M_{CE} = M_{pCE} = ZF_{ye} \tag{9-6}$$

   where b_f = width of the compression flange;
   L_b = distance between points braced against lateral displacement of the compression flange, or between points braced to prevent twist of the cross section, per AISC 360;
   L_p = limiting lateral unbraced length for full plastic bending capacity for uniform bending from AISC 360;
   M_{pCE} = expected plastic moment capacity; and
   F_{ye} = expected yield strength of the material.

   The limit states of local and lateral torsional buckling need not be considered for components either subjected to bending about their minor axes or fully encased in concrete where confining reinforcement is provided to allow the concrete to remain in place during an earthquake.

   If the beam strength is governed by the shear strength of the unstiffened web and $\frac{h}{t_w} \le \frac{418}{\sqrt{F_y}}$, then V_{CE} shall be calculated in accordance with Eq. (9-7):

$$Q_{CE} = V_{CE} = 0.6F_{ye}A_w \tag{9-7}$$

   where V_{CE} = expected shear strength;
   A_w = nominal area of the web = $d_b t_w$;
   t_w = web thickness;
   h = distance from inside of compression flange to inside of tension flange;
   F_{ye} = expected yield strength of the material; and
   F_y = specified minimum of yield strength; must be in kip/in.^{2} where used to determine applicability per Eq. (9-7).

   If $\frac{h}{t_w} > \frac{418}{\sqrt{F_y}}$, then the value of V_{CE} shall be calculated from AISC 341 (2010a).

2. **Columns.** This section shall be used to evaluate flexural and axial strengths of structural steel elements if the calculated axial load exceeds 10% of the axial strength.

   The lower-bound strength, Q_{CL}, of steel columns under axial compression shall be the lowest value obtained for the limit states of column buckling, local flange buckling, or local web buckling. The effective design strength or the lower-bound axial compressive strength, P_{CL}, shall be calculated in accordance with AISC 360, taking $\phi = 1.0$ and using the lower-bound strength, F_{yLB}, for yield strength.

   The expected axial strength of a column in tension, Q_{CE}, shall be computed in accordance with Eq. (9-8):

$$Q_{CE} = T_{CE} = A_c F_{ye} \tag{9-8}$$

   where A_c = area of column;
   F_{ye} = expected yield strength of the material; and
   T_{CE} = expected tensile strength of column.

3. **Panel Zone.** The strength of the panel zone shall be calculated using Eq. (9-5).
4. **FR Beam–Column Connections.** The strength of connections shall be based on the controlling mechanism considering all potential modes of failure.

C9.4.2.3.2 Linear Static and Dynamic Procedures **FR Beam–Column Connections.** The design professional is directed to FEMA 351 (2000b) for guidance in determining the strength of various FR connection configurations.

9.4.2.3.3 Nonlinear Static Procedure The complete load-deformation relationship of each component as depicted in Fig. 9-1 shall be determined in accordance with Section 9.4.2.2.2. The values for expected strength, Q_{CE}, shall be the same as those used for linear procedures as specified in Section 9.4.2.3.2.

9.4.2.3.4 Nonlinear Dynamic Procedures The complete hysteretic behavior of each component shall be determined experimen-

tally or by other procedures approved by the authority having jurisdiction.

C9.4.2.3.4 Nonlinear Dynamic Procedures FEMA 355D (2000e) is a useful reference for information concerning nonlinear behavior of various tested connection configurations.

9.4.2.4 Acceptance Criteria for FR Moment Frames

9.4.2.4.1 General Component acceptance criteria shall be computed in accordance with the general requirements of Section 9.3.2 and the specific requirements of this section.

C9.4.2.4.1 General The strength and behavior of steel moment-resisting frames is typically governed by the connections. The design professional is urged to determine the controlling limit state of the system where selecting the corresponding acceptance criterion.

9.4.2.4.2 Linear Static and Dynamic Procedures

1. **Beams.** The acceptance criteria of this section shall apply to flexural actions of structural steel elements that have a calculated axial load that does not exceed 10% of the axial strength. Beam flexure and shear shall be considered deformation controlled.

   For built-up shapes, the adequacy of lacing plates shall be evaluated using the provisions for tension braces in Section 9.5.2.4.

   Values for the m-factor used in Eq. (7-36) shall be as specified in Table 9-4. For fully concrete-encased beams where confining reinforcement is provided to allow the concrete to remain in place during an earthquake, the values of $b_f = 0$ and $L_b = 0$ shall be used for the purpose of determining m. If $Q_{CE} < M_{pCE}$ because of lateral torsional buckling, then m in Eq. (7-36) shall be replaced by m_e, calculated in accordance with Eq. (9-9):

$$m_e = m - (m-1)\left(\frac{M_p - M_n}{M_p - M_r}\right) \geq 1.0 \qquad (9\text{-}9)$$

   where M_n = nominal flexural capacity determined in accordance with AISC 341;
   M_p = plastic moment capacity determined in accordance with AISC 360;
   M_r = limiting buckling moment determined in accordance with AISC 360;
   m = value of m given in Table 9-4; and
   m_e = effective m due to lateral torsional buckling.

   For built-up shapes, where the strength is governed by the strength of the lacing plates that carry component shear, the m-factor shall be taken as 0.5 times the applicable value in Table 9-4, unless larger values are justified by tests or analysis; however, m need not be taken as less than 1.0. For built-up laced beams and columns fully encased in concrete, local buckling of the lacing need not be considered where confining reinforcement is provided to allow the encasement to remain in place during a design earthquake.

2. **Columns.** For steel columns under combined axial compression and bending stress, where the axial column load is less than 50% of the lower-bound axial column strength, P_{CL}, the column shall be considered deformation controlled for flexural behavior and force controlled for compressive behavior, and the combined strength shall be evaluated by Eq. (9-10) or (9-11).

   For $0.2 \leq \dfrac{P_{UF}}{P_{CL}} \leq 0.5$,

$$\frac{P_{UF}}{P_{CL}} + \frac{8}{9}\left[\frac{M_x}{m_x M_{CEx}} + \frac{M_y}{m_y M_{CEy}}\right] \leq 1.0 \qquad (9\text{-}10)$$

   For $\dfrac{P_{UF}}{P_{CL}} < 0.2$,

$$\frac{P_{UF}}{2P_{CL}} + \frac{M_x}{m_x M_{CEx}} + \frac{M_y}{m_y M_{CEy}} \leq 1.0 \qquad (9\text{-}11)$$

   where P_{UF} = axial force in the member computed in accordance with Section 7.5.2.2.2;
   P_{CL} = lower-bound compression strength of the column;
   M_x = bending moment in the member for the x-axis computed in accordance with Section 7.5.2.2.1;
   M_y = bending moment in the member for the y-axis computed in accordance with Section 7.5.2.2.1;
   M_{CEx} = expected bending strength of the column for the x-axis;
   M_{CEy} = expected bending strength of the column for the y-axis;
   m_x = value of m for the column bending about the x-axis in accordance with Table 9-4; and
   m_y = value of m for the column bending about the y-axis in accordance with Table 9-4.

   Steel columns with axial compressive forces exceeding 50% of the lower-bound axial compressive strength, P_{CL}, shall be considered force controlled for both axial loads and flexure and shall be evaluated using Eq. (9-12):

$$\frac{P_{UF}}{P_{CL}} + \frac{M_{UFx}}{M_{CLx}} + \frac{M_{UFy}}{M_{CLy}} \leq 1 \qquad (9\text{-}12)$$

   where P_{UF} = axial load in the member, calculated in accordance with Section 7.5.2.2.2;
   M_{UFx} = bending moment in the member about the x-axis, calculated in accordance with Section 7.5.2.2.2;
   M_{UFy} = bending moment in the member about the y-axis, calculated in accordance with Section 7.5.2.2.2;
   M_{CLx} = lower-bound flexural strength of the member about the x-axis; and
   M_{CLy} = lower-bound flexural strength of the member about the y-axis.

   Flexural strength shall be calculated in accordance with AISC 341, taking $\phi = 1.0$ and using the lower-bound value for yield strength.

   For columns under combined compression and bending, lateral bracing to prevent torsional buckling shall be provided as required by AISC 360.

   Steel columns under axial tension shall be considered deformation controlled and shall be evaluated using Eq. (9-13).

   Steel columns under combined axial tension and bending stress shall be considered deformation controlled and shall be evaluated using Eq. (9-13):

$$\frac{T}{m_t T_{CE}} + \frac{M_x}{m_x M_{CEx}} + \frac{M_y}{m_y M_{CEy}} \leq 1.0 \qquad (9\text{-}13)$$

where M_x = bending moment in the member for the x-axis;
M_y = bending moment in the member for the y-axis;
M_{CEx} = expected bending strength of the column for the x-axis;
M_{CEy} = expected bending strength of the column for the y-axis;
m_t = value of m for the column in tension based on Table 9-4;
m_x = value of m for the column bending about the x-axis based on Table 9-4;
m_y = value of m for the column bending about the y-axis based on Table 9-4;
T = tensile load in column; and
T_{CE} = expected tensile strength of column computed in accordance with Eq. (9-8).

3. **Panel Zone.** Shear behavior of panel zones shall be considered deformation controlled and shall be evaluated using Eq. (7-36) with the expected panel zone shear strength, Q_{CE}, calculated according to Eq. (9-5) and m-factors taken from Table 9-4.
4. **FR Beam–Column Connections.** FR connections identified in Table 9-5 shall be considered deformation controlled and evaluated in accordance with Eq. (7-36) with Q_{UD} and Q_{CE} taken as the computed demand and capacity of the critical connection component, respectively, and m-factors taken from Table 9-4 as modified below.

Connection acceptance criteria are dependent on the detailing of continuity plates (column stiffeners that align with the beam flanges), the strength of the panel zone, the beam span-to-depth ratio, and the slenderness of the beam web and flanges. Tabulated m-factors in Table 9-4 shall be modified as determined by the following four conditions. The modifications shall be cumulative, but the resulting m-factors need not be taken as less than 1.0.

4.1 If the connection does not satisfy at least one of the following conditions, the tabulated m-factors in Table 9-4 shall be multiplied by 0.8.

$$t_{cf} \geq \frac{b_{bf}}{5.2}$$

or

$$\frac{b_{bf}}{7} \leq t_{cf} < \frac{b_{bf}}{5.2} \text{ and continuity plates with } t \geq \frac{t_{bf}}{2}$$

or

$$t_{cf} < \frac{b_{bf}}{7} \text{ and continuity plates with } t > t_{bf}$$

where t_{cf} = thickness of column flange;
b_{bf} = width of beam flange;
t = thickness of continuity; and
t_{bf} = thickness of beam flange.

4.2 If one of the following conditions is not met, the tabulated m-factors in Table 9-4 shall be multiplied by 0.8.

$$0.6 \leq \frac{V_{PZ}}{V_y} \leq 0.9$$

where $V_y = 0.55F_{ye(\text{col})}d_c t_{cw}$, and V_{PZ} is the computed panel zone shear at the development of a hinge at the critical location of the connection. For M_y at the face of the column,

$$V_{PZ} = \frac{\sum M_{y(\text{beam})}}{d_b}\left(\frac{L}{L-d_c}\right)\left(\frac{h-d_b}{h}\right)$$

where $F_{ye(\text{col})}$ = expected yield strength of column;
d_c = column depth;
t_{cw} = thickness of column web;
$M_{y(\text{beam})}$ = yield moment of beam;
d_b = depth of beam;
L = length of beam, center-to-center of columns; and
h = average story height of columns.

4.3 If the clear span-to-depth ratio, L_c/d, is greater than 10, the tabulated m-factors in Table 9-4 shall be multiplied by:

$$1.4 - 0.04\frac{L_c}{d}$$

where L_c = length of beam, clear span between columns; and
d = depth of member.

4.4 If the beam flange and web meet the following conditions, the tabulated m-factors in Table 9-4 need not be modified for flange and web slenderness.

$$\frac{b_f}{2t_f} < \frac{52}{\sqrt{F_{ye}}} \text{ and } \frac{h}{t_w} < \frac{418}{\sqrt{F_{ye}}}$$

If the beam flange or web slenderness values exceed either of the following limits, the tabulated m-factors in Table 9-4 shall be multiplied by 0.5.

$$\frac{b_f}{2t_f} > \frac{65}{\sqrt{F_{ye}}} \text{ or } \frac{h}{t_w} > \frac{640}{\sqrt{F_{ye}}}$$

where b_f = width of beam flange;
t_f = thickness of beam flange;
h = height of beam web;
t_w = thickness of beam web; and
F_{ye} = expected yield strength of column.

Straight-line interpolation, based on the case that results in the lower modifier, shall be used for intermediate values of beam flange or web slenderness.

Type FR connections designed to promote yielding of the beam remote from the column face shall be considered force controlled and shall be designed using Eq. (9-14):

$$Q_{CLc} \geq Q_{CEb} \tag{9-14}$$

where Q_{CLc} = the lower-bound strength of the connection; and
Q_{CEb} = expected bending strength of the beam.

C9.4.2.4.2 Linear Static and Dynamic Procedures **Columns.** Many older frames may have steel columns with reinforced concrete encasement for fire protection. The composite stiffness and resistance of these members may be significant, but the composite resistance may be lost at larger deformations if the concrete encasement does not have adequate confinement. It may frequently be advantageous to use this increased resistance, but the increase must be justified by rational analysis of the composite section, including full consideration of the ductility and inelastic deformation capacity of the member.

FR Beam–Column Connections. The continuity plate modifier is based on recommendations in FEMA 355F (2000f) for

continuity plate detailing in relationship to column flange thickness.

The panel zone modifier is based on research in FEMA 355F (2000f) indicating that connection performance is less ductile where the strength of the panel zone is either too great or too small compared with the flexural strength of the beam. The panel zone strength range between 60% and 90% of the beam strength is considered to provide balanced yielding between the beam and panel zone, which results in more desirable performance.

The clear span-to-depth ratio modifier for linear acceptance criteria reflects the decreased apparent ductility that arises because of increased elastic rotations for longer beams. The decreased plastic rotation capacity of beams with very small L_c/d ratios is not reflected directly. However, the modifier for linear criteria was developed so that it would be appropriate for the predominant case of L_c/d ratios greater than about 5.

The beam flange and web slenderness modifiers are based on the same modifications to beam acceptance criteria contained in Table 9-4. Though not an aspect of the connection itself, beam flange and web slenderness affect the behavior of the connection assembly.

Type FR connections designed to promote yielding of the beam in the span, remote from the column face, are discussed in FEMA 350 (2000a).

9.4.2.4.3 Nonlinear Static and Dynamic Procedures Calculated component actions shall satisfy the requirements of Section 7.5.3. Maximum permissible inelastic deformations shall be taken from Tables 9-6 and 9-7.

1. **Beams.** Flexural actions of beams shall be considered deformation controlled. Permissible plastic rotation deformation shall be as indicated in Tables 9-6 and 9-7, where θ_y shall be calculated in accordance with Section 9.4.2.2.2.
2. **Columns.** Axial compressive loading of columns shall be considered force controlled, with the lower-bound axial compression capacity, P_{CL}, computed in accordance with Section 9.4.2.4.2.

   Flexural loading of columns, with axial loads at the target displacement less than 50% of P_{CL}, computed in accordance with Section 9.4.2.4.2, shall be considered deformation controlled, and maximum permissible plastic rotation demands on columns, in radians, shall be as indicated in Tables 9-6 and 9-7, dependent on the axial load present and the compactness of the section.

   Flexural loading of columns, with axial loads at the target displacement greater than or equal to 50% of P_{CL}, computed in accordance with Section 9.4.2.4.2, shall be considered force controlled and shall conform to Eq. (9-12).
3. **FR Connection Panel Zones.** Plastic rotation demands on panel zones shall be evaluated using the acceptance criteria provided in Table 9-6.
4. **FR Beam–Column Connections.** FR connections identified in Table 9-5 shall be considered deformation controlled, and the plastic rotation predicted by analysis shall be compared with the acceptance criteria in Table 9-6 as modified below. Connection acceptance criteria are dependent on the detailing of continuity plates, the strength of the panel zone, the beam span-to-depth ratio, and the slenderness of the beam web and flanges as determined by the following four conditions. The modifications shall be cumulative.

   4.1 If the connection does not satisfy at least one of the following conditions, the tabulated plastic rotation in Table 9-6 shall be multiplied by 0.8.

$$t_{cf} \geq \frac{b_{bf}}{5.2}$$

or

$$\frac{b_{bf}}{7} \leq t_{cf} < \frac{b_{bf}}{5.2} \text{ and continuity plates with } t \geq \frac{t_{bf}}{2}$$

or

$$t_{cf} < \frac{b_{bf}}{7} \text{ and continuity plates with } t \geq t_{bf}$$

where t_{cf} = thickness of column flange;
b_{bf} = width of beam flange;
t = thickness of continuity plate; and
t_{bf} = thickness of beam flange.

4.2 If the following condition is not met, the tabulated plastic rotations in Table 9-6 shall be multiplied by 0.8.

$$0.6 \leq \frac{V_{PZ}}{V_y} \leq 0.9$$

where $V_y = 0.55F_{ye(\text{col})}d_c t_{cw}$ and V_{PZ} is the computed panel zone shear at the development of a hinge at the critical location of the connection. For M_{ye} at the face of the column,

$$V_{PZ} = \frac{\sum M_{y(\text{beam})}}{d_b}\left(\frac{L}{L-d_c}\right)\left(\frac{h-d_b}{h}\right)$$

where $F_{ye(\text{col})}$ = expected yield strength of column;
d_c = column depth;
t_{cw} = thickness of column web;
$M_{y(\text{beam})}$ = yield moment of beam;
d_b = depth of beam;
L = length of beam, center-to-center of columns; and
h = average story height of columns.

4.3 If the clear span-to-depth ratio, L_c/d, is less than 8, the tabulated plastic rotations in Table 9-6 shall be multiplied by

$$(0.5)^{[(8-L_c/d)/3]}$$

L_c= length of beam, clear span between columns; and
d = depth of member.

4.4 If the beam flange and web meet the following conditions, the tabulated plastic rotations in Table 9-6 need not be modified for flange and web slenderness.

$$\frac{b_f}{2t_f} < \frac{52}{\sqrt{F_{ye}}} \text{ and } \frac{h}{t_w} < \frac{418}{\sqrt{F_{ye}}}$$

If the beam flange or web slenderness values exceed either of the following limits, the tabulated plastic rotations in Table 9-6 shall be multiplied by 0.5.

$$\frac{b_f}{2t} > \frac{65}{\sqrt{F_{ye}}} \text{ or } \frac{h}{t_w} > \frac{640}{\sqrt{F_{ye}}}$$

where b_f = width of beam flange;
t_f = thickness of beam flange;
h = height of beam web;
t_w = thickness of beam web; and
F_{ye} = expected yield strength.

Straight-line interpolation, based on the case that results in the lower modifier, shall be used for intermediate values of beam flange or web slenderness.

Type FR connections designed to promote yielding of the beam in the span remote from the column face shall be considered force controlled and shall be evaluated to ensure that the lower-bound strength of the connection exceeds the expected flexural strength of the beam at the connection.

C9.4.2.4.3 Nonlinear Static and Dynamic Procedures **Columns.** Many older frames may have steel columns with reinforced concrete encasement for fire protection. The composite stiffness and resistance of these members may be significant, but the composite resistance may be lost at larger deformations if the concrete encasement does not have adequate confinement. It may frequently be advantageous to use this increased resistance, but the increase must be justified by rational analysis of the composite section, including full consideration of the ductility and inelastic deformation capacity of the member.

FR Beam–Column Connections. The continuity plate modifier is based on recommendations in FEMA 355F for continuity plate detailing in relationship to column flange thickness.

The panel zone modifier is based on research in FEMA 355F (2000f) indicating that connection performance is less ductile where the strength of the panel zone is either too great or too small compared with the flexural strength of the beam. The panel zone strength range between 60% and 90% of the beam strength is considered to provide balanced yielding between the beam and the panel zone, which results in more desirable performance.

The clear span-to-depth ratio modifier for nonlinear modeling and acceptance criteria reflects decreased plastic rotation capacity for beams with hinging occurring over a shorter length. This modifier is based on the plastic rotation capacities corresponding to the FEMA 350 (2000a) L_c/d limits of 5 and 8.

The beam flange and web slenderness modifier is based on the same modifications to beam acceptance criteria contained in Table 9-6. Though not an aspect of the connection itself, beam flange and web slenderness affects the behavior of the connection assembly.

Type FR connections designed to promote yielding of the beam in the span, remote from the column face, are discussed in FEMA 350 (2000a).

9.4.2.5 Retrofit Measures for FR Moment Frames Seismic retrofit measures for FR moment frames shall meet the requirements of Section 9.3.3 and other provisions of this standard.

C9.4.2.5 Retrofit Measures for FR Moment Frames The following measures, which are presented in greater detail in FEMA 351 (2000b), may be effective in retrofitting FR moment frames:

1. Add steel braces to one or more bays of each story to form concentrically or eccentrically braced frames to increase the stiffness of the frames. The attributes and design criteria for braced frames are specified in Section 9.5. The location of added braces should be selected so as to not substantially increase horizontal torsion in the system;
2. Add concrete or masonry shear walls or infill walls to one or more bays of each story to increase the stiffness and strength of the structure. The attributes and design requirements of concrete and masonry shear walls are specified in Sections 10.7 and 11.3, respectively. The attributes and design requirements of concrete and masonry infills are specified in Sections 10.6 and 11.4, respectively. The location of added walls should be selected so as not to substantially increase horizontal torsion in the system;
3. Attach new steel frames to the exterior of the building. The retrofitted structure should be checked for the effects of the change in the distribution of stiffness, the seismic load path, and the connections between the new and existing frames. The retrofit scheme of attaching new steel frames to the exterior of the building has been used in the past and has been shown to be very effective under certain conditions. This retrofit approach may be structurally efficient, but it changes the architectural appearance of the building. The advantage is that the retrofit may take place without disrupting the use of the building;
4. Reinforce moment-resisting connections to force plastic hinge locations in the beam material away from the joint region to reduce the stresses in the welded connection, thereby reducing the possibility of brittle fractures. This scheme should not be used if the welded connections in the existing structure did not use weld material of sufficient toughness to avoid fracture at stresses lower than yield or where strain-hardening at the new hinge location would produce larger stresses than the existing ones at the weld. The retrofit measures to reinforce selected moment-resisting connections should consist of providing horizontal cover plates, vertical stiffeners, or haunches. Removal of beam material to force the plastic hinge into the beam and away from the joint region can also be used subject to the above restrictions. Guidance on the design of these modifications of FR moment connections is discussed in FEMA 351 (2000b);
5. Add energy dissipation devices as specified in Chapter 14; and
6. Increase the strength and stiffness of existing frames by welding steel plates or shapes to selected members.

9.4.3 Partially Restrained (PR) Moment Frames

9.4.3.1 General PR moment frames shall be defined as those moment frames with connections identified as PR in Table 9-5. Moment frames with connections not included in Table 9-5 shall be defined as PR if the deformations of the beam-to-column joints contribute greater than 10% to the total lateral deflection of the frame or where the strength of the connections is less than the strength of the weaker of the two members being joined. For a PR connection with two or more failure modes, the weakest failure mechanism shall be considered to govern the behavior of the joint.

Design provisions for PR frames specified in AISC 341 or ASCE 7 shall apply unless superseded by the provisions in this standard. Equations for calculating nominal design strength shall be used for determining the expected strength, except $\phi = 1$, and either the expected strength or lower-bound strength shall be used in place of F_y, as further indicated in this standard.

C9.4.3.1 General Table 9-5 includes simple shear or pinned connections classified as PR connections. Although the gravity load-carrying beams and columns are typically neglected in the seismic analysis of steel moment-frame structures, SAC research contained in FEMA 355D (2000e) indicates that these connections are capable of contributing nonnegligible stiffness through very large drift demands. Including gravity load-carrying elements (subject to the modeling procedures and acceptance criteria in this section) in the mathematical model could be used by the design engineer to reduce the demands on the moment-frame elements.

9.4.3.2 Stiffness of PR Moment Frames

9.4.3.2.1 Linear Static and Dynamic Procedures

1. **Beams, columns, and panel zones.** Axial area, shear area, moment of inertia, and panel zone stiffness shall be determined as specified in Section 9.4.2.2 for FR frames.
2. **Connections.** The rotational stiffness K_θ of each PR connection for use in PR frame analysis shall be determined by the procedure of this section, by experiment, or by an approved rational analysis. The deformation of the connection shall be included where calculating frame displacements.

   The rotational spring stiffness, K_θ, shall be calculated in accordance with Eq. (9-15):

$$K_\theta = \frac{M_{CE}}{0.005} \tag{9-15}$$

   where M_{CE} = expected moment strength of connection for the following PR connections:

   1. PR connections encased in concrete, where the nominal resistance, M_{CE}, determined for the connection shall include the composite action provided by the concrete encasement;
   2. PR connections encased in masonry, where composite action shall not be included in the determination of connection resistance, M_{CE}; and
   3. Bare steel PR connections.

   For PR connections not listed above, the rotational spring stiffness shall be calculated in accordance with Eq. (9-16):

$$K_\theta = \frac{M_{CE}}{0.003} \tag{9-16}$$

   As a simplified alternative, modeling the frame as for FR joints but with the beam stiffness, EI_b, adjusted to account for the flexibility of the joints in accordance with Eq. (9-17), shall be permitted:

$$EI_{b\,\text{adjusted}} = \frac{1}{\dfrac{12}{L_b^2 K_\theta} + \dfrac{1}{EI_b}} \tag{9-17}$$

   where K_θ = equivalent rotational spring stiffness of connection per Eq. (9-15) or (9-16);
   M_{CE} = expected moment strength;
   I_b = moment of inertia of the beam;
   E = modulus of elasticity; and
   L_b = centerline span of the beam.

   Where Eq. (9-17) is used, the adjusted beam stiffness shall be used in standard rigid-connection frame analysis and the rotation of the connection shall be taken as the rotation of the beam at the joint.

C9.4.3.2.1 Linear Static and Dynamic Procedures FEMA 274 (1997b) is a useful reference for information concerning stiffness properties and modeling guidelines for PR connections.

9.4.3.2.2 Nonlinear Static Procedure If the nonlinear static procedure (NSP) of Chapter 7 is used, the following criteria shall apply:

1. The elastic component properties shall be modeled as specified in Section 9.4.3.2.1;
2. The nonlinear moment curvature or load-deformation behavior for beams, beam–columns, and panel zones shall be modeled as specified in Section 9.4.2.2 for FR frames; and
3. In lieu of relationships derived from experiment or analysis, the generalized load-deformation curve shown in Fig. 9-1 with its parameters *a*, *b*, and *c* as defined in Table 9-6, shall be used to represent moment-rotation behavior for PR connections in accordance with Section 9.4.2.2.2. The value for θ_y shall be 0.005 for connections, for which Eq. (9-15) in Section 9.4.3.2.1 applies, or 0.003 for all other connections.

C9.4.3.2.2 Nonlinear Static Procedure FEMA 355D (2000e) is a useful reference for information concerning nonlinear behavior of various tested connection configurations.

9.4.3.2.3 Nonlinear Dynamic Procedure The complete hysteretic behavior of each component shall be modeled as verified by experiment or by other procedures approved by the authority having jurisdiction.

C9.4.3.2.3 Nonlinear Dynamic Procedure FEMA 355D (2000e) is a useful reference for information concerning nonlinear behavior of various tested connection configurations.

9.4.3.3 Strength of PR Moment Frames

9.4.3.3.1 General Component strengths shall be computed in accordance with the general requirements of Section 9.3.2 and the specific requirements of this section.

9.4.3.3.2 Linear Static and Dynamic Procedures The strength of steel beams and columns in PR moment frames being analyzed using linear procedures shall be computed in accordance with Section 9.4.2.3.2 for FR moment frames.

The expected strength, Q_{CE}, for PR connections shall be based on procedures specified in AISC 360, based on experiment, or based on the procedures listed in the subsequent sections.

1. **Top and Bottom Clip Angle Connection.** The moment strength, M_{CE}, of the riveted or bolted clip angle connection, as shown in Fig. 9-3, shall be the smallest value of M_{CE} computed for the following four limit states:
   1.1 **Limit State 1.** If the shear connectors between the beam flange and the flange angle control the capacity of the connection, Q_{CE} shall be computed in accordance with Eq. (9-18):

$$Q_{CE} = M_{CE} = d_b\left(F_{ve}A_bN_b\right) \tag{9-18}$$

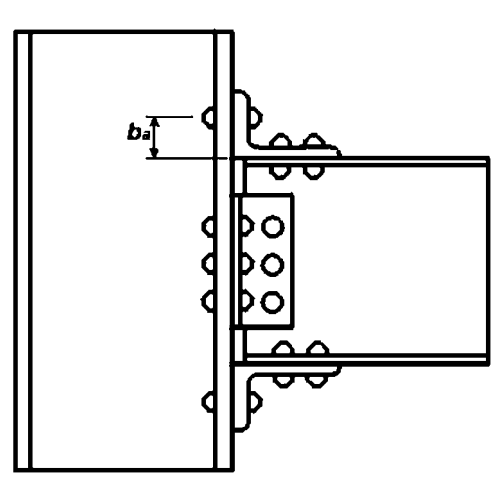

FIG. 9-3. Top and Bottom Clip Angle Connection

where A_b = gross area of rivet or bolt;
d_b = overall beam depth;
F_{ve} = unfactored nominal shear strength of the bolts or rivets given in AISC 360; and
N_b = least number of bolts or rivets connecting the top or bottom angle to the beam flange.

1.2 **Limit State 2.** If the tensile capacity of the horizontal leg of the connection controls the capacity, P_{CE} shall be taken as the smaller of that computed by Eq. (9-19) or (9-20):

$$P_{CE} \le F_{ye}A_g \tag{9-19}$$

$$P_{CE} \le F_{te}A_e \tag{9-20}$$

and Q_{CE} shall be calculated in accordance with Eq. (9-21):

$$Q_{CE} = M_{CE} \le P_{CE}(d_b + t_a) \tag{9-21}$$

where F_{ye} = expected yield strength of the angle;
F_{te} = expected tensile strength of the angle;
A_e = effective net area of the horizontal leg;
A_g = gross area of the horizontal leg; and
t_a = thickness of angle.

1.3 **Limit State 3.** If the tensile capacity of the rivets or bolts attaching the vertical outstanding leg to the column flange controls the capacity of the connection, Q_{CE} shall be computed in accordance with Eq. (9-22):

$$Q_{CE} = M_{CE} = (d_b + b_a)(F_{te}A_bN_b) \tag{9-22}$$

where A_b = gross area of rivet or bolt;
b_a = dimension in Fig. 9-3;
F_{te} = expected tensile strength of the bolts or rivets; and
N_b = least number of bolts or rivets connecting top or bottom angle to column flange.

1.4 **Limit State 4.** If the flexural yielding of the flange angles controls the capacity of the connection, Q_{CE} shall be given by Eq. (9-23):

$$Q_{CE} = M_{CE} = \frac{wt_a^2F_{ye}}{4\left[b_a - \frac{t_a}{2}\right]}(d_b + b_a) \tag{9-23}$$

where b_a = dimension shown in Fig. 9-3; and
w = length of the flange angle.

2. **Double Split-Tee Connection.** The moment strength, M_{CE}, of the double split-Tee (T-stub) connection, as shown in Fig. 9-4, shall be the smallest value of M_{CE} computed for the following four limit states

2.1 **Limit State 1.** If the shear connectors between the beam flange and the web of the split Tee control the capacity of the connection, Q_{CE} shall be calculated using Eq. (9-18).

2.2 **Limit State 2.** If the tension capacity of the bolts or rivets connecting the flange of the split Tee to the column flange control the capacity of the connection, Q_{CE} shall be calculated using Eq. (9-24):

$$Q_{CE} = M_{CE} = (d_b + 2b_t + t_s)(F_{te}A_bN_b) \tag{9-24}$$

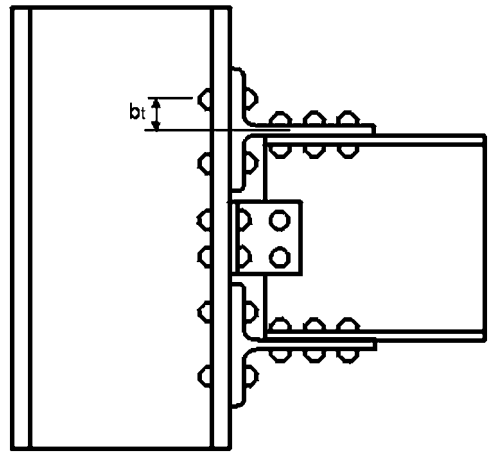

FIG. 9-4. Double Split-Tee Connection

where d_b = overall beam depth;
b_t = distance between one row of fasteners in the split-Tee flange and the centerline of the stem as shown in Fig. 9-4;
t_s = thickness of the split-Tee stem;
F_{te} = expected tensile strength of the bolts or rivets;
A_b = gross area of rivet or bolt; and
N_b = number of fasteners in tension connecting the flanges of one split Tee to the column flange.

2.3 **Limit State 3.** If tension in the stem of the split Tee controls the capacity of the connection, Eqs. 9-21 and 9-22 shall be used to determine Q_{CE}, with A_g and A_e being the gross and net areas of the split-Tee stem and replacing t_a with t_s.

2.4 **Limit State 4.** If flexural yielding of the flanges of the split Tee controls the capacity of the connection, Q_{CE} shall be determined in accordance with Eq. (9-25):

$$Q_{CE} = M_{CE} = \frac{(d_b + t_s)wt_f^2F_{ye}}{2(b_t - k_1)} \tag{9-25}$$

where k_1 = distance from the center of the split-Tee stem to the edge of the split-Tee flange fillet;
b_t = distance between one row of fasteners in the split-Tee flange and the centerline of the stem as shown in Fig. 9-4;
w = length of split Tee; and
t_f = thickness of split-Tee flange.

3. **Bolted Flange Plate Connections.** For bolted flange plate connections, as shown in Fig. 9-5, the flange plate shall be welded to the column and welded or bolted to the beam flange. This connection shall be considered fully restrained if its strength equals or exceeds the strength of the connected beam. The expected strength of the connection shall be calculated in accordance with Eq. (9-26):

$$Q_{CE} = M_{CE} = P_{CE}(d_b + t_p) \tag{9-26}$$

where P_{CE} = expected strength of the flange plate connection as governed by the net section of the flange plate, the shear capacity of the bolts, or the strength of the welds to the column flange;
t_p = thickness of flange plate; and
d_b = overall beam depth.

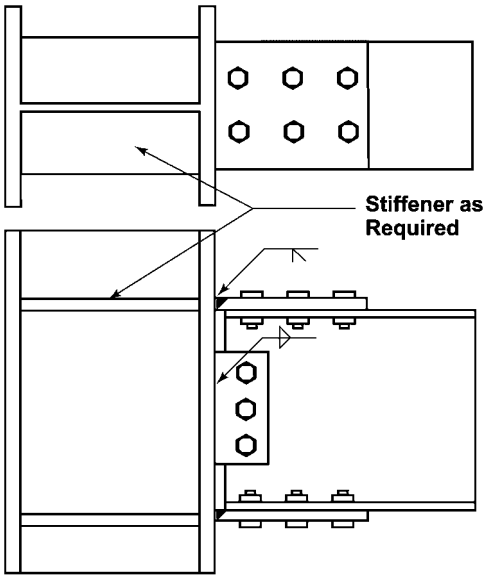

FIG. 9-5. Bolted Flange Plate Connection

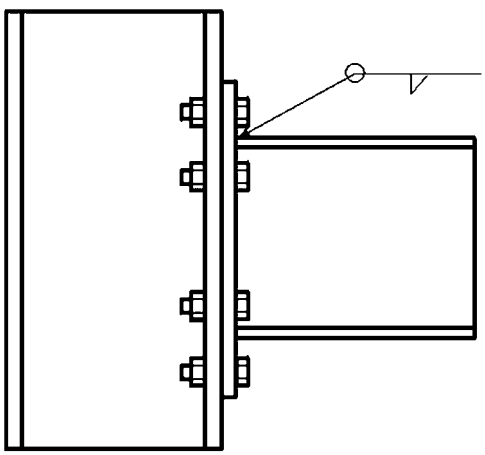

FIG. 9-6. Bolted End Plate Connection

4. **Bolted End Plate Connections.** Bolted end plate connections, as shown in Fig. 9-6, shall be considered FR if their expected and lower-bound strengths equal or exceed the expected strength of the connecting beam. The lower-bound strength, $Q_{CL} = M_{CL}$, shall be the value determined for the limit state of the bolts under combined shear and tension, and the expected strength, $Q_{CE} = M_{CE}$, shall be determined for the limit state of bending in the end plate calculated in accordance with the procedures of AISC 360 or by another procedure approved by the authority having jurisdiction.
5. **Composite Partially Restrained Connections.** Strength and deformation acceptance criteria of composite partially restrained connections shall be based on approved rational analysis procedures and experimental evidence.

9.4.3.3.3 Nonlinear Static Procedure The complete load-deformation relationship of each component as depicted by Fig. 9-1 shall be determined in accordance with Section 9.4.2.2.2. The values for expected strength, Q_{CE}, of PR connections shall be the same as those used for linear procedures as specified in Section 9.4.3.3.2.

C9.4.3.3.3 Nonlinear Static Procedure FEMA 355D (2000e) is a useful reference for information concerning nonlinear behavior of various tested connection configurations.

9.4.3.3.4 Nonlinear Dynamic Procedure The complete hysteretic behavior of each component shall be determined experimentally or by other procedures approved by the authority having jurisdiction.

C9.4.3.3.4 Nonlinear Dynamic Procedure FEMA 355D (2000e) is a useful reference for information concerning nonlinear behavior of various tested connection configurations.

9.4.3.4 Acceptance Criteria for PR Moment Frames

9.4.3.4.1 General Component acceptance criteria shall be computed in accordance with the general requirements of Section 9.3.2 and the specific requirements of this section.

C9.4.3.4.1 General The strength and behavior of PR moment frames is typically governed by the connections. The design professional is urged to consider the acceptance criteria for the mechanism that controls the system.

9.4.3.4.2 Linear Static and Dynamic Procedures Design actions shall be compared with design strengths in accordance with Section 7.5.2. The *m*-factors for steel components and connections of PR frames shall be selected from Table 9-4. Limit states for which no *m*-factors are provided in Table 9-4 shall be considered force controlled.

Acceptance criteria for steel beams and columns in PR frames shall be computed in accordance with Section 9.4.2.4.2.

9.4.3.4.3 Nonlinear Static and Dynamic Procedures Calculated component actions shall satisfy the requirements of Section 7.5.3. Maximum permissible inelastic deformations shall be taken from Tables 9-6 and 9-7.

9.4.3.5 Retrofit Measures for PR Moment Frames Seismic retrofit measures for PR moment frames shall meet the requirements of Section 9.3.3 and other provisions of this standard.

C9.4.3.5 Retrofit Measures for PR Moment Frames The retrofit measures for FR moment frames described in Section C9.4.2.5 may be effective for PR moment frames as well. PR moment frames are often too flexible to provide adequate seismic performance. Adding concentric or eccentric bracing or reinforced concrete or masonry infills may be a cost-effective retrofit measure.

Connections in PR moment frames are usually components that are weak, flexible, or both. Connections may be retrofitted by replacing rivets with high-strength bolts, adding weldment to supplement rivets or bolts, or welding stiffeners to connection pieces or combinations of these measures. Refer to FEMA 351 (2000b) for additional information concerning the retrofit of PR moment frames.

9.5 STEEL BRACED FRAMES

9.5.1 General Steel braced frames shall be defined as those frames that develop seismic resistance primarily through axial forces in the components.

Modeling procedures, acceptance criteria, and retrofit measures for concentrically braced frames (CBFs), eccentrically braced frames (EBFs), and buckling-restrained braced frames (BRBFs) shall be as specified in Sections 9.5.2, 9.5.3, and 9.5.4, respectively. Components of concentrically and eccentrically braced frames and buckling-restrained braced frames shall include columns, beams, braces, and connections. Eccentrically braced frames shall also include link beam components.

C9.5.1 General Steel braced frames act as vertical trusses where the columns are the chords and the beams and braces are the web members. In standard braced frame configurations, connections between braces, and beams and columns are typically made with gusset plates. Gusset plates at brace-to-beam or brace-to-column intersections can have a significant effect on the rigidity of beam-to-column connections, even for simple framing connections, when the size of the gusset plate is reasonably large. Column bases connected to braces at grade level are mainly subjected to large axial and shear loads, with small secondary moments in the elastic state.

Components can be bare steel, steel with a nonstructural coating for fire protection, or steel with concrete or masonry encasement.

The use of CBFs as structural seismic-force-resisting systems has a long history as compared with the more recent use of BRBFs. Seismic design and detailing of CBFs have evolved over time, and code requirements have been continually updated. Modern seismic codes for steel (AISC 341) place great attention on section compactness, component slenderness, and seismic detailing of connections to ensure ductile behavior and acceptable performance. Thus, when modeling inelastic deformation capacities for nonductile connections and components of older existing frames, the modeling parameters that are applicable to ductile detailing and compact sections as presented in this section should be used with caution. In lieu of experiments, engineering judgment and application of approved methods using engineering mechanics are permitted with proper prediction of inelastic deformation or consideration of expected nonductile behavior.

9.5.2 Concentrically Braced Frames

9.5.2.1 General Concentrically braced frames (CBFs) shall be defined as braced frame systems where component work lines intersect at a single point in a joint or at multiple points such that the distance between points of intersection, or eccentricity, e, is less than or equal to the width of the smallest member connected at the joint. Bending caused by such eccentricities shall be considered in the modeling and evaluation of the components.

C9.5.2.1 General In contrast to the intended performance of BRBFs described in Section 9.5.4, the braces in CBFs are likely to buckle both globally and locally in compression under large seismic demands, resulting in strength reduction and stiffness degradation of framing members and increasing inelastic demands for their connections after buckling. This behavior could lead to reduced energy dissipation and early fracture of section at the buckled area and gusset plate. Therefore, proper modeling of the characteristics of less favorable postbuckling behaviors of the CBF components would be beneficial for the overall performance evaluation of the frames.

9.5.2.2 Stiffness of Concentrically Based Frames

9.5.2.2.1 Linear Static and Dynamic Procedures Axial area, shear area, and moment of inertia shall be calculated as specified for FR frames in Section 9.4.2.2.1.

FR connections shall be modeled as specified in Section 9.4.2.2.1. PR connections shall be modeled as specified in Section 9.4.3.2.1.

Braces shall be modeled as columns as specified in Section 9.4.2.2.1.

The region of gusset boundary to beam, column, and brace shall be modeled as rigid unless a more detailed model is available.

Column bases shall be modeled without flexural rigidity unless it can be justified from mechanics that the base is rigid.

9.5.2.2.2 Nonlinear Static Procedure If the NSP of Chapter 7 is used, the following criteria shall apply:

1. The elastic component properties shall be modeled as specified in Section 9.5.2.2.1;
2. The nonlinear moment-rotational deformation behavior to represent yielding or buckling, postyielding or postbuckling, peak strength, strength reduction after peak strength, and residual strength shall be modeled as specified in Section 9.4.2.2.2 for beams and columns with FR connections and in Section 9.4.3.2.2 for beams with PR connections;
3. Braces shall be modeled as columns with a potential plastic hinge located in the middle of the brace to consider both primary axial effects and secondary flexural effects. In lieu of relationships derived from experiments or advanced analysis, the nonlinear axial load–axial deformation behavior of braces at the plastic hinge shall be modeled as shown in Fig. 9-1 with parameters as defined in Tables 9-6 and 9-7. For braces loaded in compression, the parameter Δ in Fig. 9-1 shall represent total elastic and plastic axial deformation. If rigid plastic hinges are used, only plastic axial deformation may be considered. The parameter Δ_c in Table 9-7 shall represent the axial deformation at the expected buckling load, which occurs at point B in the curve in Fig. 9-1. The reduction in strength of a brace after buckling shall be included in the model. For braces in tension, the parameter Δ_T in Table 9-7 shall be the axial deformation at development of the expected tensile yield load in the brace, which occurs at point B in the curve in Fig. 9-1.

C9.5.2.2.2 Nonlinear Static Procedure Much research has taken place in recent years to better understand and quantify the nonlinear behavior of CBFs. Useful references for information regarding nonlinear load-deformation behavior of braces and related connections include ATC 72-1 (PEER, 2010), Aviram et al. (2010), Davaran and Far (2009), Fell et al. (2009 and 2010), FEMA 274 (1997b), FEMA P440a (2009a), Jordan (2010), Liu et al. (2000), NIST (2010a and 2010b), Richards (2009), Roeder et al. (2004, 2009a, 2009b, and 2011), Uriz and Mahin (2008), Yang (2006), Yang et al. (2008), Yoo (2006), Yoo et al. (2008 and 2009), and Zhang et al. (2011).

Recent research indicates the possibility of allowing desirable controlled yielding to occur at multiple locations (i.e., in gussets and beams, in addition to in braces) to increase the inelastic deformation capacity of special concentrically braced frames (SCBFs) (Roeder et al. 2011) and adding flexural strength and rigidity at the beam-to-column connections for nonductile CBFs can increase the redundancy and improve the performance against collapse after the buckled brace fractures (Fahnestock and Stoakes 2009 and Stoakes and Fahnestock 2010). Therefore, modeling inelastic behaviors at connections and locations of various members where plasticity can occur shall be considered as an alternative to modeling connections as rigid, elastic elements. Because many of the recent tests have focused on SCBFs with better seismic detailing on gusset connections, section compactness, and more stringent member slenderness requirements, Tables 9-6 and 9-7 and Fig. 9-1 to model older frames with less ductile detailing should be used with caution. With lack of experimental results on nonductile braced frames and components, engineering judgment is needed to reduce the deformation capacity of the components significantly, i.e., the parameters a, b, and c in Tables 9-6 and 9-7 and Fig. 9-1. It is permissible to

use approved methods using engineering mechanics and nominal strain capacity of steel (found in most ASTM specifications) to develop the parameters that are not listed in Tables 9-6 and 9-7 with proper engineering judgment for nonductile details (having very limited or no postyielding behavior). Alternatively, the factors presented in the footnotes of Tables 9-6 and 9-7 can be used to reduce acceptance criteria values for CBFs not satisfying modern detailing provisions.

If it is determined that modeling brace-to-gusset connections, beam-to-column connections, column splices, and column–base connections as rigid and elastic is not acceptable for a particular building, it is recommended that the inelastic force-deformation behavior of these connections be considered and the connection behaviors be modeled as inelastic hinges that may be connected with other member or connection components in series. In lieu of relationships derived from experiment or advanced analysis, the nonlinear force-deformation behavior of the hinges may be modeled as shown in Fig. 9-1 with parameters as defined in Tables 9-6 and 9-7. The brace-to-gusset connection may be modeled with both nonlinear axial buckling and yielding deformations and inelastic out-of-plane flexural deformation behaviors unless retrofit of the gusset is ensured where a sufficiently large value of the parameter *a* in Fig. 9-1 may be used or the lines C–D, D–E, and the parameter *c* are ignored. The effect of rigidity from the gusset plate to connecting beam and column may be modeled with consideration of the size of gusset. Potential plastic hinges in the beam and column just outside of the edges of the gusset may be modeled.

Inelastic behavior of the column base subjected to net tension should be considered in the modeling for potential rocking mode of the entire braced frame.

Modeling inelastic behavior of column splice connections should be considered for flexural, axial, and shear deformations based on connection details properly judged as FR or PR connections unless complete full-penetration welds are used to join columns at the splice or the splice is strengthened to the full strengths of adjacent weaker column. When testing data are not available, modeling parameters and acceptance criteria for PR moment-frame connections in Table 9-6 may be used for modeling of the splice with proper consideration of axial load effects on reduction of flexural deformation and strength.

9.5.2.2.3 Nonlinear Dynamic Procedure The complete hysteretic behavior of each component shall be based on experiment or other approved methods. If experimental data are not available for the formulation of component behavior, it is acceptable to use the component load-deformation parameters described in Section 9.5.2.2.2 for modeling force-displacement capacity boundary or backbone curve and applying hysteretic rules for corresponding components. The hysteretic load and deformation paths shall not cross beyond the force–displacement capacity boundary or backbone curve. The characteristics of the hysteretic loops, including cyclic stiffness degradation in unloading and reloading, cyclic strength degradation, and in-cycle strength degradation, shall be realistically represented in the modeling if exact cyclic degradation slopes vary for different components.

C9.5.2.2.3 Nonlinear Dynamic Procedure Much research has taken place in recent years to better understand and quantify the nonlinear behavior of concentrically braced frames. Useful references for information regarding nonlinear load-deformation behavior of braces include those in C9.5.2.2.2.

Compared with the braces of BRBFs, the braces in CBFs buckle in compression, both globally and locally, under large seismic action. This buckling may result in significant cyclic stiffness and strength degradation and in-cycle strength degradation of axial load resistance. These cyclic degradation behaviors shall be modeled for braces and other components having similar behavior in NDP.

9.5.2.3 Strength of Concentrically Based Frames

9.5.2.3.1 General Component strengths shall be computed in accordance with the general requirements of Section 9.3.2 and the specific requirements of this section.

9.5.2.3.2 Linear Static and Dynamic Procedures The expected strength, Q_{CE}, of steel braces under axial compression shall be the lowest value obtained for the limit states of component buckling or local buckling. The effective design strength, P_{CE}, shall be calculated in accordance with AISC 360, taking $\phi = 1.0$ and using the expected yield strength, F_{ye}, for yield strength.

For common cross-bracing configurations where both braces cross at their midpoints and are attached to a common gusset plate, the effective length of each brace shall be taken as 0.5 times the total length of the brace, excluding gusset plates for both axes of buckling. For other bracing configurations (chevron, V, single brace), the length of the brace is the end-to-end length of the brace if gusset plates are used, and 0.7 of the work point to work point length if FR welded end connections of the brace are used.

The expected strength, Q_{CE}, of steel braces in tension shall be calculated as for columns, in accordance with Section 9.4.2.3.2.

Expected, Q_{CE}, and lower-bound, Q_{CL}, strengths of beams and columns shall be calculated as for FR frame beams and columns in Section 9.4.2.3. Strength of beams with axial load that exceeds 10% of the axial strength shall be as calculated for FR frame columns.

The lower-bound strength of connections shall be calculated in accordance with AISC 360 and the procedures in the AISC *Steel Manual Construction* (2010), taking $\phi = 1.0$ and using the lower-bound yield strength, F_{yLB}, for yield strength.

9.5.2.3.3 Nonlinear Static Procedure In lieu of relationships derived by experiment or advanced analysis, the complete load-deformation behavior of each component shall be determined in accordance with Section 9.5.2.2.2 for the force–displacement capacity boundary or backbone curve. The values for expected strength, Q_{CE}, shall be as specified in Section 9.5.2.3.2 for linear procedures.

C9.5.2.3.3 Nonlinear Static Procedure It is recommended that the effect of axial force on flexural strength or axial force–moment interaction in either uniaxial or biaxial bending be modeled for columns, braces, and beams that are subjected to large axial forces.

It is recommended that the effect of cyclic strength degradation caused by the cyclic nature of loading on the force–deformation capacity boundary or backbone curve at the plastic hinges be considered (the points B, C, D, and E in Fig. 9-1 tend to move toward the point A). In lieu of derivation from experiments, the percentage reduction for strength capacity may be modeled per Tall Building Initiative (2010) ATC 72-1 (PEER, 2010).

It is recommended that strain-hardening effects be considered for component strengths that are based on expected tensile strength of materials. In lieu of derivation from tests, a 10% strain-hardening may be used for steel.

Connection strength and behavior have a dramatic impact on the performance of concentrically braced frames, particularly in frames that do not comply with the modern detailing requirements presented in AISC 341. Therefore, it is recommended that connections be explicitly modeled in a proper way to simulate

realistic characteristics of their full range of strengths. In lieu of derivation from tests, approved methods using engineering mechanics are permitted to model the strengths. For models where connection strength has not been explicitly considered, refer to Table 9-7 footnotes for additional reduction factors on the component acceptance criteria.

A multitude of research studies have been performed to better understand the behavior of CBF connections: Aviram et al. (2010), Jordan (2010), Liu and Astaneh-Asl (2000), Roeder et al. (2004 and 2011), Stoakes and Fahnestock (2010), Wijesundara et al. (2010), and Zhang et al. (2011).

9.5.2.3.4 Nonlinear Dynamic Procedure The complete hysteretic behavior of each component shall be based on experiments or other approved procedures. It is acceptable to model complete hysteretic behavior using the force–displacement capacity boundary or backbone curve as described in Section 9.5.2.2.2 and Section 9.5.2.3.3 and applying hysteretic rules.

C9.5.2.3.4 Nonlinear Dynamic Procedure The hysteretic load and deformation paths shall not cross beyond the force–displacement capacity boundary or backbone curve. The characteristics of the hysteretic loops shall be realistically represented in the modeling if exact cyclic degradation slopes vary for different components and are hard to predict.

FEMA 274 (1997b) is a useful reference for information concerning hysteretic behavior of braced frame components. Additional useful references for information regarding nonlinear load-deformation behavior of braces include those in C9.5.2.2.2, in particular FEMA P440A (2009a).

9.5.2.4 Acceptance Criteria for Concentrically Based Frames

9.5.2.4.1 General Component acceptance criteria shall be computed in accordance with the general requirements of Section 9.3.2 and the specific requirements of this section.

Axial tension and compression in braces shall be considered deformation controlled. Actions on beams and columns with axial load that exceeds 10% of the axial strength shall be considered force or deformation controlled as determined for FR frame columns in Section 9.4.2.4. Compression, tension, shear, and bending actions on brace connections, including gusset plates, bolts, welds, and other connectors, shall be considered force controlled, unless connections are explicitly modeled, and experimental evidence suggests that stable, desirable ductility can be achieved in a particular connection element.

C9.5.2.4.1 General When several deformation-controlled elements are arranged and modeled in series, a rational analysis should be performed to determine the extent of expected nonlinear behavior in each component.

9.5.2.4.2 Linear Static and Dynamic Procedures Design actions shall be compared with design strengths in accordance with Section 7.5.2. The *m*-factors for steel components shall be selected from Table 9-4.

Beams, their connections, and supporting members in V-type or inverted V-type braced frames shall be evaluated as force-controlled actions to resist the unbalanced load effects in combination with gravity loads specified in Section 7.2.2. The unbalanced load effects shall be calculated using the expected yield capacity of the brace in tension and 30% of the expected compression capacity of the brace in compression.

C9.5.2.4.2 Linear Static and Dynamic Procedures The unbalanced load provisions for V-type and inverted V-type braced frames are intended to match the requirements set forth in AISC 341.

9.5.2.4.3 Nonlinear Static and Dynamic Procedures Calculated component actions shall satisfy the requirements of Section 7.5.3. Deformation limits for components shall be taken from Tables 9-6 and 9-7.

9.5.2.5 Retrofit Measures for Concentrically Based Frames Seismic retrofit measures for CBFs shall meet the requirements in Section 9.3.3 and other provisions of this standard.

C9.5.2.5 Retrofit Measures for Concentrically Based Frames The retrofit measures for FR moment frames described in Section C9.4.2.5 may be effective for braced frames. Other modifications, which may be effective, include replacement or modification of connections that are insufficient in strength and/or ductility, and encasement of columns in concrete to improve their performance.

Modification of bracing configurations (i.e., converting V-type or inverted V-type bracing to two-story X-brace configuration or zipper-braced frame configuration) may be beneficial for improved seismic performance (Yoo et al. 2009 and Yang et al. 2008).

New steel braced frames added for retrofit purposes (i.e., adding new CBFs into an existing system) should be modeled and evaluated per the requirements of this standard and should satisfy modern detailing requirements set forth in AISC 341. FEMA 547 (2007) contains useful information pertaining to the retrofit of existing buildings. Additional references discussing the retrofit of CBFs include Rai and Goel (2003), Di Sarno et al. (2006), and Roeder et al. (2009b).

9.5.3 Eccentrically Braced Frames

9.5.3.1 General Eccentrically braced frames (EBFs) shall be defined as braced frames where component work lines do not intersect at a single point and the distance between points of intersection, or eccentricity, e, exceeds the width of the smallest member connected at the joint. The component segment between these points is defined as the link component with a span equal to the eccentricity.

9.5.3.2 Stiffness of Eccentrically Braced Frames

9.5.3.2.1 Linear Static and Dynamic Procedures The elastic stiffness of beams, columns, braces, and connections shall be the same as those specified for FR and PR moment frames and concentrically braced frames. The load-deformation model for a link beam shall include shear deformation and flexural deformation.

When not explicitly modeled in the mathematical model, the elastic stiffness of the link beam, K_e, may be computed in accordance with Eq. (9-27):

$$K_e = \frac{K_s K_b}{K_s + K_b} \tag{9-27}$$

where

$$K_s = \frac{GA_w}{e} \tag{9-28}$$

$$K_b = \frac{12EI_b}{e^3} \tag{9-29}$$

$A_w = (d_b - 2t_f)t_w$;
e = length of link beam;
G = shear modulus;
K_e = stiffness of the link beam;
K_b = flexural stiffness;
K_s = shear stiffness;
d_b = beam depth;

t_f = thickness of flange; and
t_w = thickness of web.

9.5.3.2.2 Nonlinear Static Procedure In lieu of relationships derived from experiment or analysis, the nonlinear load-deformation behavior of members of EBFs shall be modeled as shown in Fig. 9-1 and in accordance with Section 9.4.2.2.2.

Nonlinear models for beams, columns, and connections shall be the same as those for FR and PR moment frames, and for the braces the same as for concentrically braced frames shall be permitted.

The link rotation at yield shall be calculated in accordance with Eq. (9-30):

$$\theta_y = \frac{Q_{CE}}{K_e e} \tag{9-30}$$

where Q_{CE} = the strength of the link beam determined in accordance with Section 9.5.3.3;
K_e = the elastic stiffness of the link beam determined from the mathematical model or Eq. (9-27); and
e = the length of the link beam.

9.5.3.2.3 Nonlinear Dynamic Procedure If the NDP is used, the complete hysteretic behavior of each component shall be modeled and shall be based on experiment or an approved rational analysis procedure.

C9.5.3.2.3 Nonlinear Dynamic Procedure FEMA 274 (1997b) is a useful reference for guidelines on modeling the link beams and information regarding the hysteretic behavior of EBF components.

9.5.3.3 Strength of Eccentrically Braced Frames

9.5.3.3.1 General Component strengths shall be computed in accordance with the general requirements of Section 9.3.2 and the specific requirements of this section.

9.5.3.3.2 Linear Static and Dynamic Procedures Lower-bound compressive strength, P_{CL}, of braces in EBFs shall be calculated as for columns in accordance with Section 9.4.2.3.2 except that lower-bound yield strength, F_{yLB}, shall be used for yield strength.

Expected, Q_{CE}, and lower-bound, Q_{CL}, strengths of beams and columns shall be calculated as for FR beams and columns in Section 9.4.2.3. Strength of beams with axial load that exceeds 10% of the axial strength shall be as calculated for FR columns.

The lower-bound strength of brace connections shall be calculated in accordance with AISC 360, taking $\phi = 1.0$ and using the lower-bound yield strength, F_{yLB}, for yield strength.

The strength of the link beam shall be governed by shear, flexure, or the combination of shear and flexure. M_{CE} shall be taken as the expected moment capacity, and V_{CE} shall be taken as $0.6\ F_{ye}A_w$.

If $e \le \frac{1.6M_{CE}}{V_{CE}}$, Eq. (9-31) shall be used to compute the expected strength of the link beam:

$$Q_{CE} = V_{CE} = 0.6F_{ye}A_w \tag{9-31}$$

If $e > \frac{2.6M_{CE}}{V_{CE}}$, Eq. (9-32) shall be used to compute the expected strength of the link beam:

$$Q_{CE} = 2\frac{M_{CE}}{e} \tag{9-32}$$

Linear interpolation between Eqs. (9-31) and (9-32) shall be used for intermediate values of e.

9.5.3.3.3 Nonlinear Static Procedure Strengths for the components of EBFs shall be the same as those specified in Section 9.5.2.3.3 for the components of CBFs. In lieu of relationships derived from experiment or analysis, the load-deformation behavior of each component, as depicted by Fig. 9-1, shall be determined in accordance with Section 9.5.3.2.2.

9.5.3.3.4 Nonlinear Dynamic Procedure The complete hysteretic behavior of each component shall be determined experimentally or by other approved procedures.

9.5.3.4 Acceptance Criteria for Eccentrically Braced Frames

9.5.3.4.1 General Component acceptance criteria shall be computed in accordance with the general requirements of Section 9.3.2 and the specific requirements of this section.

Shear and flexure in link beams shall be considered deformation-controlled actions. All other actions, and actions on other EBF components, shall be considered force controlled. Compression, tension, shear, and bending actions on brace connections, including gusset plates, bolts, welds, and other connectors, shall be considered force controlled.

9.5.3.4.2 Linear Static and Dynamic Procedures Design actions shall be compared with design strengths in accordance with Section 7.5.2. The *m*-factors for steel components shall be selected from Table 9-4.

Link beams shall conform to the requirements of AISC 341 with regard to detailing. The brace connecting to a link beam, the columns, and the other components in the EBF shall be designed for 1.25 times the lesser of the link beam flexural or shear expected strength to ensure link yielding without brace or column buckling. Where the link beam is attached to the column flange with full-penetration welds, the provisions for these connections shall be the same as for FR frame full-penetration connections. *m*-factors for flexure and shear in link beams shall be taken from Table 9-4.

C9.5.3.4.2 Linear Static and Dynamic Procedures The acceptance criteria for full-penetration, welded beam-to-column connections are based on testing of typical moment-frame proportioning and span ratios.

9.5.3.4.3 Nonlinear Static and Dynamic Procedures Calculated component actions shall satisfy the requirements of Section 7.5.3. Deformation limits shall be taken from Tables 9-6 and 9-7.

9.5.3.5 Retrofit Measures Seismic retrofit measures for EBFs shall meet the requirements of Section 9.3.3 and other provisions of this standard.

C9.5.3.5 Retrofit Measures The retrofit measures described in Section C9.4.2.5 for FR moment frames and in Section C9.5.2. for concentrically braced frames (CBFs) may be effective for many beams, columns, and braces. Cover plates and/or stiffeners may be effective in retrofitting these components. The strength of the link may be increased by adding cover plates to the beam flanges, adding doubler plates or stiffeners to the web, or changing the brace configuration.

9.5.4 Buckling-Restrained Braced Frames

9.5.4.1 General A buckling-restrained braced frame (BRBF) shall be defined as a concentrically braced frame system with buckling-restrained braces (BRBs), which are composed of a structural steel core and a casing system that restrains the core from buckling. BRBF systems shall be evaluated and designed as capacity-based systems with the BRB casing system, connections, and adjoining members designed to resist the maximum forces that the steel core can develop.

C9.5.4.1 General BRBs are expected to withstand significant inelastic deformations without strength or stiffness degradation when subjected to earthquake loading. It is recommended that evaluation of BRBFs consider the rotational stiffness and deformation limitations of the gusset plate connections in series with the BRB elements. This limitation would mean that a typical bay would have beams, columns, BRB elements, and FR or PR moment-frame connections modeled at the end of the braces. Section 9.5.4 focuses on the modeling and acceptance criteria of the BRB elements; refer to Sections 9.4 and 9.5.2 for moment-frame and concentrically braced frames provisions, respectively.

9.5.4.2 Stiffness of Buckling-Restrained Braced Frames

9.5.4.2.1 Linear Static and Dynamic Procedures Braces shall be modeled with the stiffness of the yielding core segment and transition segment added in series. The transition segment should include the properties of the brace that is stiffened from the end of the core to the gusset connection. It is permitted to assume the gusset and beam–column joint as rigid relative to the brace for axial stiffness. The elastic stiffness of beams, columns, and connections shall be the same as those specified for FR or PR moment frames and CBFs.

9.5.4.2.2 Nonlinear Static Procedure If the NSP of Chapter 7 is used, the criteria of this section shall apply. The elastic component properties shall be modeled as specified in Section 9.5.4.2.1. In lieu of relationships derived from experiment or analysis, the nonlinear load-deformation behavior of braces shall be modeled as shown in Fig. 9-1 with parameters as defined in Table 9-7. The parameter Δ_y shall represent the axial deformation at the expected brace yield strength as defined by Section 9.5.4.3.2, which occurs at point B in the curve in Fig. 9-1. Refer to Table 9-7 and Section 9.5.4.3.3 for the remaining modeling parameters. The postpeak slope beyond modeling parameter *b* from Table 9-7 is permitted to match the negative yield stiffness down to a near zero residual strength. Nonlinear models for beams, columns, and connections shall be the same for FR or PR moment frames and CBFs.

9.5.4.2.3 Nonlinear Dynamic Procedure The complete hysteretic behavior of each component shall be based on experimental data or other approved methods. The use of the generalized load-deformation relation described by Fig. 9-1 and defined by Section 9.5.4.2.2 to represent the envelope relation for the analysis shall be permitted.

9.5.4.3 Strength of Buckling-Restrained Braced Frames

9.5.4.3.1 General Component strengths shall be computed in accordance with the general requirements of Section 9.3.2 and the specific requirements of this section. BRBF systems shall be evaluated and designed as capacity-based systems with the BRB casing system, connections, and adjoining members designed to resist the maximum forces that the steel core can develop. The maximum force that the steel core can develop shall include material strain-hardening effects and an adjustment to account for compression overstrength with respect to tension strength.

C9.5.4.3.1 General The compression overstrength arises because of friction and confinement that are caused by the interaction of the core and the casing system.

9.5.4.3.2 Linear Static and Dynamic Procedures The expected yield strength, Q_{CE}, shall be the net area of the core multiplied by the expected yield stress, F_{ye}. For strength and modeling parameters, F_{ye} shall be taken as the specified minimum yield stress multiplied by R_y from AISC 341. The factor R_y need not be applied if F_{ye} is established by testing.

The BRB casing system, connections, and adjoining members shall be designed to resist the maximum forces that the steel core can develop. The maximum force that the core can develop in compression shall be determined as $\beta\omega Q_{CE}$, and the maximum force that can be developed in tension as ωQ_{CE}. Where the yield stress is specified as a range, F_{ye} shall be based on the highest yield stress in the range for the determination of the maximum brace force. Factors β and ω are the compression strength adjustment factor and the strain-hardening adjustment factor, respectively, as defined in AISC 341. These factors shall be based on qualification testing, as outlined in AISC 341. Alternatively, for linear analysis, assumed values of 1.1 and 1.3 for β and ω, respectively, shall be permitted to be used if no testing is available.

Expected, Q_{CE}, and lower-bound, Q_{CL}, strengths of beams and columns shall be calculated as for FR beams and columns in Section 9.4.2.3. Strength of beams with axial load that exceeds 10% of the axial strength shall be as calculated for FR columns.

The lower-bound strength of brace connections shall be the nominal strength calculated in accordance with AISC 360, taking $\phi = 1.0$ and using the lower-bound yield strength, F_{yLB}, for yield strength.

9.5.4.3.3 Nonlinear Static Procedure In lieu of relationships derived by experiment or analysis, the complete load-deformation behavior of each component as depicted by Fig. 9-1 shall be determined in accordance with Section 9.4.2.2.2. The values for expected strength, Q_{CE}, are specified in Section 9.5.4.3.2 for linear procedures for point B. Point C on Fig. 9-1 is ωQ_{CE} for tension and $\beta\omega Q_{CE}$ for compression. Refer to Section 9.5.4.3.2 and AISC 341 to determine the compression strength adjustment factor β and the strain-hardening adjustment factor ω. Strengths of beams, columns, and connections shall be the same as in Section 9.5.2.3.3 for components of CBFs.

9.5.4.3.4 Nonlinear Dynamic Procedure The complete hysteretic behavior of each component shall be determined experimentally or by other approved procedures. The use of the generalized load-deformation relation described by Fig. 9-1 and defined by Section 9.5.4.3.3 to represent the envelope relation for the analysis shall be permitted.

9.5.4.4 Acceptance Criteria for Buckling-Restrained Braced Frames

9.5.4.4.1 General Component acceptance criteria shall be computed in accordance with the general requirements of Section 9.3.2 and the specific requirements of this section.

Axial tension and compression in braces shall be considered deformation controlled. Actions on beams and columns with nonnegligible axial load shall be considered force or deformation controlled as determined for FR moment-frame columns in Section 9.4.2.4. Compression, tension, shear, and bending actions on brace connections, including gusset plates, bolts, welds, and other connectors, shall be considered force controlled. Gusset plates shall be permitted to be considered deformation controlled if experimental testing of similarly detailed connections is available to justify such behavior.

9.5.4.4.2 Linear Static and Dynamic Procedures Design actions shall be compared with design strengths in accordance with Section 7.5.2. The *m*-factors for steel components shall be selected from Table 9-4. The *m*-values in Table 9-4 are only permitted if testing per AISC 341 is submitted. The deformation

term Δ_{bm} from AISC 341 shall be the max of 100% of the deformations at the BSE-1E or BSE-1N hazard or 65% of the deformations at the BSE-2E or BSE-2N hazard.

9.5.4.4.3 Nonlinear Static and Dynamic Procedures Calculated component actions shall satisfy the requirements of Section 7.5.3. Deformation limits shall be taken from Tables 9-6 and 9-7. The acceptance criteria and modeling parameters in Table 9-7 are only permitted if testing per AISC 341 is submitted. The deformation term Δ_{bm} from AISC 341 shall be the max of 100% of the deformations at the BSE-1E or BSE-1N hazard or 65% of the deformations at the BSE-2E or BSE-2N hazard.

9.5.4.5 Retrofit Measures for Buckling-Restrained Braced Frames Seismic retrofit measures for BRBFs shall meet the requirements of this section, Section 9.3.3, and other provisions of this standard.

In the case where additional seismic-force-resisting systems are added in series with the BRBF system to reduce the demands on the BRBF components, the relative stiffness for each component shall be incorporated into the analysis. If the BRB element not meeting the acceptance criteria is replaced with a larger capacity BRB element, the connections and adjoining members (beams and columns) shall be evaluated for the new expected brace strengths, as required in Section 9.5.4.3.

If a BRBF system is used as the retrofit system, the design shall be based on the procedures in Section 9.5.4 and AISC 341, taking $\phi = 1.0$.

C9.5.4.5 Retrofit Measures for Buckling-Restrained Braced Frames Potential retrofit measures for existing BRBF components would be to add additional seismic-force-resisting elements to reduce the demand on the existing BRBF system or to replace the BRB element. As the BRBF system is a rather new system, an example of where this may be needed would be in upgrading an existing building to a higher Performance Level than it was originally intended, for example, from Life Safety to Immediate Occupancy.

9.6 STEEL PLATE SHEAR WALLS

9.6.1 General A steel plate shear wall, with or without perforations, shall be provided with boundary members on all four sides and shall be fastened to these boundary elements. The boundary elements shall be evaluated as beams or columns.

C9.6.1 General A steel plate shear wall develops its seismic resistance through shear stress in the plate wall. Although structures with steel plate shear walls are not common, they have been used to retrofit a few essential structures where Immediate Occupancy and Operational performance of a facility are required after a large earthquake. Because of their stiffness, the steel plate shear walls attract much of the seismic shear. It is essential that the new load paths be carefully established.

The provisions for steel plate walls in this standard assume that the plates are sufficiently stiffened to prevent buckling. The design professional is referred to Timler (2000) and AISC 341 for additional information regarding the behavior and design of steel plate shear walls.

9.6.2 Stiffness of Steel Plate Shear Walls

9.6.2.1 Linear Static and Dynamic Procedures Use of a plane stress finite element with beams and columns as boundary elements to analyze a steel plate shear wall shall be permitted. The global stiffness of the wall, K_w, shall be calculated in accordance with Eq. (9-33) unless another method based on principles of mechanics is used.

$$K_w = \frac{Gat_w}{h} \tag{9-33}$$

where G = shear modulus of steel;
a = clear width of wall between vertical boundary elements;
h = clear height of wall between beams; and
t_w = thickness of steel plate shear wall.

9.6.2.2 Nonlinear Static Procedure The elastic stiffness of the load-deformation relationship for the wall shall be as specified in Section 9.6.2.1. The complete nonlinear load-deformation relationship shall be based on experiment or approved rational analysis. Alternatively, use of the generalized load-deformation relationship shown in Fig. 9-1, as specified in Section 9.4.2.2.2, shall be permitted using strength and deformation limits based on the requirements of Sections 9.6.3 and 9.6.4.

9.6.2.3 Nonlinear Dynamic Procedure The complete hysteretic behavior of each component shall be modeled by a rational procedure verified by experiment.

C9.6.2.3 Nonlinear Dynamic Procedure This procedure is not recommended in most cases.

9.6.3 Strength of Steel Plate Shear Walls

9.6.3.1 General Component strengths shall be computed in accordance with the general requirements of Section 9.3.2 and the specific requirements of this section.

9.6.3.2 Linear Static and Dynamic Procedures The expected strength of the steel plate shear wall element, Q_{CE}, shall be determined using the applicable equations of AISC 360, with $\phi = 1.0$ and the expected yield strength, F_{ye}, substituted for F_y. The wall shall be permitted to be modeled as the web of a plate girder. If stiffeners are provided to prevent buckling, they shall be spaced according to the requirements for plate girders given in AISC 360 and the expected strength of the wall shall be determined by Eq. (9-34):

$$Q_{CE} = V_{CE} = 0.6F_{ye}at_w \tag{9-34}$$

where F_{ye} = expected yield strength;
a = clear width of the wall between vertical boundary elements; and
t_w = thickness of plate wall.

In lieu of providing stiffeners, the steel plate shear wall element shall be permitted to be encased in concrete. If buckling is not prevented by the use of stiffeners, provisions for V_{CE} given in AISC 360 for plate girders shall be used to calculate the expected strength of the wall.

9.6.3.3 Nonlinear Static and Dynamic Procedures The generalized load-deformation curve shown in Fig. 9-1, as specified in Section 9.4.2.2.2, shall be used to represent the complete load-deformation behavior of the steel plate shear wall to failure unless another load-deformation relationship based on experiment or approved rational analysis verified by experiment is used. The expected strength, Q_{CE}, shall be calculated in accordance with Eq. (9-34). The yield deformation shall be calculated in accordance with Eq. (9-35):

$$\Delta_y = \frac{Q_{CE}}{K_w} \tag{9-35}$$

9.6.4 Acceptance Criteria for Steel Plate Shear Walls

9.6.4.1 Linear Static and Dynamic Procedures Design actions shall be compared with design strengths in accordance with

Section 7.5.2. The *m*-factors for steel components shall be selected from Table 9-4.

Shear behavior in steel plate shear walls shall be considered a deformation-controlled action, with acceptance criteria as provided in Table 9-4. Design restrictions for plate girder webs given in AISC 360, including those related to stiffener spacing, shall be followed.

9.6.4.2 Nonlinear Static and Dynamic Procedures Calculated component actions shall satisfy the requirements of Section 7.5.3. Deformation limits shall be taken from Tables 9-6 and 9-7.

9.6.5 Retrofit Measures for Steel Plate Shear Walls Seismic retrofit measures for steel plate shear walls shall meet the requirements of Section 9.3.3 and other provisions of this standard.

C9.6.5 Retrofit Measures for Steel Plate Shear Walls Retrofit measures may include the addition of stiffeners, encasement in concrete, or the addition of concrete or steel plate shear walls.

9.7 STEEL FRAMES WITH INFILLS

Steel frames with partial or complete infills of reinforced concrete or reinforced or unreinforced masonry shall be evaluated considering the combined stiffness of the steel frame and infill material.

The engineering properties and acceptance criteria for the infill walls shall comply with the requirements in Chapter 10 for concrete and Chapter 11 for masonry. Infill walls and frames shall be considered to resist the seismic force in composite action, considering the relative stiffness of each element, until complete failure of the walls has occurred. The interaction between the steel frame and infill shall be considered using procedures specified in Chapter 10 for concrete frames with infill. The analysis of each component shall be done in stages, considering the effects of interaction between the elements and carried through each Performance Level. At the point where the infill has been deemed to fail, as determined by the acceptance criteria specified in Chapter 10 or 11, the wall shall be removed from the analytical model. The analysis shall be resumed on the bare steel frame, taking into consideration any vertical discontinuity created by the degraded wall. At this point, the engineering properties and acceptance criteria for the frame, as specified in Section 9.4, shall apply.

C9.7 STEEL FRAMES WITH INFILLS

In many cases, infill walls are unreinforced or lightly reinforced, and their strength and ductility may be inadequate. Before the loss of the wall, the steel frame adds confining pressure to the wall and enhances its resistance. The actual effective forces on the steel frame components, however, are probably minimal. As the frame components attempt to develop force, they deform and the stiffer concrete or masonry components on the far side of the member pick up load. However, beam end connections, column splices, and steel frame connections at the foundation should be investigated for forces caused by interaction with the infill similar to procedures specified for concrete frames in Chapter 10.

The stiffness and resistance provided by concrete and/or masonry infills may be much larger than the stiffness of the steel frame acting alone with or without composite actions. Gaps or incomplete contact between the steel frame and the infill may negate some or all of this stiffness. These gaps may be between the wall and columns of the frame or between the wall and the top beam enclosing the frame. Different strength and stiffness conditions must be expected with different discontinuity types and locations. Therefore, the presence of any gaps or discontinuities between the infill walls and the frame must be determined and considered in the design and retrofit process. The resistance provided by infill walls may also be included if proper evaluation of the connection and interaction between the wall and the frame is made and if the strength, ductility, and properties of the wall are properly included.

The stiffness provided by infill masonry walls is excluded from the design and retrofit process unless integral action between the steel frame and the wall is verified. If complete or partial interaction between the wall and frame is verified, the stiffness is increased accordingly. The seismic performance of unconfined masonry walls is far inferior to that of confined masonry walls; therefore, the resistance of the attached wall can be used only if strong evidence as to its strength, ductility, and interaction with the steel frame is provided.

9.8 DIAPHRAGMS

9.8.1 Bare Metal Deck Diaphragms

9.8.1.1 General Metal deck diaphragms shall be composed of metal plate or gauge thickness steel sheets formed in a repeating pattern with ridges and valleys. Decking units shall be attached to each other by welds, crimping, or mechanical fasteners and shall be attached to the structural steel supports by welds or by mechanical fasteners. Bare metal deck diaphragms shall be permitted to resist seismic loads acting alone or in conjunction with supplementary diagonal bracing complying with the requirements of Section 9.8.4. Steel frame elements, to which bare metal deck diaphragms are attached at their boundaries, shall be considered to be the chord and collector elements.

The criteria of this section shall apply to existing diaphragms and to stiffened, strengthened, or otherwise retrofitted diaphragms. Interaction of new and existing elements of retrofitted diaphragms shall be evaluated to ensure strain compatibility. Load transfer mechanisms between new and existing diaphragm elements shall be evaluated.

C9.8.1.1 General Bare metal deck diaphragms are usually used for roofs of buildings where there are very light gravity loads other than support of roofing materials. Load transfer to frame elements that act as chords or collectors in modern frames is through shear connectors, puddle welds, screws, or shot pins.

9.8.1.2 Stiffness of Bare Metal Deck Diaphragms

9.8.1.2.1 Linear Procedures Bare metal deck diaphragms shall be classified as flexible, stiff, or rigid in accordance with Section 7.2.9. Flexibility factors for use in the analysis shall be calculated by an approved rational method.

C9.8.1.2.1 Linear Procedures Flexibility factors for various types of metal decks are available from manufacturers' catalogs. In systems for which values are not available, values can be established by interpolating between the most representative systems for which values are available. Flexibility factors for use in the analysis can also be calculated using the Steel Deck Institute *Diaphragm Design Manual* (SDI 2004).

9.8.1.2.2 Nonlinear Static Procedure Inelastic properties of diaphragms shall not be included in inelastic seismic analyses if the weak link of the diaphragm is connection failure. Procedures for developing models for inelastic response of wood diaphragms in unreinforced masonry (URM) buildings shall be permitted for use as the basis of an inelastic model of a flexible metal dia-

phragm. A strain-hardening modulus of 3% shall be used in the postelastic region.

9.8.1.3 Strength of Bare Metal Deck Diaphragms The strength of bare metal deck diaphragms shall be determined in accordance with Section 9.3.2 and the requirements of this section.

Expected strength, Q_{CE}, for bare metal deck diaphragms shall be taken as two times allowable values specified in approved codes and standards, unless a larger value is justified by test data. Alternatively, lower-bound strength shall be taken as nominal strength published in approved codes or standards, except that the strength reduction factor, ϕ, shall be taken as equal to 1.0.

Lower-bound strengths, Q_{CL}, of welded connectors shall be as specified in AWS D1.3, or other approved standard.

C9.8.1.3 Strength of Bare Metal Deck Diaphragms Capacities of steel deck diaphragms are given in International Code Council Evaluation Services (ICC-ES) reports, in manufacturers' literature, or in the publications of the SDI. Where allowable stresses are given, these may be multiplied by 2.0 in lieu of information provided by the manufacturer or other knowledgeable sources.

Connections between metal decks and steel framing commonly use puddle welds. Connection capacities are provided in ICC-ES reports, manufacturers' data, the SDI *Diaphragm Design Manual* (SDI 2004), or AWS D1.3. Other attachment systems, such as clips, are sometimes used.

9.8.1.4 Acceptance Criteria for Bare Metal Deck Diaphragms Connections of bare metal deck diaphragms shall be considered force controlled. Connection capacity shall be checked for the ability to transfer the total diaphragm reaction into the steel framing. Diaphragms that are governed by the capacity of the connections shall also be considered force controlled. Bare metal deck diaphragms not governed by the capacity of the connections shall be considered deformation controlled. The *m*-factors for shear yielding or plate buckling shall be taken from Table 9-4.

For Life Safety or lower Performance Levels, a loss of bearing support or anchorage of the deck shall not be permitted. For higher Performance Levels than Life Safety, the amount of damage to the connections shall not impair the load transfer between the diaphragm and the steel frame. Deformations shall not exceed the threshold of deflections that cause unacceptable damage to other elements, either structural or nonstructural, at the target Performance Level(s).

C9.8.1.4 Acceptance Criteria for Bare Metal Deck Diaphragms If bare metal deck diaphragm capacity is controlled by connections to frame members or panel buckling, then inelastic action and ductility are limited and the deck should be considered to be a force-controlled member.

9.8.1.5 Retrofit Measures for Bare Metal Deck Diaphragms Seismic retrofit measures for bare metal deck diaphragms shall meet the requirements of Section 9.3.3 and other provisions of this standard.

C9.8.1.5 Retrofit Measures for Bare Metal Deck Diaphragms The following measures may be effective in retrofitting bare metal deck diaphragms:

1. Adding shear connectors for transfer of stress to chord or collector elements;
2. Strengthening existing chords or collectors by the addition of new steel plates to existing frame components;
3. Adding puddle welds or other shear connectors at panel perimeters;
4. Adding diagonal steel bracing to form a horizontal truss to supplement diaphragm strength;
5. Adding structural concrete; and
6. Adding connections between deck and supporting members.

9.8.2 Metal Deck Diaphragms with Structural Concrete Topping

9.8.2.1 General Metal deck diaphragms with structural concrete topping, consisting of either a composite deck with indentations, or a noncomposite form deck and the concrete topping slab with reinforcement acting together, shall be permitted to resist diaphragm loads. The concrete fill shall be either normal or lightweight structural concrete, with reinforcing composed of wire mesh or reinforcing steel. Decking units shall be attached to each other by welds, crimping, or mechanical fasteners and shall be attached to structural steel supports by welds or by mechanical fasteners. The steel frame elements to which the topped metal deck diaphragm boundaries are attached shall be considered the chord and collector elements.

The criteria of the section shall apply to existing diaphragms and new and retrofitted diaphragms. Interaction of new and existing elements of retrofitted diaphragms shall be evaluated for strain compatibility. Load transfer mechanisms between new and existing diaphragm components shall be considered in determining the flexibility of the diaphragm.

C9.8.2.1 General Metal deck diaphragms with structural concrete topping are frequently used on floors and roofs of buildings where there are typical floor gravity loads. Concrete has structural properties that significantly add to diaphragm stiffness and strength. Concrete reinforcing ranges from light mesh reinforcement to a regular grid of small reinforcing bars (No. 3 or No. 4). Metal decking is typically composed of corrugated sheet steel from 22 gauge down to 14 gauge. Rib depths vary from 1½ to 3 in. in most cases. Attachment of the metal deck to the steel frame is usually accomplished using puddle welds at 1 to 2 ft on center. For composite behavior, shear studs are welded to the frame before the concrete is cast.

Load transfer to frame elements that act as chords or collectors in modern frames is usually through puddle welds or headed studs. In older construction where the frame is encased for fire protection, load transfer is made through the concrete-to-steel bond.

9.8.2.2 Stiffness of Metal Deck Diaphragms with Structural Concrete Topping

9.8.2.2.1 Linear Procedures For existing topped metal deck diaphragms, a rigid diaphragm assumption shall be permitted if the span-to-depth ratio is not greater than 5:1. For greater span-to-depth ratios, and in cases with plan irregularities, diaphragm flexibility shall be explicitly included in the analysis in accordance with Section 7.2.9. Diaphragm stiffness shall be calculated using an approved method with a representative concrete thickness.

C9.8.2.2.1 Linear Procedures Flexibility factors for topped metal decks are available from manufacturers' catalogs. For combinations for which values are not available, values can be established by interpolating between the most representative systems for which values are available. Flexibility factors for use in the analysis can also be calculated using the SDI *Diaphragm Design Manual* (SDI 2004).

9.8.2.2.2 Nonlinear Procedures Inelastic properties of diaphragms shall not be included in inelastic seismic analyses if the weak link in the diaphragm is connection failure. Procedures for

developing models for inelastic response of wood diaphragms in URM buildings shall be permitted for use as the basis of an inelastic model of a flexible metal deck diaphragm with structural concrete topping.

9.8.2.3 Strength of Metal Deck Diaphragms with Structural Concrete Topping Capacities of metal deck diaphragms with structural concrete topping shall be established by an approved procedure.

Alternatively, the expected strength, Q_{CE}, of topped metal deck diaphragms shall be taken as two times allowable values specified in approved codes and standards unless a larger value is justified by test data. Lower-bound strengths, Q_{CL}, of welded connectors shall be as specified in AWS D1.3 or other approved standards. Lower-bound strengths, Q_{CL}, for headed stud connectors shall be as specified in AISC 360, with $\phi = 1.0$.

C9.8.2.3 Strength of Metal Deck Diaphragms with Structural Concrete Topping Member capacities of steel deck diaphragms with structural concrete are given in manufacturers' catalogs, ICC-ES reports, or the SDI *Diaphragm Design Manual* (SDI 2004). If composite deck capacity is controlled by shear connectors, inelastic action and ductility are limited. It would be expected that there would be little or no inelastic action in concrete topped steel deck diaphragms, except in long span conditions; however, perimeter transfer mechanisms and collector forces must be considered to be sure this is the case. SDI calculation procedures or ICC-ES values with a multiplier of 2.0 should be used to bring allowable values to a strength level. Connector capacities may also be found in ICC-ES reports, manufacturers' data, or the SDI *Diaphragm Design Manual* (SDI 2004).

9.8.2.4 Acceptance Criteria for Metal Deck Diaphragms with Structural Concrete Topping Connections of metal deck diaphragms with structural concrete topping shall be considered force controlled. Connection capacity shall be checked for the ability to transfer the total diaphragm reaction into the steel framing. Diaphragms that are governed by the capacity of the connections shall also be considered force controlled. Topped metal deck diaphragms not governed by the capacity of the connections shall be considered deformation controlled. The *m*-factors for shear yielding shall be taken from Table 9-4.

For Life Safety or lower Performance Levels, a loss of bearing support or anchorage shall not be permitted. For higher Performance Levels than Life Safety, the amount of damage to the connections or cracking in concrete-filled slabs shall not impair the load transfer between the diaphragm and the steel frame. Deformations shall be limited to be below the threshold of deflections that cause damage to other elements, either structural or nonstructural, at specified Performance Levels. Acceptance criteria for collectors shall be as specified in Section 9.8.6.4.

Shear connectors for steel beams designed to act compositely with the slab shall have the capacity to transfer both diaphragm shears and composite beam shears. Where the beams are encased in concrete, use of bond between the steel and the concrete shall be permitted to transfer loads.

C9.8.2.4 Acceptance Criteria for Metal Deck Diaphragms with Structural Concrete Topping Shear failure of topped metal deck diaphragms requires cracking of the concrete or tearing of the metal deck, so *m*-factors have been set at conservative levels.

9.8.2.5 Retrofit Measures for Metal Deck Diaphragms with Structural Concrete Topping Seismic retrofit measures for metal deck diaphragms with structural concrete topping shall meet the requirements of Section 9.3.3 and other provisions of this standard.

C9.8.2.5 Retrofit Measures for Metal Deck Diaphragms with Structural Concrete Topping The following measures may be effective in retrofitting metal deck diaphragms with structural concrete topping:

1. Adding shear connectors to transfer forces to chord or collector elements;
2. Strengthening existing chords or collectors by the addition of new steel plates to existing frame components, or attaching new plates directly to the slab by embedded bolts or epoxy; and
3. Adding diagonal steel bracing to supplement diaphragm strength.

9.8.3 Metal Deck Diaphragms with Nonstructural Topping

9.8.3.1 General Metal deck diaphragms with nonstructural topping shall be evaluated as bare metal deck diaphragms, unless the strength and stiffness of the nonstructural topping are substantiated through approved test data.

C9.8.3.1 General Metal deck diaphragms with nonstructural fill are typically used on roofs of buildings where there are very small gravity loads. The fill, such as very lightweight insulating concrete (e.g., vermiculite), usually does not have usable structural properties and is most often unreinforced. Consideration of any composite action must be done with caution after extensive investigation of field conditions. Material properties, force transfer mechanisms, and other similar factors must be verified to include such composite action. Typically, the decks are composed of corrugated sheet steel from 22 gauge down to 14 gauge, and the rib depths vary from 9/16 to 3 in. in most cases.

9.8.3.2 Stiffness of Metal Deck Diaphragms with Nonstructural Topping

9.8.3.2.1 Linear Procedures The potential for composite action and modification of load distribution shall be considered if composite action results in higher demands on components of the seismic-force-resisting system. Otherwise, the composite action shall be permitted to be ignored as described in Section 9.8.3.1. Interaction of new and existing elements of strengthened diaphragms shall be evaluated by maintaining strain compatibility between the two, and the load transfer mechanisms between the new and existing diaphragm elements shall be considered in determining the flexibility of the diaphragm. Similarly, the interaction of new diaphragms with existing frames shall be evaluated, as well as the load transfer mechanisms between them.

C9.8.3.2.1 Linear Procedures Flexibility of the diaphragm depends on the strength and thickness of the topping. It may be necessary to bound the solution in some cases using both rigid and flexible diaphragm assumptions.

9.8.3.2.2 Nonlinear Procedures Inelastic response of diaphragms shall not be permitted in inelastic seismic analyses if the weak link in the diaphragm is connection failure. Procedures for developing models for inelastic response of wood diaphragms in URM buildings shall be permitted as the basis of an inelastic model of a flexible bare metal deck diaphragm with nonstructural topping.

9.8.3.3 Strength of Metal Deck Diaphragms with Nonstructural Topping Capacities of metal deck diaphragms with nonstructural topping shall be taken as specified for bare metal deck in Section 9.8.1. Capacities for welded and headed stud connectors shall be taken as specified in Section 9.8.2.3.

9.8.3.4 Acceptance Criteria for Metal Deck Diaphragms with Nonstructural Topping Connections of metal deck diaphragms with nonstructural topping to steel framing shall be considered force controlled. Connection capacity shall be checked for the ability to transfer the total diaphragm reaction into the steel framing. Diaphragms that are governed by the capacity of the connections shall also be considered force controlled. Topped metal deck diaphragms not governed by the capacity of the connections shall be considered deformation controlled. The *m*-factors for shear yielding or plate buckling shall be taken from Table 9-4.

For Life Safety or lower Performance Levels, a loss of bearing support or anchorage shall not be permitted. For higher Performance Levels than Life Safety, the amount of damage to the connections or cracking in concrete filled slabs shall not impair the load transfer mechanism between the diaphragm and the steel frame. Deformations shall be limited to be below the threshold of deflections that cause damage to other elements, either structural or nonstructural, at specified Performance Levels.

C9.8.3.4 Acceptance Criteria for Metal Deck Diaphragms with Nonstructural Topping Generally, there should be little or no inelastic action in the diaphragms, provided the connections to the framing members are adequate. SDI (2004) calculation procedures, or International Conference of Building Officials (ICBO) values with a multiplier of 2, should be used to bring capacities from allowable values to strength levels.

9.8.3.5 Retrofit Measures for Metal Deck Diaphragms with Nonstructural Topping Seismic retrofit measures for metal deck diaphragms with nonstructural topping shall meet the requirements of Section 9.3.3 and other provisions of this standard.

C9.8.3.5 Retrofit Measures for Metal Deck Diaphragms with Nonstructural Topping The following measures may be effective in retrofitting metal deck diaphragms with nonstructural topping:

1. Adding shear connectors to transfer forces to chord or collector elements;
2. Strengthening existing chords or collectors by the addition of new steel plates to existing frame components, or attaching new plates directly to the slab by embedded bolts or epoxy;
3. Adding puddle welds at panel perimeters of diaphragms;
4. Adding diagonal steel bracing to supplement diaphragm strength; and
5. Replacing nonstructural fill with structural concrete.

9.8.4 Horizontal Steel Bracing (Steel Truss Diaphragms)

9.8.4.1 General Horizontal steel bracing (steel truss diaphragms) shall be permitted to act as diaphragms independently or in conjunction with bare metal deck roofs. Where structural concrete fill is provided over the metal decking, relative rigidities between the steel truss and concrete systems shall be considered in the analysis.

The criteria of this section shall apply to existing truss diaphragms, retrofitted truss diaphragms, and new diaphragms.

Where steel truss diaphragms are added as part of a retrofit plan, interaction of new and existing elements of strengthened diaphragm systems (stiffness compatibility) shall be evaluated, and the load transfer mechanisms between new and existing diaphragm elements shall be considered in determining the flexibility of the strengthened diaphragm.

Load transfer mechanisms between new diaphragm elements and existing frames shall be considered in determining the flexibility of the diaphragm or frame system.

C9.8.4.1 General Steel truss diaphragm elements are typically found in conjunction with vertical framing systems that are of structural steel framing. Steel trusses are more common in long span situations, such as special roof structures for arenas, exposition halls, auditoriums, and industrial buildings. Diaphragms with large span-to-depth ratios may often be stiffened by the addition of steel trusses. The addition of steel trusses for diaphragms identified to be deficient may provide a proper method of enhancement.

Steel truss diaphragms may be made up of any of the various structural shapes. Often, the truss chord elements consist of wide flange shapes that also function as floor beams to support the gravity loads of the floor. For lightly loaded conditions, such as industrial metal deck roofs without concrete fill, the diagonal members may consist of threaded rod elements, which are assumed to act only in tension. For steel truss diaphragms with large loads, diagonal elements may consist of wide flange members, tubes, or other structural elements that act in both tension and compression. Truss element connections are generally concentric to provide the maximum lateral stiffness and ensure that the truss members act under pure axial load. These connections are generally similar to those of gravity-load-resisting trusses.

9.8.4.2 Stiffness of Steel Truss Diaphragms

9.8.4.2.1 Linear Procedures Steel truss diaphragm systems shall be modeled as horizontal truss elements (similar to braced steel frames) where axial stiffness controls deflections. Joints shall be permitted to be modeled as pinned except where joints provide moment resistance or where eccentricities exist at the connections. In such cases, joint rigidities shall be modeled. Flexibility of truss diaphragms shall be explicitly considered in distribution of seismic forces to vertical elements.

9.8.4.2.2 Nonlinear Procedures Inelastic models similar to those of braced steel frames shall be used for truss elements where nonlinear behavior of truss elements occurs. Elastic properties of truss diaphragms shall be permitted in the model for inelastic seismic analyses where nonlinear behavior of truss elements does not occur.

9.8.4.3 Strength of Steel Truss Diaphragms Capacities of truss diaphragm members shall be calculated as specified for steel braced frame members in Section 9.5. Lateral support of truss diaphragm members provided by metal deck, with or without concrete fill, shall be considered in evaluation of truss diaphragm capacities. Gravity load effects shall be included in the calculations for those members that support gravity loads.

9.8.4.4 Acceptance Criteria for Steel Truss Diaphragms Force transfer mechanisms between various members of the truss at the connections, and between trusses and frame elements, shall be evaluated to verify the completion of the load path.

For Life Safety or lower Performance Levels, a loss of bearing support or anchorage shall not be permitted. For higher Performance Levels than Life Safety, the amount of damage to the connections or bracing elements shall not result in the loss of the load transfer between the diaphragm and the steel frame. Deformations shall be limited to be below the threshold of deflections that cause damage to other elements, either structural or nonstructural, at specified Performance Levels.

9.8.4.4.1 Linear Procedures Linear acceptance criteria for horizontal steel truss diaphragm components shall be as specified for concentrically braced frames in Section 9.5.2.4 except that beam and column criteria need not be used. Use of *m*-factors specified for diagonal brace components, in lieu of those for beam and column components of braced frames, shall be permitted for strut and chord members in the truss.

9.8.4.4.2 Nonlinear Procedures Nonlinear acceptance criteria for horizontal steel truss diaphragm components shall be as specified for concentrically braced frames in Section 9.5.2.4 except that beam and column criteria need not be used. Use of plastic deformations specified for diagonal brace components, in lieu of those specified for beam and column components of braced frames, shall be permitted for strut and chord members in the truss.

9.8.4.5 Retrofit Measures for Steel Truss Diaphragms Seismic retrofit measures for steel truss diaphragms shall meet the requirements of Section 9.3.3 and other provisions of this standard.

C9.8.4.5 Retrofit Measures for Steel Truss Diaphragms The following measures may be effective in retrofitting steel truss diaphragms:

1. Diagonal components may be added to form additional horizontal trusses as a method of strengthening a weak existing diaphragm;
2. Existing chord components may be strengthened by the addition of shear connectors to enhance composite action;
3. Existing steel truss components may be strengthened by methods specified for braced steel frame members;
4. Truss connections may be strengthened by the addition of welds, new or enhanced plates, and bolts; and
5. Structural concrete fill may be added to act in combination with steel truss diaphragms after verifying the effects of the added weight of concrete fill.

9.8.5 Archaic Diaphragms

9.8.5.1 General Archaic diaphragms in steel buildings are those consisting of shallow brick arches that span between steel floor beams, with the arches packed tightly between the beams to provide the necessary resistance to thrust forces.

C9.8.5.1 General Archaic steel diaphragm elements are almost always found in older steel buildings in conjunction with vertical systems of structural steel framing. The brick arches were typically covered with a very low-strength concrete fill, usually unreinforced. In many instances, various archaic diaphragm systems were patented by contractors.

9.8.5.2 Stiffness of Archaic Diaphragms

9.8.5.2.1 Linear Procedures Existing archaic diaphragm systems shall be modeled as a horizontal diaphragm with equivalent thickness of brick arches and concrete fill. Modeling of the archaic diaphragm as a truss with steel beams as tension elements and arches as compression elements shall be permitted. The flexibility of archaic diaphragms shall be considered in calculating the distribution of seismic forces to vertical elements. Analysis results shall be evaluated to verify that diaphragm response remains elastic as assumed.

Interaction of new and existing elements of strengthened diaphragms shall be evaluated by checking the strain compatibility of the two in cases where new structural elements are added as part of a seismic retrofit. Load transfer mechanisms between new and existing diaphragm elements shall be considered in determining the flexibility of the strengthened diaphragm.

9.8.5.2.2 Nonlinear Procedures Archaic diaphragms shall be required to remain in the elastic range unless otherwise approved.

C9.8.5.2.2 Nonlinear Procedures Inelastic properties of archaic diaphragms should be chosen with caution for seismic analyses. For the case of archaic diaphragms, inelastic models similar to those of archaic timber diaphragms in unreinforced masonry buildings may be appropriate. Inelastic deformation limits of archaic diaphragms should be lower than those prescribed for a concrete-filled diaphragm.

9.8.5.3 Strength of Archaic Diaphragms Member capacities of archaic diaphragm components shall be permitted to be calculated, assuming that no tension capacity exists for all components except steel beam members. Gravity load effects shall be included for components of these diaphragms. Force transfer mechanisms between various members and between frame elements shall be evaluated to verify the completion of the load path.

9.8.5.4 Acceptance Criteria for Archaic Diaphragms Archaic diaphragms shall be considered force controlled. For Life Safety or lower Performance Levels, diaphragm deformations and displacements shall not lead to a loss of bearing support for the elements of the arches. For higher Performance Levels than Life Safety, the deformation caused by diagonal tension shall not result in the loss of the load transfer mechanism. Deformations shall be limited below the threshold of deflections that cause damage to other elements, either structural or nonstructural, at specified Performance Levels. These values shall be established in conjunction with those for steel frames.

9.8.5.5 Retrofit Measures for Archaic Diaphragms Seismic retrofit measures for archaic diaphragms shall meet the requirements of Section 9.3.3 and other provisions of this standard.

C9.8.5.5 Retrofit Measures for Archaic Diaphragms The following measures may be effective in retrofitting archaic diaphragms:

1. Adding diagonal members to form a horizontal truss;
2. Strengthening existing steel members by adding shear connectors to enhance composite action; and
3. Removing weak concrete fill and replacing it with a structural concrete topping slab after verifying the effects of the added weight of concrete fill.

9.8.6 Chord and Collector Elements

9.8.6.1 General Steel framing that supports the diaphragm shall be permitted as diaphragm chord and collector elements. Where structural concrete is present, additional slab reinforcing shall be permitted to act as the chord or collector for tensile loads while the slab carries chord or collector compression. Where the steel framing acts as a chord or collector, it shall be attached to the deck with spot welds or by mechanical fasteners.

C9.8.6.1 General Where reinforcing acts as the chord or collector, load transfer occurs through bond between the reinforcing bars and the concrete.

9.8.6.2 Stiffness of Chord and Collector Elements Modeling assumptions specified for equivalent steel frame members in this chapter shall be used for chord and collector elements.

9.8.6.3 Strength of Chord and Collector Elements Capacities of structural steel chords and collectors shall be as specified for FR moment-frame beams and columns in Section 9.4.2.3.2.

Capacities for reinforcing steel embedded in concrete slabs and acting as chords or collectors shall be determined in accordance with the provisions of Chapter 10.

9.8.6.4 Acceptance Criteria for Chord and Collector Elements Inelastic action in chords and collectors shall be permitted if it is permitted in the diaphragm. Where such actions are permissible, chords and collectors shall be considered deformation controlled. The *m*-factors shall be taken from Table 9-4, and inelastic acceptance criteria shall be taken from FR moment-frame beam and column components in Section 9.4. Where inelastic action is not permitted, chords and collectors shall be considered force controlled components. Where chord and collector elements are force controlled, Q_{UD} need not exceed the total force that can be delivered to the component by the expected strength of the diaphragm or the vertical elements of the seismic-force-resisting system. For Life Safety or lower Performance Levels, the deformations and displacements of chord and collector components shall not result in the loss of vertical support. For higher Performance Levels than Life Safety, the deformations and displacements of chords and collectors shall not impair the load path.

Welds and connectors joining the diaphragms to the chords and collectors shall be considered force controlled. If all connections meet the acceptance criteria, the diaphragm shall be considered to prevent buckling of the chord member within the plane of the diaphragm. Where chords or collectors carry gravity loads in combination with seismic loads, they shall be checked as members with combined axial load and bending in accordance with Section 9.4.2.4.2.

9.8.6.5 Retrofit Measures for Chord and Collector Elements Seismic retrofit measures for chord and collector elements shall meet the requirements of Section 9.3.3 and other provisions of this standard.

C9.8.6.5 Retrofit Measures for Chord and Collector Elements The following measures may be effective in retrofitting chord and collector elements:

1. Strengthen the connection between diaphragms and chords or collectors;
2. Strengthen steel chords or collectors with steel plates attached directly to the slab with embedded bolts or epoxy, and strengthen slab chords or collectors with added reinforcing bars; and
3. Add chord members.

9.9 STEEL PILE FOUNDATIONS

9.9.1 General A pile shall provide strength and stiffness to the foundation either by bearing directly on soil or rock, by friction along the pile length in contact with the soil, or by a combination of these mechanisms. Foundations shall be evaluated as specified in Chapter 8. Concrete components of foundations shall conform with Chapter 10. The evaluation and design of the steel piles shall comply with the requirements of this section.

C9.9.1 General Steel piles of wide flange shape (H-piles) or structural tubes or pipes, with and without concrete infills, can be used to support foundation loads. Piles driven in groups should have a pile cap to transfer loads from the superstructure to the piles.

In poor soils or soils subject to liquefaction, bending of the piles may be the only dependable resistance to lateral loads.

9.9.2 Stiffness of Steel Pile Foundations If the pile cap is below grade, the foundation stiffness from the pile cap bearing against the soil shall be permitted to be represented by equivalent soil springs derived as specified in Chapter 8. Additional stiffness of the piles shall be permitted to be derived through bending and bearing against the soil. For piles in a group, the reduction in each pile's contribution to the total foundation stiffness and strength shall be made to account for group effects. Additional requirements for calculating the stiffness shall be as specified in Chapter 8.

9.9.3 Strength of Steel Pile Foundations Except in sites subject to liquefaction of soils, it shall be permitted to neglect buckling of portions of piles embedded in the ground. Flexural demands in piles shall be calculated either by nonlinear methods or by elastic methods for which the pile is treated as a cantilever column above a calculated point of fixity.

9.9.4 Acceptance Criteria for Steel Pile Foundations The acceptance criteria for the axial force and maximum bending moments on the pile shall be as specified for a steel column in Section 9.4.2.4.2 for linear methods and in Section 9.4.2.4.3 for nonlinear methods, where the lower-bound axial compression, expected axial tension, and flexural strengths shall be computed for an unbraced length equal to zero for those portions of piles that are embedded in nonliquefiable soils.

Connections between steel piles and pile caps shall be considered force controlled.

C9.9.4 Acceptance Criteria for Steel Pile Foundations Nonlinear methods require the use of specialized software for determining actions on the piles. FEMA 274 (1997b) is a useful reference for additional information.

9.9.5 Retrofit Measures for Steel Pile Foundations Seismic retrofit measures for steel pile foundations shall meet the requirements of Section 9.3.3 and other provisions of this standard.

C9.9.5 Retrofit Measures for Steel Pile Foundations Retrofit measures for concrete pile caps are specified in Chapter 10. Criteria for the retrofit of foundation elements are specified in Chapter 8. One method that may be effective in retrofitting steel pile foundations consists of driving additional piles near existing groups and then adding a new pile cap to increase stiffness and strength of the pile foundation. Monolithic behavior gained by connecting the new and old pile caps with epoxied dowels may also be effective. In most cases, it is not possible to retrofit the existing piles.

9.10 CAST AND WROUGHT IRON

9.10.1 General Existing components of cast and wrought iron shall be permitted to participate in resisting seismic forces in combination with concrete or masonry walls. Cast iron frames, in which beams and columns are integrally cast, shall not be permitted to resist seismic forces as primary elements of the seismic-force-resisting system. The ability of cast iron elements to resist the design displacements at the selected Seismic Hazard Level shall be evaluated.

9.10.2 Stiffness of Cast and Wrought Iron The axial and flexural stiffness of cast iron shall be calculated using elastic section properties and a modulus of elasticity, *E*, of 25,000 kip/in.^{2} unless a different value is obtained by approved testing or other methods.

9.10.3 Strength and Acceptance Criteria for Cast and Wrought Iron Axial and flexural loads on cast iron components

shall be considered to be force-controlled behaviors. Lower-bound material properties for cast iron shall be based on Table 9-2.

The lower-bound strength of a cast iron column shall be calculated as

$$Q_{CL} = P_{CL} = A_g F_{cr} \tag{9-36}$$

where A_g = gross area of column;

F_{cr} = 12 kip/in.^{2} for $l_c/r \leq 108$; or

$$= \frac{1.40 \times 10^5}{(l_c / r)^2} \text{ ksi for } l_c / r > 108.$$

Cast iron columns shall only be permitted to carry axial compression.

This page intentionally left blank

CHAPTER 10
CONCRETE

10.1 SCOPE

This chapter sets forth requirements for the seismic evaluation and retrofit of concrete components of the seismic-force-resisting system of an existing building. The requirements of this chapter apply to existing concrete components of a building system, retrofitted concrete components of a building system, and new concrete components added to an existing building system. Provisions of this chapter do not apply to concrete-encased steel composite components.

Section 10.2 specifies data collection procedures for obtaining material properties and performing condition assessments. Section 10.3 provides general analysis and design requirements for concrete components. Sections 10.4 through 10.9 provide modeling procedures, component strengths, acceptance criteria, and retrofit measures for cast-in-place and precast concrete moment frames, braced frames, and shear walls. Sections 10.10, 10.11, and 10.12 provide modeling procedures, strengths, acceptance criteria, and retrofit measures for concrete diaphragms and concrete foundation systems.

C10.1 SCOPE

The content of Sections 10.1 through 10.4 of this chapter is based on the content of ACI 369R. ACI 369R provides a normative guide for the seismic retrofit of concrete frame buildings, updated on a regular basis considering ongoing research related to the seismic performance of existing concrete buildings.

The requirements in this chapter have been developed based on the best knowledge of the seismic performance of existing concrete buildings at the time of publication. The provisions are not intended to restrict the design professional from using new information that becomes available before the issuance of the next edition of this standard. Such new information may include tests conducted to address specific building conditions or updated provisions for the seismic retrofit of concrete buildings recommended in the current edition of ACI 369R.

This chapter provides short descriptions of potential seismic retrofit measures for each concrete building system. The design professional, however, is referred to FEMA 547 (2007) for detailed information on seismic retrofit measures for concrete buildings. Repair techniques for earthquake-damaged concrete components are not included in this chapter. The design professional is referred to FEMA 306 (1998b), FEMA 307 (1998c), and FEMA 308 (1998d) for information on evaluation and repair of damaged concrete wall components.

Concrete-encased steel composite components frequently behave as overreinforced sections. This type of component behavior was not represented in the data sets used to develop the force–deformation modeling relationships and acceptance criteria in this standard. Concrete encasement is often provided for fire protection rather than for strength or stiffness and typically lacks transverse reinforcement. In some cases, the transverse reinforcement does not meet detailing requirements in AISC 360. Lack of adequate confinement may result in expansion of the core concrete, which exacerbates bond slip and, consequently, undermines the fundamental principle that plane sections remain plane.

Testing and analysis used to determine acceptance criteria for concrete-encased steel composite components should include the effect of bond slip between steel and concrete, confinement ratio, confinement reinforcement detailing, kinematics, and appropriate strain limits.

Great care should be exercised in selecting the appropriate retrofit approaches and techniques for application to historic buildings to preserve their unique characteristics.

10.2 MATERIAL PROPERTIES AND CONDITION ASSESSMENT

10.2.1 General Mechanical properties of materials shall be obtained from available drawings, specifications, and other documents for the existing building in accordance with the requirements of Section 3.2. Where these documents fail to provide adequate information to quantify material properties, such information shall be supplemented by materials testing based on requirements of Section 10.2. The condition of the concrete components of the structure shall be determined using the requirements of Section 10.2.3.

Material properties of existing concrete components shall be determined in accordance with Section 10.2.2. The use of default material properties based on historical information is permitted in accordance with Section 10.2.2.5. A condition assessment shall be conducted in accordance with Section 10.2.3. The extent of materials testing and condition assessment performed shall be used to determine the knowledge factor as specified in Section 10.2.4.

C10.2.1 General Section 10.2 identifies properties requiring consideration and provides requirements for determining building properties. Also described is the need for a thorough condition assessment and utilization of knowledge gained in analyzing component and system behavior. Personnel involved in material property quantification and condition assessment should be experienced in the proper implementation of testing practices and the interpretation of results.

The form and function of concrete buildings, concrete strength and quality, reinforcing steel strength, quality and detailing, forming techniques, and concrete placement techniques have changed over the past century. These factors and changes, as a result of deterioration and prior loading history, have a significant impact on the seismic resistance of a concrete building.

Innovations such as prestressed and precast concrete, posttensioning, and lift-slab construction have created a diverse inventory of existing concrete structures.

When modeling a concrete building, it is important to investigate local practices relative to seismic design. Specific benchmark years can be determined for the implementation of earthquake-resistant design in most locations, but caution should be exercised in assuming optimistic characteristics for any specific building. Particularly with concrete materials, the date of original building construction significantly influences seismic performance. Without deleterious conditions or materials, concrete gains compressive strength from the time it is originally cast and in place. Strengths typically exceed specified design values (28-day or similar). Early uses of concrete did not specify design strength, and low-strength concrete was common. Early use of concrete in buildings often used reinforcing steel with relatively low strength and ductility, limited continuity, and reduced bond development. Continuity between specific existing components and elements, such as beams, columns, diaphragms, and shear walls, may be particularly difficult to assess because of concrete cover and other barriers to inspection.

Properties of welded wire reinforcement for various periods of construction can be obtained from the Wire Reinforcement Institute (WRI 2009).

Documentation of the material properties and grades used in component and connection construction is invaluable and can be effectively used to reduce the amount of in-place testing required. The design professional is encouraged to research and acquire all available records from original construction, including photographs, to confirm reinforcement details shown on the plans.

Design professionals seeking further guidance on the condition assessment of existing concrete buildings should refer to the following:

- ACI 201.1R, which provides guidance on conducting a condition survey of existing concrete structures;
- ACI 364.1R, which describes the general procedures used for the evaluation of concrete structures before retrofit; and
- ACI 437R, which describes methods for strength evaluation of existing concrete buildings, including analytical and load test methods.

10.2.2 Properties of In-Place Materials and Components

10.2.2.1 Material Properties

10.2.2.1.1 General The following component and connection material properties shall be obtained for the as-built structure:

1. Concrete compressive strength; and
2. Yield and ultimate strength of conventional and prestressing reinforcing steel and metal connection hardware.

Where materials testing is required by Section 6.2, the test methods to quantify material properties shall comply with the requirements of Section 10.2.2.3. The frequency of sampling, including the minimum number of tests for property determination, shall comply with the requirements of Section 10.2.2.4.

C10.2.2.1.1 General Other material properties and conditions of interest for concrete components include

1. Tensile strength and modulus of elasticity of concrete;
2. Ductility, toughness, and fatigue properties of concrete;
3. Carbon equivalent present in the reinforcing steel; and
4. Presence of any degradation such as corrosion or deterioration of bond between concrete and reinforcement.

The extent of effort made to determine these properties depends on availability of accurate, updated construction documents and drawings; construction quality and type; accessibility; and material conditions. The analysis method selected—for example, linear static procedure (LSP) or nonlinear static procedure (NSP)—might also influence the testing scope. Concrete tensile strength and modulus of elasticity can be estimated based on the compressive strength and may not warrant the damage associated with any extra coring required.

The sample size and removal practices followed are referenced in FEMA 274 (1997b), Sections C6.3.2.3 and C6.3.2.4. ACI 228.1R provides guidance on methods to estimate the in-place strength of concrete in existing structures, whereas ACI 214.4R (2010) provides guidance on coring in existing structures and interpretation of core compressive strength test results. Generally, mechanical properties for both concrete and reinforcing steel can be established from combined core and specimen sampling at similar locations, followed by laboratory testing. Core drilling should minimize damage to the existing reinforcing steel.

10.2.2.1.2 Nominal or Specified Properties Nominal material properties, or properties specified in construction documents, shall be taken as lower-bound material properties. Corresponding expected material properties shall be calculated by multiplying lower-bound values by a factor taken from Table 10-1 to translate from lower-bound to expected values. Alternative factors shall be permitted where justified by test data.

10.2.2.2 Component Properties The following component properties and as-built conditions shall be established:

1. Cross-sectional dimensions of individual components and overall configuration of the structure;
2. Configuration of component connections, size of anchor bolts, thickness of connector material, anchorage and interconnection of embedments and the presence of bracing or stiffening components;
3. Modifications to components or overall configuration of the structure;
4. Most recent physical condition of components and connections, and the extent of any deterioration;
5. Deformations beyond those expected because of gravity loads, such as those caused by settlement or past earthquake events; and
6. Presence of other conditions that influence building performance, such as nonstructural components that may interfere with structural components during earthquake excitation.

C10.2.2.2 Component Properties Component properties may be required to properly characterize building performance in seismic analysis. The starting point for assessing component properties and condition is retrieval of available construction documents. A preliminary review should identify primary gravity- and seismic-force-resisting elements and systems and their critical components and connections. If there are no drawings of the building, the design professional should perform a

Table 10-1. Factors to Translate Lower-Bound Material Properties to Expected Strength Material Properties

Material Property	Factor
Concrete compressive strength	1.50
Reinforcing steel tensile and yield strength	1.25
Connector steel yield strength	1.50

thorough investigation of the building to identify these elements, systems, and components as described in Section 10.2.3.

10.2.2.3 Test Methods to Quantify Material Properties

10.2.2.3.1 General Destructive and nondestructive test methods used to obtain in-place mechanical properties of materials identified in Section 10.2.2.1 and component properties identified in Section 10.2.2.2 are specified in this section. Samples of concrete and reinforcing and connector steel shall be examined for physical condition as specified in Section 10.2.3.2.

When determining material properties with the removal and testing of samples for laboratory analysis, sampling shall take place in primary gravity- and seismic-force-resisting components in regions with the least stress.

Where Section 10.2.2.4.2.1 does not apply and the coefficient of variation is greater than 20%, the expected concrete strength shall not exceed the mean less one standard deviation.

10.2.2.3.2 Sampling For concrete material testing, the sampling program shall include the removal of standard cores. Core drilling shall be preceded by nondestructive location of the reinforcing steel, and core holes should be located to avoid damage to or drilling through the reinforcing steel. Core holes shall be filled with concrete or grout of comparable strength having nonshrinkage properties. If conventional reinforcing steel is tested, sampling shall include removal of local bar segments and installation of replacement spliced material to maintain continuity of the reinforcing bar for transfer of bar force unless an analysis confirms that replacement of the original components is not required.

Removal of core samples and performance of laboratory destructive testing shall be permitted to determine existing concrete strength properties. Removal of core samples shall use the procedures included in ASTM C42. Testing shall follow the procedures contained in ASTM C42, ASTM C39, and ASTM C496. Core strength shall be converted to in-place concrete compressive strength by an approved procedure, such as that included in ACI 214.4R.

Removal of bar or tendon length samples and performance of laboratory destructive testing shall be permitted to determine existing reinforcing steel strength properties. The tensile yield and ultimate strengths for reinforcing and prestressing steels shall follow the procedures included in ASTM A370. Reinforcing samples that are slightly damaged during removal are permitted to be machined to a round bar as long as the tested area is at least 70% of the gross area of the original bar. The tensile and ultimate strength of the bar obtained from the testing should be based on the net area. Prestressing materials shall meet the supplemental requirements in ASTM A416, ASTM A421, or ASTM A722, depending on material type. Properties of connector steels shall be permitted to be determined by wet and dry chemical composition tests and direct tensile and compressive strength tests as specified by ASTM A370. Where strengths of embedded connectors are required, in-place testing shall satisfy the provisions of ASTM E488.

C10.2.2.3.2 Sampling ACI 214.4R and FEMA 274 (1997b) provide further guidance on correlating concrete core strength to in-place strength and provide references for various test methods that can be used to estimate material properties. Chemical composition may be determined from retrieved samples to assess the condition of the concrete. Section C6.3.3.2 of FEMA 274 (1997b) provides references for these tests.

When concrete cores are taken, care should be taken when patching the holes. For example, a core through the thickness of a slab should have positive anchorage by roughening the surface and possibly dowels for anchorage. For that case, the holes should be filled with concrete or grout and the engineer should provide direction for filling the hole so that the added concrete or grout bonds to the substrate.

The reinforcing steel system used in the construction of a specific building is usually a common grade and strength. One grade of reinforcement is occasionally used for small-diameter bars, like those used for stirrups and hoops, and another grade for large-diameter bars, like those used for longitudinal reinforcement. In some cases, different concrete design strengths or classes are used. Historical research and industry documents contain insight on material mechanical properties used in different construction eras (Section 10.2.2.5). This information can be used with laboratory and field test data to gain confidence in in-place strength properties. Undamaged reinforcing may be reduced to a smooth bar, as long as the samples meet the requirements of ASTM A370, excluding the limitations of Annex 9. This type of reinforcing would occur in a situation where only a limited length of bar can be removed for testing.

10.2.2.4 Minimum Number of Tests Materials testing is not required if material properties are available from original construction documents that include material test records or reports. Material test records or reports shall be representative of all critical components of the building structure.

Based on Section 6.2, data collection from material tests is classified as either comprehensive or usual. The minimum number of tests for usual data collection is specified in Section 10.2.2.4.1. The minimum number of tests necessary to quantify properties by in-place testing for comprehensive data collection is specified in Section 10.2.2.4.2. If the existing gravity-load-resisting-system or seismic-force-resisting system is replaced during the retrofit process, material testing is only required to quantify properties of existing materials at new connection points.

C10.2.2.4 Minimum Number of Tests To quantify in-place properties accurately, it is essential that a minimum number of tests be conducted on primary components of the seismic-force-resisting system. The minimum number of tests is dictated by the availability of original construction data, structural system type used, desired accuracy, quality and condition of in-place materials, level of seismicity, and target Performance Level. Accessibility to the structural system may influence the testing program scope. The focus of testing should be on primary seismic-force-resisting components and specific properties for analysis. Test quantities provided in this section are minimal; the design professional should determine whether further testing is needed to evaluate as-built conditions.

Testing is generally not required on components other than those of the seismic-force-resisting system.

The design professional and subcontracted testing agency should carefully examine test results to verify that suitable sampling and testing procedures were followed and appropriate values for the analysis were selected from the data.

10.2.2.4.1 Usual Data Collection The minimum number of tests to determine concrete and reinforcing steel material properties for usual data collection shall be based on the following criteria:

1. If the specified design strength of the concrete is known, at least one core shall be taken from samples of each different concrete strength used in the construction of the building, with a minimum of three cores taken for the entire building;
2. If the specified design strength of the concrete is not known, at least one core shall be taken from each type of

seismic-force-resisting component, with a minimum of six cores taken for the entire building;

3. If the specified design strength of the reinforcing steel is known, nominal or specified material properties shall be permitted without additional testing; and
4. If the specified design strength of the reinforcing steel is not known, at least two strength test coupons of reinforcing steel shall be removed from the building for testing.

10.2.2.4.2 Comprehensive Data Collection

10.2.2.4.2.1 Coefficient of Variation Unless specified otherwise, a minimum of three tests shall be conducted to determine any property. If the coefficient of variation exceeds 20%, additional tests should be performed until the coefficient of variation is equal to or less than 20%. If additional testing does not reduce the coefficient of variation below 20%, a knowledge factor reduction per Section 10.2.4 shall be used. In determining coefficient of variation, cores shall be grouped by grades of concrete and element type. The number of tests in a single component shall be limited so as not to compromise the integrity of the component.

10.2.2.4.2.2 Concrete Materials For each concrete element type, a minimum of three core samples shall be taken and subjected to compression tests. A minimum of six total tests shall be performed on a building for concrete strength determination, subject to the limitations of this section. If varying concrete classes or grades were used in the building construction, a minimum of three samples and tests shall be performed for each class and grade. The modulus of elasticity and tensile strength shall be permitted to be estimated from the compressive strength testing data. Samples shall be taken from components, distributed throughout the building, that are critical to the structural behavior of the building.

Tests shall be performed on samples from components that are identified as damaged or degraded to quantify their condition. Test results from areas of degradation shall be compared with strength values specified in the construction documents. If test values less than the specified strength in the construction documents are found, further strength testing shall be performed to determine the cause or identify the degree of damage or degradation.

The minimum number of tests to determine compressive strength shall conform to the following criteria:

1. For concrete elements for which the specified design strength is known and test results are not available, a minimum of three core tests shall be conducted for each floor level, 400 yd^3 (306 m^3) of concrete, or 10,000 ft^2 (930 m^2) of surface area, whichever requires the most frequent testing; or
2. For concrete elements for which the design strength is unknown and test results are not available, a minimum of six core tests shall be conducted for each floor level, 400 yd^3 (306 m^3) of concrete, or 10,000 ft^2 (930 m^2) of surface area, whichever requires the most frequent testing. Where the results indicate that different classes of concrete were used, the degree of testing shall be increased to confirm class use.

Quantification of concrete strength via ultrasonics or other nondestructive test methods shall not be substituted for core sampling and laboratory testing.

C10.2.2.4.2.2 Concrete Materials ACI 214.4R (2010) provides guidance on coring in existing structures and interpretation of core compressive strength test results.

Ultrasonics and nondestructive test methods should not be substituted for core sampling and laboratory testing as they do not yield accurate strength values directly. These methods should only be used for confirmation and comparison only. Guidance for nondestructive test methods is provided in ACI 228.2R.

10.2.2.4.2.3 Conventional Reinforcing and Connector Steels Tests shall be conducted to determine both yield and ultimate strengths of reinforcing and connector steel. Connector steel is defined as additional structural steel or miscellaneous metal used to secure precast and other concrete shapes to the building structure. A minimum of three tensile tests shall be conducted on conventional reinforcing steel samples from a building for strength determination, subject to the following supplemental conditions:

1. If original construction documents defining properties exist, then at least three strength coupons shall be randomly removed from each element or component type and tested; or
2. If original construction documents defining properties are unavailable, but the approximate date of construction is known and a common material grade is confirmed, at least three strength coupons shall be randomly removed from each element or component type for every three floors of the building; and
3. If the construction date is unknown, at least six strength coupons for every three floors shall be performed.

Refer to Section 10.2.2.3.2 for replacement of sampled material.

10.2.2.4.2.4 Prestressing Steels Sampling prestressing steel tendons for laboratory testing shall only be performed on prestressed components that are part of the seismic-force-resisting system. Prestressed components in diaphragms shall be permitted to be excluded.

Tendon or prestress removal shall be avoided if possible. Any sampling of prestressing steel tendons for laboratory testing shall be done with extreme care. Determination of material properties may be possible, without tendon or prestress removal, by careful sampling of either the tendon grip or the extension beyond the anchorage, if sufficient length is available.

All sampled prestressed steel shall be replaced with new, fully connected, and stressed material and anchorage hardware, unless an analysis confirms that replacement of original components is not required.

10.2.2.5 Default Properties Default material properties to determine component strengths shall be permitted to be used in conjunction with the linear analysis procedures of Chapter 7.

Default lower-bound concrete compressive strengths are specified in Table 10-2. Default expected concrete compressive strengths shall be determined by multiplying lower-bound values by an appropriate factor selected from Table 10-1, unless another factor is justified by test data. The appropriate default compressive strength, lower-bound strength, or expected strength as specified in Section 7.5.1.3, shall be used to establish other strength and performance characteristics for the concrete as needed in the structural analysis.

Default lower-bound values for reinforcing steel are specified for various ASTM specifications and periods in Tables 10-3 or 10-4. Default expected strength values for reinforcing steel shall be determined by multiplying lower-bound values by an appropriate factor selected from Table 10-1, unless another factor is justified by test data. Where default values are assumed for existing reinforcing steel, welding or mechanical coupling of new

Table 10-2. Default Lower-Bound Compressive Strength of Structural Concrete, lb/in.^{2} (MPa)

Time Frame	Footings	Beams	Slabs	Columns	Walls
1900–1919	1000 to 2500 (7 to 17)	2000 to 3000 (14 to 21)	1500 to 3000 (10 to 21)	1500 to 3000 (10 to 21)	1000 to 2500 (7 to 17)
1920–1949	1500 to 3000 (10 to 21)	2000 to 3000 (14 to 21)	2000 to 3000 (14 to 21)	2000 to 4000 (14 to 28)	2000 to 3000 (14 to 21)
1950–1969	2500 to 3000 (17 to 21)	3000 to 4000 (21 to 28)	3000 to 4000 (21 to 28)	3000 to 6000 (21 to 40)	2500 to 4000 (17 to 28)
1970–present	3000 to 4000 (21 to 28)	3000 to 5000 (21 to 35)	3000 to 5000 (21 to 35)	3000 to 10,000 (21 to 70)	3000 to 5000 (21 to 35)

Table 10-3. Default Lower-Bound Tensile and Yield Properties of Reinforcing Steel for Various Periods

		Structural[a]	Intermediate[a]	Hard[a]				
	Grade	33	40	50	60	65	70	75
Year	Minimum Yield, lb/in.^{2} (MPa) Minimum Tensile, lb/in.^{2} (MPa)	33,000 (230) 55,000 (380)	40,000 (280) 70,000 (485)	50,000 (350) 80,000 (550)	60,000 (420) 90,000 (620)	65,000 (450) 75,000 (520)	70,000 (485) 80,000 (550)	75,000 (520) 100,000 (690)
1911–1959		x	x	x		x		
1959–1966		x	x	x	x	x	x	x
1966–1972			x	x	x	x	x	
1972–1974			x	x	x	x	x	
1974–1987			x	x	x	x	x	
1987–present			x	x	x	x	x	x

NOTE: An entry of "x" indicates that the grade was available in those years.
[a]The terms "structural," "intermediate," and "hard" became obsolete in 1968.

Table 10-4. Default Lower-Bound Tensile and Yield Properties of Reinforcing Steel for Various ASTM Specifications and Periods

				Structural[a]	Intermediate[a]	Hard[a]				
			ASTM Grade	33	40	50	60	65	70	75
			Minimum Yield, lb/in.^{2} (MPa) Minimum Tensile, lb/in.^{2} (MPa)	33,000 (230) 55,000 (380)	40,000 (280) 70,000 (485)	50,000 (350) 80,000 (550)	60,000 (420) 90,000 (620)	65,000 (450) 75,000 (520)	70,000 (485) 80,000 (550)	75,000 (520) 100,000 (690)
ASTM Designation[b]	Steel Type	Year Range								
A15 (withdrawn)	Billet	1911–1966		x	x	x				
A16 (withdrawn)	Rail[c]	1913–1966				x				
A61 (withdrawn)	Rail[c]	1963–1966					x			
A160 (withdrawn)	Axle	1936–1964		x	x	x				
A160 (withdrawn)	Axle	1965–1966		x	x	x	x			
A185	WWR	1936–present						x		
A408 (withdrawn)	Billet	1957–1966		x	x	x				
A431	Billet	1959–1966								x
A432 (withdrawn)	Billet	1959–1966					x			
A497	WWR	1964–present							x	
A615/A615M (2003c)	Billet	1968–1972			x		x			x
A615/A615M (2003c)	Billet	1974–1986			x		x			
A615/A615M (2003c)	Billet	1987–present			x		x			x
A616[d] (withdrawn)	Rail[c]	1968–present				x	x			
A617 (withdrawn)	Axle	1968–present			x		x			
A706/ A706M[e]	Low-alloy	1974–present					x			
A955	Stainless	1996–present			x		x			x

NOTE: An entry of "x" indicates that the grade was available in those years.
[a]The terms "structural," "intermediate," and "hard" became obsolete in 1968.
[b]ASTM steel is marked with the letter "W."
[c]Rail bars are marked with the letter "R."
[d]Bars marked "s!" (ASTM A616 [withdrawn]) have supplementary requirements for bend tests.
[e]ASTM A706 has a minimum tensile strength of 80 kip/in.^{2} (550 MPa), but not less than 1.25 times the actual yield strength.

reinforcement to the existing reinforcing steel shall not be permitted.

The default lower-bound yield strength for steel connector material shall be taken as 27,000 lb/in.^{2} (186 MPa). The default expected yield strength for steel connector material shall be determined by multiplying lower-bound values by an appropriate factor selected from Table 10-1, unless another value is justified by test data.

The use of default values for prestressing steel in prestressed concrete construction shall not be permitted.

C10.2.2.5 Default Properties Default values provided in this standard are generally conservative. Whereas the strength of reinforcing steel may be fairly consistent throughout a building, the strength of concrete in a building could be highly variable, given variability in concrete mixture designs and sensitivity to water–cement ratio and curing practices. A conservative assumption based upon the field observation of the concrete compressive strength in the given range is recommended, unless a higher strength is substantiated by construction documents, test reports, or material testing. For the capacity of an element in question, the lower value within the range may be conservative. It may be appropriate to use the maximum value in a given range where determining the force-controlled actions on other components.

Until about 1920, a variety of proprietary reinforcing steels was used. Yield strengths are likely to be in the range of 33,000 to 55,000 lb/in.^{2} (230 to 380 MPa), but higher values are possible and actual yield and tensile strengths may exceed minimum values. Once commonly used to designate reinforcing steel grade, the terms "structural," "intermediate," and "hard" became obsolete in 1968. Plain and twisted square bars were occasionally used between 1900 and 1949.

Factors to convert default reinforcing steel strength to expected strength include consideration of material overstrength and strain hardening.

10.2.3 Condition Assessment

10.2.3.1 General A condition assessment of the existing building and site conditions shall be performed as specified in this section.

The condition assessment shall include the following:

1. Examination of the physical condition of primary and secondary components, and the presence of any degradation shall be noted;
2. Verification of the presence and configuration of components and their connections, and the continuity of load paths between components, elements, and systems;
3. A review and documentation of other conditions, including neighboring party walls and buildings, presence of nonstructural components and mass, and prior remodeling;
4. Collection of information needed to select a knowledge factor in accordance with Section 10.2.4; and
5. Confirmation of component orientation, plumbness, and physical dimensions.

C10.2.3.1 General The condition assessment also affords an opportunity to review other conditions that may influence concrete elements and systems and overall building performance. Of particular importance is the identification of other elements and components that may contribute to or impair the performance of the concrete system in question, including infills, neighboring buildings, and equipment attachments. Limitations posed by existing coverings, wall and ceiling space, infills, and other conditions shall also be defined such that prudent retrofit measures may be planned.

10.2.3.2 Scope and Procedures The scope of the condition assessment shall include critical structural components as described in the following subsections.

10.2.3.2.1 Visual Condition Assessment Direct visual inspection of accessible and representative primary components and connections shall be performed to

- Identify configuration issues;
- Determine if degradation is present;
- Establish continuity of load paths;
- Establish the need for other test methods to quantify the presence and degree of degradation; and
- Measure dimensions of existing construction to compare with available design information and reveal any permanent deformations.

A visual building inspection shall include visible portions of foundations, seismic-force-resisting members, diaphragms (slabs), and connections. As a minimum, a representative sampling of at least 20% of the components and connections shall be visually inspected at each floor level. If significant damage or degradation is found, the assessment sample of all similar-type critical components in the building shall be increased to 40% or more, as necessary, to accurately assess the performance of components and connections with degradation.

If coverings or other obstructions exist, partial visual inspection through the obstruction shall be permitted to be performed using drilled holes and a fiberscope.

C10.2.3.2.1 Visual Condition Assessment Design professionals seeking further guidance can consult ACI 201.1R, which provides a system for reporting the condition of concrete in service.

10.2.3.2.2 Comprehensive Condition Assessment Exposure is defined as local minimized removal of cover concrete and other materials to inspect reinforcing system details. All damaged concrete cover shall be replaced after inspection. The following criteria shall be used for assessing primary connections in the building for comprehensive data collection:

1. If detailed design drawings exist, exposure of at least three different primary connections shall occur, with the connection sample including different types of connections (for example, beam–column, column–foundation, and beam–diaphragm). If no deviations from the drawings exist or if consistent deviations from the drawings exist, it shall be permitted to consider the sample as being representative of installed conditions. If inconsistent deviations are noted, then at least 25% of the specific connection type shall be inspected to identify the extent of deviation; or
2. In the absence of detailed design drawings, at least three connections of each primary connection type shall be exposed for inspection. If common detailing among the three connections is observed, it shall be permitted to consider this condition as representative of installed conditions. If variations are observed among like connections, additional connections shall be inspected until an accurate understanding of building construction is gained.

10.2.3.2.3 Additional Testing If additional destructive and nondestructive testing is required to determine the degree of damage or presence of deterioration, or to understand the internal condition and quality of concrete, approved test methods shall be used.

C10.2.3.2.3 Additional Testing The physical condition of components and connectors affects their performance. The need to

accurately identify the physical condition may dictate the need for certain additional destructive and nondestructive test methods. Such methods may be used to determine the degree of damage or presence of deterioration and to improve understanding of the internal condition and concrete quality. Further guidelines and procedures for destructive and nondestructive tests that may be used in the condition assessment are provided in ACI 228.1R, ACI 228.2R, FEMA 274 (1997b) (Section C6.3.3.2), and FEMA 306 (1998b) (Section 3.8).

The nondestructive examination (NDE) methods having the greatest use and applicability to condition assessment are listed below:

- Surface NDE methods include infrared thermography, delamination sounding, surface hardness measurement, and crack mapping. These methods may be used to find surface degradation in components such as service-induced cracks, corrosion, and construction defects;
- Volumetric NDE methods, including radiography and ultrasonics, may be used to identify the presence of internal discontinuities and loss of section. Impact-echo ultrasonics is particularly useful because of ease of implementation and proven capability in concrete;
- On-line monitoring using acoustic emissions, strain gauges, in-place static or dynamic load tests, and ambient vibration tests may be used to assess structural condition and performance. Monitoring is used to determine if active degradation or deformations are occurring, whereas nondestructive load testing provides direct insight on load-carrying capacity;
- Electromagnetic methods using a pachometer or radiography may be used to locate, size, or perform an initial assessment of reinforcing steel. Further assessment of suspected corrosion activity should use electrical half-cell potential and resistivity measurements; and
- Lift-off testing (assuming original design and installation data are available), or another nondestructive method such as the "coring stress relief" specified in ASCE/SEI 11, may be used where absolutely essential to determine the level of prestress remaining in an unbonded prestress system.

10.2.3.3 Basis for the Mathematical Building Model Results of the condition assessment shall be used to quantify the following items needed to create the mathematical building model:

1. Component section properties and dimensions;
2. Component configuration and the presence of any eccentricities or permanent deformation;
3. Connection configuration and the presence of any eccentricities;
4. Presence and effect of alterations to the structural system since original construction; and
5. Interaction of nonstructural components and their involvement in seismic force resistance.

All deviations between available construction records and as-built conditions obtained from visual inspection shall be accounted for in the structural analysis.

Unless concrete cracking, reinforcement corrosion, or other mechanisms of degradation are observed in the condition assessment as the cause for damage or reduced capacity, the cross-sectional area and other sectional properties shall be assumed to be those from the design drawings after adjustment for as-built conditions. If some sectional material loss has occurred, the loss shall be quantified by direct measurement and sectional properties reduced accordingly using the principles of structural mechanics.

10.2.4 Knowledge Factor A knowledge factor (κ) for computation of concrete component acceptance criteria shall be selected in accordance with Section 6.2.4 with additional requirements specific to concrete components. A knowledge factor, κ, equal to 0.75 shall be used if any of the following criteria are met:

1. Components are found to be damaged or deteriorated during assessment, and further testing is not performed to quantify their condition or justify the use of higher values of κ;
2. Mechanical properties have a coefficient of variation exceeding 20%; and
3. Components contain archaic or proprietary material and the condition is uncertain.

10.3 GENERAL ASSUMPTIONS AND REQUIREMENTS

10.3.1 Modeling and Design

10.3.1.1 General Seismic retrofit of a concrete building involves the design of new components connected to the existing structure, seismic upgrading of existing components, or both. New components shall comply with ACI 318, except as otherwise indicated in this standard.

Original and retrofitted components of an existing building are not expected to satisfy provisions of ACI 318 but shall be assessed using the provisions of this standard. Brittle or low-ductility failure modes shall be identified as a part of the seismic evaluation.

Evaluation of demands and capacities of reinforced concrete components shall include consideration of locations along the length where seismic force and gravity loads produce maximum effects; where changes in cross section or reinforcement result in reduced strength; and where abrupt changes in cross section or reinforcement, including splices, may produce stress concentrations that result in premature failure.

C10.3.1.1 General Brittle or low-ductility failure modes typically include behavior in direct or nearly direct compression; shear in slender components and in-component connections; torsion in slender components; and reinforcement development, splicing, and anchorage. The stresses, forces, and moments acting to cause these failure modes should be determined from a limit-state analysis, considering probable resistances at locations of nonlinear action.

10.3.1.2 Stiffness Component stiffnesses shall be calculated considering shear, flexure, axial behavior, and reinforcement slip deformations. Stress state of the component, cracking extent caused by volumetric changes from temperature and shrinkage, and deformation levels under gravity loads and seismic forces shall be considered.

C10.3.1.2 Stiffness For columns with low axial loads (below approximately $0.1A_g f_c'$), deformations caused by bar slip can account for as much as 50% of the total deformations at yield. The design professional is referred to Elwood and Eberhard (2009) for further guidance regarding calculation of the effective stiffness of reinforced concrete columns that include the effects of flexure, shear, and bar slip.

10.3.1.2.1 Linear Procedures Where design actions are determined using the linear procedures of Chapter 7, component effective stiffnesses shall correspond to the secant value to the yield point of the component. Higher stiffnesses shall be permitted where it is demonstrated by analysis to be appropriate for the

Table 10-5. Effective Stiffness Values

Component	Flexural Rigidity	Shear Rigidity	Axial Rigidity
Beams—nonprestressed[a]	$0.3E_cI_g$	$0.4E_cA_w$	—
Beams—prestressed[a]	E_cI_g	$0.4E_cA_w$	—
Columns with compression caused by design gravity loads $\geq 0.5A_gf_c'$	$0.7E_cI_g$	$0.4E_cA_w$	E_cA_g
Columns with compression caused by design gravity loads $\leq 0.1A_gf_c'$ or with tension	$0.3E_cI_g$	$0.4E_cA_w$	E_cA_g (compression) E_sA_s (tension)
Beam–column joints	Refer to Section 10.4.2.2.1		E_cA_g
Flat slabs—nonprestressed	Refer to Section 10.4.4.2	$0.4E_cA_g$	—
Flat slabs—prestressed	Refer to Section 10.4.4.2	$0.4E_cA_g$	—
Walls-cracked[b]	$0.5E_cA_g$	$0.4E_cA_w$	E_cA_g (compression) E_sA_s (tension)

[a]For T-beams, I_g can be taken as twice the value of I_g of the web alone. Otherwise, I_g should be based on the effective width as defined in Section 10.3.1.3. For columns with axial compression falling between the limits provided, flexural rigidity should be determined by linear interpolation. If interpolation is not performed, the more conservative effective stiffnesses should be used.
[b]See Section 10.7.2.2.

design loading. Alternatively, effective stiffness values in Table 10-5 shall be permitted.

C10.3.1.2.1 Linear Procedures The effective flexural rigidity values in Table 10-5 for beams and columns account for the additional flexibility from reinforcement slip within the beam–column joint or foundation before yielding. The values specified for columns were determined based on a database of 221 rectangular reinforced concrete column tests with axial loads less than $0.67A_gf_c'$ and shear span–depth ratios greater than 1.4. Measured effective stiffnesses from the laboratory test data suggest that the effective flexural rigidity for low axial loads could be approximated as $0.2EI_g$; however, considering the scatter in the effective flexural rigidity and to avoid underestimating the shear demand on columns with low axial loads, $0.3EI_g$ is recommended in Table 10-5 (Elwood et al. 2007). In addition to axial load, the shear span–depth ratio of the column influences the effective flexural rigidity. A more refined estimate of the effective flexural rigidity can be determined by calculating the displacement at yield caused by flexure, slip, and shear (Elwood and Eberhard 2009).

The modeling recommendations for beam–column joints (Section 10.4.2.2.1) do not include the influence of reinforcement slip. When the effective stiffness values for beams and columns from Table 10-5 are used in combination with the modeling recommendations for beam–column joints, the overall stiffness is in close agreement with results from beam–column subassembly tests (Elwood et al. 2007).

The effect of reinforcement slip can be accounted for by including rotational springs at the ends of the beam or column elements (Saatcioglu et al. 1992). If this modeling option is selected, the effective flexural rigidity of the column element should reflect only the flexibility from flexural deformations. In this case, for axial loads less than $0.3A_gf_c'$, the effective flexural rigidity can be estimated as $0.5EI_g$, with linear interpolation to the value given in Table 10-5 for axial loads greater than $0.5A_gf_c'$.

Because of low bond stress between concrete and plain reinforcement without deformations, components with plain longitudinal reinforcement and axial loads less than $0.5A_gf_c'$ may have lower effective flexural rigidity values than in Table 10-5.

10.3.1.2.2 Nonlinear Procedures Where design actions are determined using the nonlinear procedures of Chapter 7, component load-deformation response shall be represented by nonlinear load-deformation relations. Linear relations shall be permitted where nonlinear response does not occur in the component. The nonlinear load-deformation relation shall be based on experimental evidence or taken from quantities specified in Sections 10.4 through 10.12. For the nonlinear static procedure (NSP), the generalized load-deformation relation shown in Fig. 10-1 or other curves defining behavior under monotonically increasing deformation shall be permitted. For the nonlinear dynamic procedure (NDP), load-deformation relations shall define behavior under monotonically increasing lateral deformation and under multiple reversed deformation cycles as specified in Section 10.3.2.1.

The generalized load-deformation relation shown in Fig. 10-1 shall be described by linear response from A (unloaded component) to an effective yield B, then a linear response at reduced stiffness from point B to C, then sudden reduction in seismic force resistance to point D, then response at reduced resistance to E, and final loss of resistance thereafter. The slope from point A to B shall be determined according to Section 10.3.1.2.1. The slope from point B to C, ignoring effects of gravity loads acting through lateral displacements, shall be taken between zero and 10% of the initial slope, unless an alternate slope is justified by experiment or analysis. Point C shall have an ordinate equal to the strength of the component and an abscissa equal to the deformation at which significant strength degradation begins. Representation of the load-deformation relation by points A, B, and C only (rather than all points A–E) shall be permitted if the calculated response does not exceed point C. Numerical values for the points identified in Fig. 10-1 shall be as specified in Sections 10.4.2.2.2 for beams, columns, and joints; 10.4.3.2.2 for post-tensioned beams; 10.4.4.2.2 for slab–column connections; and 10.7.2.2 for shear walls, wall segments, and coupling beams. Other load-deformation relations shall be permitted if justified by experimental evidence or analysis.

C10.3.1.2.2 Nonlinear Procedures Typically, the response shown in Fig. 10-1 is associated with flexural response or tension response. In this case, the resistance at $Q/Q_y = 1.0$ is the yield value, and subsequent strain hardening accommodates strain hardening in the load-deformation relation as the member is deformed toward the expected strength. Where the response shown in Fig. 10-1 is associated with compression, the resistance at $Q/Q_y = 1.0$ typically is the value where concrete begins to spall, and strain hardening in well confined sections may be associated with strain hardening of the longitudinal reinforcement and an increase in strength from the confinement of concrete. Where the response shown in Fig. 10-1 is associated with

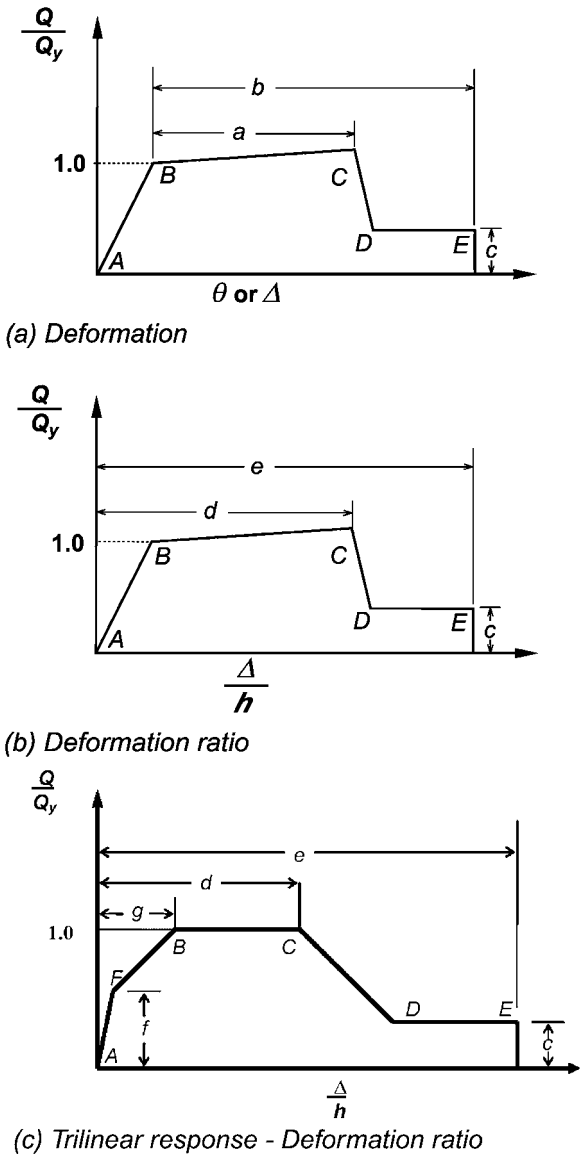

FIG. 10-1. Generalized Force-Deformation Relation for Concrete Elements or Components

shear, the resistance at $Q/Q_y = 1.0$ typically is the value at which the design shear strength is reached and, typically, no strain hardening follows.

The deformations used for the load-deformation relation of Fig. 10-1 shall be defined in one of two ways, as follows:

Deformation, or Type I: In this curve, deformations are expressed directly using terms such as strain, curvature, rotation, or elongation. The parameters *a* and *b* refer to deformation portions that occur after yield, or plastic deformation. The parameter *c* is the reduced resistance after the sudden reduction from C to D. Parameters *a*, *b*, and *c* are defined numerically in various tables in this chapter. Alternatively, parameters *a*, *b*, and *c* can be determined directly by analytical procedures justified by experimental evidence.

Deformation Ratio, or Type II: In this curve, deformations are expressed in terms such as shear angle and tangential drift ratio. The parameters *d* and *e* refer to total deformations measured from the origin. Parameters *c*, *d*, and *e* are defined numerically in various tables in this chapter. Alternatively, parameters *c*, *d*, and *e* can be determined directly by analytical procedures justified by experimental evidence.

Provisions for determining alternative modeling parameters and acceptance criteria based on experimental evidence are given in Section 7.6.

Displacement demands determined from nonlinear dynamic analysis are sensitive to the rate of strength degradation included in the structural model. Unless there is experimental evidence of sudden strength loss for a particular component under consideration, the use of a model with a sudden strength loss from point C to D in Fig. 10-1 can result in overestimation of the drift demands for a structural system and individual components. A more realistic model for many concrete components would have a linear degradation in resistance from point C to E.

Strength loss that occurs within a single cycle can result in dynamic instability of the structure, whereas strength loss that occurs between cycles is unlikely to cause such instability. Fig. 10-1 does not distinguish between these types of strength degradation and may not accurately predict the displacement demands if the two forms of strength degradation are not properly considered.

10.3.1.3 Flanged Construction In beams consisting of a web and flange that act integrally, the combined stiffness and strength for flexural and axial loading shall be calculated considering a width of effective flange on each side of the web equal to the smallest of

1. The provided flange width;
2. Eight times the flange thickness;
3. Half the distance to the next web; or
4. One-fifth of the beam span length.

Where the flange is in compression, the concrete and reinforcement within the effective width shall be considered effective in resisting flexure and axial load. Where the flange is in tension, longitudinal reinforcement within the effective width of the flange and developed beyond the critical section shall be considered fully effective for resisting flexural and axial loads. The portion of the flange extending beyond the width of the web shall be assumed ineffective in resisting shear.

In walls, effective flange width should be computed using Chapter 21 of ACI 318.

10.3.2 Strength and Deformability

10.3.2.1 General Actions in a structure shall be classified as being either deformation controlled or force controlled. Deformation-controlled actions are defined by the designation of linear and nonlinear acceptance criteria in Tables 10-7 through 10-10 and 10-13 through 10-22. Where linear and nonlinear acceptance criteria are not specified in the tables, actions shall be taken as force controlled unless component testing is performed in accordance with Section 7.6. Design strengths for deformation-controlled and force-controlled actions shall be calculated in accordance with Sections 10.3.2.2 and 10.3.2.3, respectively.

Components shall be classified as having low, moderate, or high ductility demands, according to Section 10.3.2.4.

Where strength and deformation capacities are derived from test data, the tests shall be representative of proportions, details, and stress levels for the component and comply with Section 7.6.1.

The strength and deformation capacities of concrete members shall correspond to values resulting from a loading protocol involving three fully reversed cycles to the design deformation level, in addition to similar cycles to lesser deformation levels,

unless a larger or smaller number of deformation cycles is determined considering earthquake duration and dynamic properties of the structure.

C10.3.2.1 General In this standard, actions are classified as either deformation controlled or force controlled. Actions are considered to be deformation controlled where the component behavior is well documented by test results. Where linear or nonlinear acceptance criteria are tabulated in this chapter, the committee has judged the action to be deformation controlled and expected material properties should be used. Where such acceptance criteria are not specified, the action should be assumed force controlled, thereby requiring the use of lower-bound material properties, or the design professional may opt to perform testing to validate the classification of deformation controlled. Section 7.6 provides guidance on procedures to be followed during testing, and Section 7.5.1.2 provides a methodology based on the test data to distinguish force-controlled from deformation-controlled actions. Further guidance on the testing of moment-frame components can be found in ACI 374.1.

In some cases, including short-period buildings and those subjected to a long-duration design earthquake, a building may be expected to be subjected to additional cycles to the design deformation levels beyond the three cycles recommended in Section 10.3.2.1. The increased number of cycles may lead to reductions in resistance and deformation capacity. The effects on strength and deformation capacity of additional deformation cycles should be considered in design.

10.3.2.2 Deformation-Controlled Actions Strengths used for deformation-controlled actions shall be taken as equal to expected strengths Q_{CE} obtained experimentally or calculated using accepted principles of mechanics. Expected strength is defined as the mean maximum resistance expected over the range of deformations to which a concrete component is likely to be subjected. Where calculations are used to define expected strength, expected material properties shall be used. Unless specified in this standard, other procedures specified in ACI 318 to calculate design strengths shall be permitted, except that the strength reduction factor ϕ shall be taken equal to unity. Deformation capacities for acceptance of deformation-controlled actions calculated by nonlinear procedures shall be as specified in Sections 10.4 through 10.12. For components constructed of lightweight concrete, Q_{CE} shall be modified in accordance with ACI 318 procedures for lightweight concrete.

C10.3.2.2 Deformation-Controlled Actions Expected yield strength of reinforcing steel, as specified in Section 10.2.2.1.2, includes material overstrength considerations.

10.3.2.3 Force-Controlled Actions Strengths used for force-controlled actions shall be taken as lower-bound strengths Q_{CL}, obtained experimentally or calculated using established principles of mechanics. Lower-bound strength is defined as the mean less one standard deviation of resistance expected over the range of deformations and loading cycles to which the concrete component is likely to be subjected. Where calculations are used to define lower-bound strengths, lower-bound estimates of material properties shall be used. Unless other procedures are specified in this standard, procedures specified in ACI 318 to calculate design strengths shall be permitted, except that the strength reduction factor ϕ shall be taken equal to unity. For components constructed of lightweight concrete, Q_{CL} shall be modified in accordance with ACI 318 procedures for lightweight concrete.

10.3.2.4 Component Ductility Demand Classification Table 10-6 provides classification of component ductility demands as low, moderate, or high based on the maximum value of the demand–capacity ratio (DCR) defined in Section 7.3.1.1 for linear procedures or the calculated displacement ductility for nonlinear procedures.

Table 10-6. Component Ductility Demand Classification

Maximum Value of DCR or Displacement Ductility	Descriptor
<2	Low ductility demand
2 to 4	Moderate ductility demand
>4	High ductility demand

10.3.3 Flexure and Axial Loads Flexural strength of members with and without axial loads shall be calculated according to ACI 318 or by other demonstrated rational methods, such as sectional analysis using appropriate concrete and steel constitutive models. Deformation capacity of members with and without axial loads shall be calculated considering shear, flexure, and reinforcement slip deformations, or based on acceptance criteria given in this standard. Strengths and deformation capacities of components with monolithic flanges shall be calculated considering concrete and developed longitudinal reinforcement within the effective flange width, as defined in Section 10.3.1.3.

Strength and deformation capacities shall be determined based on the available development of longitudinal reinforcement. Where longitudinal reinforcement has embedment or development length that is insufficient for reinforcement strength development, flexural strength shall be calculated based on limiting stress capacity of the embedded bar as defined in Section 10.3.5.

Where flexural deformation capacities are calculated from basic principles of mechanics, reductions in deformation capacity caused by applied shear shall be considered. Where using analytical models for flexural deformability that do not directly consider effect of shear and design shear equals or exceeds $6\sqrt{f_c'}A_w$, lb/in.^{2} ($0.5\sqrt{f_c'}A_w$, MPa), the design value shall not exceed 80% of the value calculated using the analytical model.

For concrete columns under combined axial load and biaxial bending, the combined strength shall be evaluated considering biaxial bending. When using linear procedures, the design axial load P_{UF} shall be calculated as a force-controlled action per Section 7.5.2. The design moments M_{UD} should be calculated about each of two orthogonal axes. Combined strength shall be based on principles of mechanics with applied bending moments calculated as $M_{UDx}/(m_x\kappa)$ and $M_{UDy}/(m_y\kappa)$ about the x- and y-axes, respectively. Acceptance shall be based on the applied bending moments lying within the expected strength envelope calculated at an axial load level of P_{UF}.

C10.3.3 Flexure and Axial Loads Laboratory tests indicate that flexural deformability may be reduced as coexisting shear forces increase. As flexural ductility demands increase, shear capacity decreases, which may result in a shear failure before theoretical flexural deformation capacities are reached. Use caution where flexural deformation capacities are determined by calculation. FEMA 306 (1998b) (Section 5.2) is a resource for guidance on the interaction between shear and flexure.

The combined strength under uniaxial or biaxial bending with axial load is difficult to generalize in a closed-form solution, given the range of column section geometries encountered. For a particular class of rectangular column sections, closed-form solutions based on section capacities about the principal axes have been developed that provide excellent agreement when compared with a more generalized analysis (Hsu 1988, Furlong

et al. 2004). A circular envelope provides a poor prediction of the strength for all but circular columns. For general sections, the strength envelope should be developed based on principles of mechanics using commercially available software.

10.3.3.1 Usable Strain Limits Without confining transverse reinforcement, the maximum usable strain at the extreme concrete compression fiber shall not exceed 0.002 for components in nearly pure compression and 0.005 for other components, unless larger strains are substantiated by experimental evidence. Maximum usable compressive strains for confined concrete shall be based on experimental evidence and consider limitations posed by transverse reinforcement fracture, longitudinal reinforcement buckling, and degradation of component resistance at large deformation levels. Maximum compressive strains in longitudinal reinforcement shall not exceed 0.02, and maximum tensile strains in longitudinal reinforcement shall not exceed 0.05. Monotonic coupon test results shall not be used to determine reinforcement strain limits. If experimental evidence is used to determine strain limits, the effects of low-cycle fatigue and transverse reinforcement spacing and size shall be included in testing procedures.

C10.3.3.1 Usable Strain Limits Reinforcement tensile strain limit is based on consideration of the effects of material properties and low-cycle fatigue. Low-cycle fatigue is influenced by spacing and size of transverse reinforcement and strain history. Using extrapolated monotonic test results to develop tensile strains greater than those specified above is not recommended. California Department of Transportation (Caltrans) "Seismic Design Criteria" (Caltrans 2006) recommends an ultimate tensile strain of 0.09 for No. 10 (No. 32) bars and smaller, and 0.06 for No. 11 (No. 36) bars and larger, for ASTM A706 60 kip/in.^{2} (420 MPa) reinforcing bars. A lower bound is selected here considering the variability in materials and details typically found in existing structures.

Refer to Brown and Kunnath (2004) for incorporating the effects of low-cycle fatigue and transverse reinforcing for determining strain limits based on testing.

10.3.4 Shear and Torsion Strengths in shear and torsion shall be calculated according to ACI 318, except as modified in this standard.

Within yielding regions of components with moderate or high ductility demands, shear and torsional strength shall be calculated according to procedures for ductile components, such as the provisions in Chapter 21 of ACI 318. Within yielding regions of components with low ductility demands per Table 10-6 and outside yielding regions for all ductility demands, procedures for effective elastic response, such as the provisions in Chapter 11 of ACI 318, shall be permitted to calculate the design shear strength.

Where the longitudinal spacing of transverse reinforcement exceeds half the component effective depth measured in the direction of shear, transverse reinforcement shall be assumed not more than 50% effective in resisting shear or torsion. Where the longitudinal spacing of transverse reinforcement exceeds the component effective depth measured in the direction of shear, transverse reinforcement shall be assumed ineffective in resisting shear or torsion. For beams and columns, lap-spliced transverse reinforcement shall be assumed not more than 50% effective in regions of moderate ductility demand and ineffective in regions of high ductility demand.

Shear friction strength shall be calculated according to ACI 318, considering the expected axial load from gravity and earthquake effects. Where retrofit involves the addition of concrete requiring overhead work with dry pack, the shear friction coefficient μ shall be taken as equal to 70% of the value specified by ACI 318.

C10.3.4 Shear and Torsion The reduction in the effectiveness of transverse reinforcement in this section accounts for the limited number of ties expected to cross an inclined crack when ties are provided at large spacing. Furthermore, reduction in the effectiveness of the transverse reinforcement is needed because the widely spaced ties may not be fully developed both above and below the crack. For tie spacing equal to the effective depth of the member, it is possible to develop an inclined crack that does not cross any ties, and hence the contribution of the transverse reinforcement should be ignored.

10.3.5 Development and Splices of Reinforcement Development of straight bars, hooked bars, and lap-spliced bars shall be calculated according to the provisions of ACI 318, with the following modifications:

1. Deformed straight, hooked, and lap-spliced bars shall meet the development requirements of Chapter 12 of ACI 318, except for lap splices, which shall be the same as those for straight development of bars in tension without consideration of lap-splice classifications;
2. Where existing deformed straight bars, hooked bars, and lap-spliced bars do not meet the development requirements of (1) above, the capacity of existing reinforcement shall be calculated using Eq. (10-1):

$$f_s = 1.25\left(\frac{I_b}{I_d}\right)^{2/3} f_{yL} \tag{10-1}$$

but shall not exceed the expected or lower-bound yield strength, as applicable.

Where transverse reinforcement is distributed along the development length with spacing not exceeding one-third of the effective component depth, it shall be permitted to assume that the reinforcement retains the calculated maximum stress to high ductility demands. For larger spacings of transverse reinforcement, the developed stress shall be assumed to degrade from $1.0f_s$, at a ductility demand or DCR equal to 1.0, to $0.2f_s$ at a ductility demand or DCR equal to 2.0;

3. Strength of deformed straight, discontinuous bars embedded in concrete sections or beam–column joints, with clear cover over the embedded bar not less than $3d_b$, shall be calculated according to Eq. (10-2):

$$\begin{aligned} f_s &= \frac{2500}{d_b} I_e \le f_y \text{ (lb/in.}^2\text{ units)} \\ f_s &= \frac{17}{d_b} I_e \le f_y \text{ (MPa units)} \end{aligned} \tag{10-2}$$

where f_s is less than f_y, and the calculated stress in the bar caused by design loads equals or exceeds f_s, the maximum developed stress shall be assumed to degrade from $1.0f_s$ to $0.2f_s$ at a ductility demand or DCR equal to 2.0. In beams with short bottom bar embedments into beam–column joints, flexural strength shall be calculated considering the stress limitation of Eq. (10-2);

4. For plain straight, hooked, and lap-spliced bars, development and splice lengths shall be taken as twice the values determined in accordance with ACI 318, unless other lengths are justified by approved tests or calculations considering only the chemical bond between the bar and concrete; and

5. Doweled bars added in seismic retrofit shall be assumed to develop yield stress where all the following conditions are satisfied:
   a. Drilled holes for dowel bars are cleaned with a stiff brush that extends the length of the hole;
   b. Embedment length l_e is not less than $10d_b$ and;
   c. Minimum dowel bar spacing is not less than $4l_e$ and minimum edge distance is not less than $2l_e$.

Design values for dowel bars not satisfying these conditions shall be verified by test data. Field samples shall be obtained to ensure that design strengths are developed in accordance with Section 10.3.

C10.3.5 Development and Splices of Reinforcement Development requirements in accordance with Chapter 12 of ACI 318 are applicable to development of bars in all components. Chapter 21 of ACI 318 provides development requirements that are intended only for use in yielding components of reinforced concrete moment frames that comply with the cover and confinement provisions of Chapter 21 of ACI 318. Chapter 12 of ACI 318 permits reductions in lengths if minimum cover and confinement are present in an existing component. For additional information on development and lap splices, see Orangun et al. (1977).

Eq. (10-2), which is a modified version of the model presented by Cho and Pincheira (2006), reflects the intent of ACI code development and splice equations to develop 1.25 times the nominal bar strength, referred to in this standard as the expected yield strength. The nonlinear relation between developed stress and development length reflects the effect of increasing slip, and hence, reduced unit bond strength, for longer development lengths. Refer to Elwood et al. (2007) for more details.

For buildings constructed before 1950, the bond strength developed between reinforcing steel and concrete may be less than present-day strength. Present equations for development and splices of reinforcement account for mechanical bond from deformations present in deformed bars and chemical bond. The length required to develop plain bars is much greater than for deformed bars and more sensitive to cracking in concrete. Testing and assessment procedures for tensile lap splices and development length for plain reinforcing steel are found in Concrete Reinforcing Steel Institute (CRSI 1981) Engineering Data Report 48 (CRSI DA24).

10.3.5.1 Square Reinforcing Bars Square reinforcing bars in a building should be classified as either twisted or straight. The developed strength of twisted square bars shall be as specified for deformed bars in Section 10.3.5, using an effective diameter calculated based on the gross area of the square bar. Straight square bars shall be considered as plain bars, and the developed strength shall be as specified for plain bars (Section 10.3.5).

10.3.6 Connections to Existing Concrete Connections used to connect two or more components shall be classified according to their anchoring systems as cast-in-place or as postinstalled and shall be designed according to Appendix D of ACI 318 as modified in this section. These provisions do not apply to connections in plastic hinge zones.

C10.3.6 Connections to Existing Concrete Appendix D of ACI 318 accounts for the influence of cracking on the load capacity of connectors; however, cracking and spalling expected in plastic hinge zones is likely to be more severe than the level of damage for which Appendix D is applicable. ACI 355.2 and ACI 355.4 describe simulated seismic tests that can be used for qualification of postinstalled anchors. Such tests do not simulate the conditions expected in plastic hinge zones.

ASCE/SEI 41-06 Section 6.3.6.1 required the load capacity of anchors placed in areas where cracking is expected to be reduced by a factor of 0.5. This provision was included in FEMA 273 (1997a) for both cast-in-place and postinstalled anchors, before the introduction of ACI 318 Appendix D. Because cracking is now accounted for by Appendix D, the 0.5 factor is not required in Section 10.3.6 of this standard.

To calculate the capacity of cast-in-place and postinstalled anchors using ACI 318 Appendix D, it is necessary to know the anchor's geometry (i.e., embedment, edge distance, spacing, and anchor diameter) and material properties. Edge distance, spacing, and anchor diameter can be established from construction documents or by visual inspection. Unless known from construction documents, embedment and material properties of the anchor are more difficult to determine. Where failure of the anchor is not critical to meeting the target performance level, embedment of postinstalled anchors can be assumed equal to the minimum embedment required by manufacturer's specifications for the anchor type in question. For cast-in-place anchors, embedment can be taken as less than or equal to the minimum embedment from the original design code for an embedded bolt of the same diameter. It is recommended that where the consequence of failure of an anchor is critical to satisfying the target performance level, anchor embedment not known from construction documents is determined by nondestructive testing (e.g., ultrasonic testing).

Lower-bound properties for steel connector materials and concrete strength based on default values, construction documents, or test values can be assumed for anchor strength calculations. It is noted that direct testing of anchors can provide greater certainty and may provide higher capacities. Judgment be exercised in the use of default lower-bound material properties, because doing so may not yield a conservative estimate of anchor capacity in cases where the steel strength is determined to govern the anchor capacity, and additional requirements of ACI 318, Appendix D, for ductile behavior are waived as a result.

Not all manufacturers of postinstalled anchors publish information on the mean and the standard deviation of the ultimate anchor capacity. Older testing for existing postinstalled anchors is often reported at allowable stress design levels and may not comply with the requirements of Appendix D for simulated seismic tests. It is recommended that care and judgment be used in determining pullout strength for anchors, particularly those that are critical to satisfying the target performance level. Where necessary, in situ strengths of anchors can be obtained or verified by static testing of representative anchors. ACI 355.2 and ACI 355.4 can be used for guidance on testing.

Proper installation of postinstalled anchors is critical to their performance and should be verified in all cases.

10.3.6.1 Cast-in-Place Systems Component actions on cast-in-place connection systems, including shear forces, tension forces, bending moments, and prying actions, shall be considered force controlled. Lower-bound strength of connections shall be ultimate values as specified in Appendix D of ACI 318 with $\phi = 1.0$.

10.3.6.2 Postinstalled Anchors Component actions on postinstalled anchor connection systems shall be considered force controlled. The lower-bound capacity of postinstalled anchors shall be ultimate values, as specified in Appendix D of ACI 318 with $\phi = 1.0$, or mean less one standard deviation of ultimate values published in approved test reports.

10.3.7 Retrofit Measures Seismic retrofit measures for concrete buildings shall meet the requirements of this section and other provisions of this standard.

Retrofit measures shall include replacement or retrofit of the component or modification of the structure so that the component is no longer deficient for the selected Performance Objective. If component replacement is selected, the new component shall be designed in accordance with this standard and detailed and constructed in compliance with the applicable building code.

Retrofit measures shall be evaluated as required by this standard to ensure that the completed retrofit achieves the selected performance objective. The effects of retrofit on stiffness, strength, and deformability shall be taken into account in an analytical model of the rehabilitated structure. The compatibility of new and existing components shall be checked at displacements consistent with the selected Performance Level.

Connections required between existing and new components shall satisfy the requirements of Section 10.3.6 and other requirements of this standard.

10.4 CONCRETE MOMENT FRAMES

10.4.1 Types of Concrete Moment Frames Concrete moment frames are defined as elements composed primarily of horizontal framing components, such as beams and slabs, or both; vertical framing components, such as columns; and joints connecting horizontal and vertical framing components. To resist seismic forces, these elements act alone or in conjunction with shear walls, braced frames, or other elements.

Frames that are cast monolithically, including monolithic concrete frames created by the addition of new material, are addressed in Section 10.4. Frames addressed include reinforced concrete beam–column moment frames, posttensioned concrete beam–column moment frames, and slab–column moment frames.

The frame classifications in Sections 10.4.1.1 through 10.4.1.3 include existing construction, new construction, existing construction that has been retrofitted, frames intended as part of the seismic-force-resisting system, and frames not intended as part of the seismic-force-resisting system in the original design.

10.4.1.1 Reinforced Concrete Beam–Column Moment Frames Reinforced concrete beam–column moment frames, addressed in Section 10.4.2, are defined by the following conditions:

1. Framing components are beams with or without slabs, columns, and their connections;
2. Frames are of monolithic construction that provides for moment and shear transfer between beams and columns; and
3. Primary reinforcement in components contributing to seismic-force resistance is nonprestressed.

10.4.1.2 Posttensioned Concrete Beam–Column Moment Frames Posttensioned concrete beam–column moment frames, addressed in Section 10.4.3, are defined by the following conditions:

1. Framing components are beams (with or without slabs), columns, and their connections;
2. Frames of monolithic construction provide for moment and shear transfer between beams and columns; and
3. Primary reinforcement in beams contributing to seismic-force resistance includes posttensioned reinforcement with or without mild reinforcement.

10.4.1.3 Slab–Column Moment Frames Slab–column moment frames, addressed in Section 10.4.4, are defined by the following conditions:

1. Framing components are slabs with or without beams in the transverse direction, columns, and their connections;
2. Frames of monolithic construction provide for moment and shear transfer between slabs and columns; and
3. Primary reinforcement in slabs contributing to seismic-force resistance includes nonprestressed reinforcement, prestressed reinforcement, or both.

10.4.2 Reinforced Concrete Beam–Column Moment Frames

10.4.2.1 General The analytical model for a beam–column frame element shall represent strength, stiffness, and deformation capacity of beams, columns, beam–column joints, and other components of the frame, including connections with other elements. Potential failure in flexure, shear, and reinforcement development at any section along the component length shall be considered. Interaction with other elements, including nonstructural components, shall be included.

Analytical models representing a beam–column frame using line elements with properties concentrated at component centerlines shall be permitted. Where beam and column centerlines do not intersect, the eccentricity effects between framing centerlines shall be considered. Where the centerline of the narrower component falls within the middle third of the adjacent framing component measured transverse to the framing direction, this eccentricity need not be considered. Where larger eccentricities occur, the effect shall be represented either by reductions in effective stiffness, strength, and deformation capacity or by direct modeling of the eccentricity.

The beam–column joint in monolithic construction is the zone having horizontal dimensions equal to the column cross-sectional dimensions and vertical dimension equal to the beam depth. A wider joint is acceptable where the beam is wider than the column. The beam–column joint shall be modeled according to Section 10.4.2.2 or as justified by experimental evidence. The model of the connection between columns and foundation shall be selected based on details of the column–foundation connection and rigidity of the foundation–soil system.

Action of the slab as a diaphragm interconnecting vertical components shall be represented. Action of the slab as a composite beam flange shall be considered in developing stiffness, strength, and deformation capacities of the beam component model per Section 10.3.1.3.

Inelastic action shall be restricted to those components and actions listed in Tables 10-7, 10-8, and 10-9, except where it is demonstrated by experimental evidence and analysis that other inelastic action is acceptable for the selected performance level. Acceptance criteria are specified in Section 10.4.2.4.

C10.4.2.1 General Nonstructural components should be included in the analytical model if such elements contribute significantly to building stiffness, modify dynamic properties, or have significant impact on the behavior of adjacent structural elements. Section 7.2.3.3 suggests that nonstructural components should be included if their lateral stiffness exceeds 10% of the total initial lateral stiffness of a story. Partial infill walls and staircases are examples of nonstructural elements that can alter the behavior of adjacent concrete structural elements.

10.4.2.2 Stiffness of Reinforced Concrete Beam–Column Moment Frames

10.4.2.2.1 Linear Static and Dynamic Procedures Beams shall be modeled considering flexural and shear stiffnesses, including

Table 10-7. Modeling Parameters and Numerical Acceptance Criteria for Nonlinear Procedures—Reinforced Concrete Beams

Conditions			Modeling Parameters[a]			Acceptance Criteria[a]		
			Plastic Rotations Angle (radians)		Residual Strength Ratio	Plastic Rotations Angle (radians)		
						Performance Level		
			a	*b*	*c*	IO	LS	CP
Condition i. Beams controlled by flexure[b]								
$\frac{\rho-\rho'}{\rho_{bal}}$	Transverse reinforcement[c]	$\frac{V}{b_w d\sqrt{f_c'}}$ [d]						
≤0.0	C	≤3 (0.25)	0.025	0.05	0.2	0.010	0.025	0.05
≤0.0	C	≥6 (0.5)	0.02	0.04	0.2	0.005	0.02	0.04
≥0.5	C	≤3 (0.25)	0.02	0.03	0.2	0.005	0.02	0.03
≥0.5	C	≥6 (0.5)	0.015	0.02	0.2	0.005	0.015	0.02
≤0.0	NC	≤3 (0.25)	0.02	0.03	0.2	0.005	0.02	0.03
≤0.0	NC	≥6 (0.5)	0.01	0.015	0.2	0.0015	0.01	0.015
≥0.5	NC	≤3 (0.25)	0.01	0.015	0.2	0.005	0.01	0.015
≥0.5	NC	≥6 (0.5)	0.005	0.01	0.2	0.0015	0.005	0.01
Condition ii. Beams controlled by shear[b]								
Stirrup spacing ≤ $d/2$			0.0030	0.02	0.2	0.0015	0.01	0.02
Stirrup spacing > $d/2$			0.0030	0.01	0.2	0.0015	0.005	0.01
Condition iii. Beams controlled by inadequate development or splicing along the span[b]								
Stirrup spacing ≤ $d/2$			0.0030	0.02	0.0	0.0015	0.01	0.02
Stirrup spacing > $d/2$			0.0030	0.01	0.0	0.0015	0.005	0.01
Condition iv. Beams controlled by inadequate embedment into beam–column joint[b]								
			0.015	0.03	0.2	0.01	0.02	0.03

NOTE: f_c' in lb/in.^{2} (MPa) units.
[a]Values between those listed in the table should be determined by linear interpolation.
[b]Where more than one of conditions i, ii, iii, and iv occur for a given component, use the minimum appropriate numerical value from the table.
[c]"C" and "NC" are abbreviations for conforming and nonconforming transverse reinforcement, respectively. Transverse reinforcement is conforming if, within the flexural plastic hinge region, hoops are spaced at ≤ $d/3$, and if, for components of moderate and high ductility demand, the strength provided by the hoops (V_s) is at least 3/4 of the design shear. Otherwise, the transverse reinforcement is considered nonconforming.
[d]V is the design shear force from NSP or NDP.

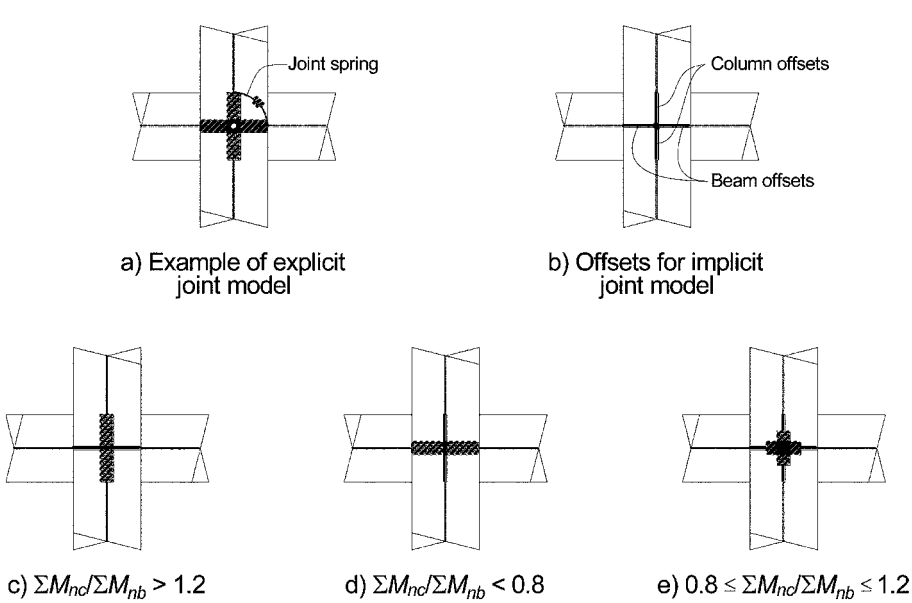

FIG. 10-2. Beam–Column Joint Modeling (Hatched Portions Indicate Rigid Element)

the effect of the slab acting as a flange in monolithic construction per Section 10.3.1.3. Columns shall be modeled considering flexural, shear, and axial stiffnesses. Refer to Section 10.3.1.2 to compute the effective stiffnesses. Where joint stiffness is not modeled explicitly, it shall be permitted to be modeled implicitly by adjusting a centerline model (Fig. 10-2):

1. For $\Sigma M_{nc}/\Sigma M_{nb} > 1.2$, column offsets are rigid and beam offsets are not;
2. For $\Sigma M_{nc}/\Sigma M_{nb} < 0.8$, beam offsets are rigid and column offsets are not; and
3. For $0.8 \le \Sigma M_{nc}/\Sigma M_{nb} \le 1.2$, half of the beam and column offsets are considered rigid.

Table 10-8. Modeling Parameters and Numerical Acceptance Criteria for Nonlinear Procedures—Reinforced Concrete Columns

Conditions			Modeling Parameters[a]			Acceptance Criteria[a]		
			Plastic Rotations Angle (radians)		Residual Strength Ratio	Plastic Rotations Angle (radians)		
						Performance Level		
			a	*b*	*c*	IO	LS	CP
Condition i.[b]								
$\frac{P}{A_g f_c'}$ [c]	$\rho = \frac{A_v}{b_w s}$							
≤0.1	≥0.006		0.035	0.060	0.2	0.005	0.045	0.060
≥0.6	≥0.006		0.010	0.010	0.0	0.003	0.009	0.010
≤0.1	=0.002		0.027	0.034	0.2	0.005	0.027	0.034
≥0.6	=0.002		0.005	0.005	0.0	0.002	0.004	0.005
Condition ii.[b]								
$\frac{P}{A_g f_c'}$ [c]	$\rho = \frac{A_v}{b_w s}$	$\frac{V}{b_w d\sqrt{f_c'}}$ [d]						
≤0.1	≥0.006	≤3 (0.25)	0.032	0.060	0.2	0.005	0.045	0.060
≤0.1	≥0.006	≥6 (0.5)	0.025	0.060	0.2	0.005	0.045	0.060
≥0.6	≥0.006	≤3 (0.25)	0.010	0.010	0.0	0.003	0.009	0.010
≥0.6	≥0.006	≥6 (0.5)	0.008	0.008	0.0	0.003	0.007	0.008
≤0.1	≤0.0005	≤3 (0.25)	0.012	0.012	0.2	0.005	0.010	0.012
≤0.1	≤0.0005	≥6 (0.5)	0.006	0.006	0.2	0.004	0.005	0.006
≥0.6	≤0.0005	≤3 (0.25)	0.004	0.004	0.0	0.002	0.003	0.004
≥0.6	≤0.0005	≥6 (0.5)	0.0	0.0	0.0	0.0	0.0	0.0
Condition iii.[b]								
$\frac{P}{A_g f_c'}$ [c]	$\rho = \frac{A_v}{b_w s}$							
≤0.1	≥0.006		0.0	0.060	0.0	0.0	0.045	0.060
≥0.6	≥0.006		0.0	0.008	0.0	0.0	0.007	0.008
≤0.1	≤0.0005		0.0	0.006	0.0	0.0	0.005	0.006
≥0.6	≤0.0005		0.0	0.0	0.0	0.0	0.0	0.0
Condition iv. Columns controlled by inadequate development or splicing along the clear height[b]								
$\frac{P}{A_g f_c'}$ [c]	$\rho = \frac{A_v}{b_w s}$							
≤0.1	≥0.006		0.0	0.060	0.4	0.0	0.045	0.060
≥0.6	≥0.006		0.0	0.008	0.4	0.0	0.007	0.008
≤0.1	≤0.0005		0.0	0.006	0.2	0.0	0.005	0.006
≥0.6	≤0.0005		0.0	0.0	0.0	0.0	0.0	0.0

NOTE: f_c' is in lb/in.^{2} (MPa) units.
[a]Values between those listed in the table should be determined by linear interpolation.
[b]Refer to Section 10.4.2.2.2 for definition of conditions i, ii, and iii. Columns are considered to be controlled by inadequate development or splices where the calculated steel stress at the splice exceeds the steel stress specified by Eq. (10-2). Where more than one of conditions i, ii, iii, and iv occurs for a given component, use the minimum appropriate numerical value from the table.
[c]Where $P > 0.7A_g f_c'$, the plastic rotation angles should be taken as zero for all performance levels unless the column has transverse reinforcement consisting of hoops with 135-degree hooks spaced at ≤ $d/3$ and the strength provided by the hoops (V_s) is at least 3/4 of the design shear. Axial load P should be based on the maximum expected axial loads caused by gravity and earthquake loads.
[d]V is the design shear force from NSP or NDP.

M_{nc} shall be calculated considering axial force from the gravity loads specified in Section 7.2.2. As this modeling approach accounts only for joint shear flexibility, stiffness values used for the beams and columns shall include the flexibility resulting from bar slip.

C10.4.2.2.1 Linear Static and Dynamic Procedures Various approaches to explicitly model beam–column joints are available in the literature (El-Metwally and Chen 1988; Ghobarah and Biddah 1999; Shin and LaFave 2004; Mitra and Lowes 2007). For simplicity of implementation in commercial structural analysis software and agreement with calibration studies performed in the development of this standard, this section defines an implicit beam–column joint modeling technique using centerline models with semirigid joint offsets. Fig. 10-2 shows an example of an explicit joint model and illustrates the implicit joint modeling approach. In the implicit joint model, only a portion of the beam and column, or both, within the geometric joint region is defined as rigid. In typical commercial software packages, this portion can range from 0, in which case the model is a true centerline model, to 1.0, where the entire joint region is rigid. Further commentary is provided in Section C10.3.1.2.1, and background material is provided in Elwood et al. (2007) and Birely et al. (2009).

10.4.2.2.2 Nonlinear Static Procedure Nonlinear load-deformation relations shall comply with Section 10.3.1.2. Nonlinear modeling parameters for beams, columns, and beam–column joints are provided in Tables 10-7, 10-8, and 10-10, respectively.

Table 10-9. Numerical Acceptance Criteria for Linear Procedures—Reinforced Concrete Columns

			m-Factors[a]				
			Performance Level				
				Component Type			
				Primary		Secondary	
Conditions			**IO**	**LS**	**CP**	**LS**	**CP**
Condition i[b]							
$\frac{P}{A_g f_c'}$[c]	$\rho = \frac{A_v}{b_w s}$						
≤0.1	≥0.006		2	2.5	3	4	5
≥0.6	≥0.006		1.25	1.8	1.9	1.9	2
≤0.1	≤0.002		2	2	2.6	2.6	3
≥0.6	≤0.002		1.1	1.1	1.2	1.2	1.4
Condition ii[b]							
$\frac{P}{A_g f_c'}$[c]	$\rho = \frac{A_v}{b_w s}$	$\frac{V}{b_w d\sqrt{f_c'}}$[d]					
≤0.1	≥0.006	≤3 (0.25)	2	2.5	3	4	5
≤0.1	≥0.006	≥6 (0.5)	2	2	2.5	4	5
≥0.6	≥0.006	≤3 (0.25)	1.25	1.8	1.9	1.9	2
≥0.6	≥0.006	≥6 (0.5)	1.25	1.5	1.6	1.6	1.8
≤0.1	≤0.0005	≤3 (0.25)	1.2	1.3	1.4	1.4	1.6
≤0.1	≤0.0005	≥6 (0.5)	1	1	1.1	1.1	1.2
≥0.6	≤0.0005	≤3 (0.25)	1	1	1.1	1.1	1.2
≥0.6	≤0.0005	≥6 (0.5)	1	1	1	1	1
Condition iii[b]							
$\frac{P}{A_g f_c'}$[c]	$\rho = \frac{A_v}{b_w s}$						
≤0.1	≥0.006		1	1	1	4	5
≥0.6	≥0.006		1	1	1	1.6	1.8
≤0.1	≤0.002		1	1	1	1.1	1.2
≥0.6	≤0.002		1	1	1	1	1
Condition iv. Columns controlled by inadequate development or splicing along the clear height[b]							
$\frac{P}{A_g f_c'}$[c]	$\rho = \frac{A_v}{b_w s}$						
≤0.1	≥0.006		1	1	1	4	5
≥0.6	≥0.006		1	1	1	1.6	1.8
≤0.1	≤0.002		1	1	1	1.1	1.2
≥0.6	≤0.002		1	1	1	1	1

NOTE: f_c' is in lb/in.^{2} (MPa) units.
[a]Values between those listed in the table should be determined by linear interpolation.
[b]Refer to Section 10.4.2.2.2 for definition of conditions i, ii, and iii. Columns are considered to be controlled by inadequate development or splices where the calculated steel stress at the splice exceeds the steel stress specified by Eq. (10-2). Where more than one of conditions i, ii, iii, and iv occurs for a given component, use the minimum appropriate numerical value from the table.
[c]Where $P > 0.7A_g f_c'$, the *m*-factor should be taken as unity for all performance levels unless the column has transverse reinforcement consisting of hoops with 135-degree hooks spaced at ≤ *d*/3 and the strength provided by the hoops (V_s) is at least 3/4 of the design shear. *P* is the design axial force in the member. Alternatively, axial loads determined based on a limit-state analysis can be used.
[d]*V* is the design shear force calculated using limit-state analysis procedures in accordance with Section 10.4.2.4.1.

Beams and columns shall be modeled using concentrated or distributed plastic hinge models. Other models whose behavior represents the behavior of reinforced concrete beam and column components subjected to seismic loading shall be permitted. The beam and column model shall be capable of representing inelastic response along the component length, except where it is shown by equilibrium that yielding is restricted to the component ends. Where nonlinear response is expected in a mode other than flexure, the model shall be established to represent such effects.

Monotonic load-deformation relations shall be established according to the generalized load-deformation relation shown in Fig. 10-1, with the exception that different relations shall be permitted where verified by experiments. The overall load-deformation relation shall be established so that maximum resistance is consistent with the design strength specifications of Sections 10.3.2 and 10.4.2.3.

For beams and columns, the generalized deformation in Fig. 10-1 is plastic hinge rotation. For beam–column joints, the generalized deformation is shear strain. Values of the generalized deformation at points B, C, and D shall be derived from experiments or rational analyses and shall take into account the interactions among flexure, axial load, and shear.

Columns not controlled by inadequate splices, condition i, ii, or iii in Table 10-8, shall be classified based on V_o per Eq. (10-3), using expected material properties, the plastic shear demand on

Table 10-10. Modeling Parameters and Numerical Acceptance Criteria for Nonlinear Procedures—Reinforced Concrete Beam–Column Joints

			Modeling Parameters[a]			Acceptance Criteria[a] Plastic Rotations Angle (radians)		
			Plastic Rotations Angle (radians)		Residual Strength Ratio	Performance Level		
Conditions			*a*	*b*	*c*	IO	LS	CP
Condition i. Interior joints (Note: For classification of joints, refer to Fig. 10-3)								
$\frac{P}{A_g f_c'}$ [b]	Transverse reinforcement[c]	$\frac{V}{V_n}$ [d]						
≤0.1	C	≤1.2	0.015	0.03	0.2	0.0	0.02	0.03
≤0.1	C	≥1.5	0.015	0.03	0.2	0.0	0.015	0.02
≥0.4	C	≤1.2	0.015	0.025	0.2	0.0	0.015	0.025
≥0.4	C	≥1.5	0.015	0.2	0.2	0.0	0.015	0.02
≤0.1	NC	≤1.2	0.005	0.2	0.2	0.0	0.015	0.02
≤0.1	NC	≥1.5	0.005	0.015	0.2	0.0	0.01	0.015
≥0.4	NC	≤1.2	0.005	0.015	0.2	0.0	0.01	0.015
≥0.4	NC	≥1.5	0.005	0.015	0.2	0.0	0.01	0.015
Condition ii. Other joints (Note: For classification for joints, refer to Fig. 10-3)								
$\frac{P}{A_g f_c'}$ [b]	Transverse reinforcement[c]	$\frac{V}{V_n}$ [d]						
≤0.1	C	≤1.2	0.01	0.02	0.2	0.0	0.015	0.02
≤0.1	C	≥1.5	0.01	0.015	0.2	0.0	0.01	0.015
≥0.4	C	≤1.2	0.01	0.02	0.2	0.0	0.015	0.02
≥0.4	C	≥1.5	0.01	0.015	0.2	0.0	0.01	0.015
≤0.1	NC	≤1.2	0.005	0.01	0.2	0.0	0.0075	0.01
≤0.1	NC	≥1.5	0.005	0.01	0.2	0.0	0.0075	0.01
≥0.4	NC	≤1.2	0.0	0.0075	0.0	0.0	0.005	0.0075
≥0.4	NC	≥1.5	0.0	0.0075	0.0	0.0	0.005	0.0075

[a]Values between those listed in the table should be determined by linear interpolation.
[b]P is the design axial force on the column above the joint calculated using limit-state analysis procedures in accordance with Section 10.4.2.4, and A_g is the gross cross-sectional area of the joint.
[c]"C" and "NC" are abbreviations for conforming and nonconforming transverse reinforcement. Joint transverse reinforcement is conforming if hoops are spaced at ≤ $h_c/2$ within the joint. Otherwise, the transverse reinforcement is considered nonconforming.
[d]V is the design shear force from NSP or NDP, and V_n is the shear strength for the joint. The shear strength should be calculated according to Section 10.4.2.3.

Table 10-11. Transverse Reinforcement Details: Condition to Be Used for Columns in Table 10-8

Shear Capacity Ratio	ACI 318 Conforming Seismic Details with 135-Degree Hooks	Closed Hoops with 90-Degree Hooks	Other (Including Lap-Spliced Transverse Reinforcement)
$V_p/V_o \le 0.6$	i[a]	ii	ii
$1.0 \ge V_p/V_o > 0.6$	ii	ii	iii
$V_p/V_o > 1.0$	iii	iii	iii

[a]To qualify for condition i, a column should have $A_v/b_w s \ge 0.002$ and $s/d \le 0.5$ within flexural plastic hinge region. Otherwise, the column is assigned to condition ii.

the column, V_p, defined as the shear demand at flexural yielding of plastic hinges, and the transverse reinforcement detailing, as shown in Table 10-11.

C10.4.2.2.2 Nonlinear Static Procedure The modeling parameters and acceptance criteria specified in Table 10-8 reflect results from research on reinforced concrete columns. Refer to Elwood et al. (2007) for a detailed description of the derivation of this table. This Section and Table 10-11 provide the criteria to determine which condition in Table 10-8 should be used to select the modeling parameters and acceptance criteria. For columns with transverse reinforcement including 135-degree hooks, the specified conditions approximately correspond to the following failure modes:

1. Condition i: Flexure failure;
2. Condition ii: Flexure-shear failure, where yielding in flexure is expected before shear failure; and
3. Condition iii: Shear failure.

For $V_p/V_o \ge 0.6$, the condition is adjusted from condition i to ii for columns with 90-degree hooks or lap-spliced transverse reinforcement to reflect the observation from experiments that poor transverse reinforcement details can result in decreased deformation capacity. For $1.0 \ge V_p/V_o > 0.6$, the condition is adjusted from condition ii to iii only for lap-spliced transverse reinforcement because the database used to evaluate the parameters for condition ii includes columns with transverse reinforcement that have 90-degree hooks. The classification of columns based on V_p/V_o as described in this Section may conservatively classify some columns with $V_p/V_o \approx 1.0$ as shear failures, although some flexural yielding may occur before shear failure. Likewise, columns with $0.6 < V_p/V_o \le 0.7$ may in fact experience flexural failures without shear degradation but have been conservatively classified in this Section as flexure-shear failures to ensure that columns are not erroneously classified in a better-performing category. Experimental evidence may be used to determine the expected failure mode and select the appropriate modeling parameters.

The acceptance criteria in Table 10-8 are determined based on the modeling parameters *a* and *b* and the requirements of Chapter 7. The modeling parameters in Table 10-8 define the plastic rotations according to Fig. 10-1. As shown in Fig. 10-1, modeling parameter *a* provides the plastic rotation at significant loss of lateral force capacity. For the purposes of determining *a* values based on test data, it was assumed that this point represented a 20% or greater reduction in the lateral force resistance from the measured peak shear capacity. For columns expected to experience flexural failures (condition i), such loss of lateral load resistance can be caused by concrete crushing, bar buckling, and other flexural damage mechanisms. For columns expected to experience shear failures, either before or after flexural yielding (conditions ii or iii), loss of lateral load resistance is commonly caused by severe diagonal cracking indicative of shear damage. Consistent with Section 7.5.1.2, modeling parameter *b* provides an estimate of the plastic rotation at the loss of gravity load support, that is, axial load failure. Experimental evidence suggests that axial load failure can occur suddenly after lateral load failure for columns with axial loads above $0.6A_g f_c'$ (Sezen and Moehle 2006 and Bayrak and Sheikh 1997). Based on this observation, the *a* and *b* parameters in Table 10-8 converge to a single value for high axial loads.

For an appropriate estimate of the deformation capacities, interpolation between the values given in Table 10-8 is required. For condition ii, the interpolation is performed on three variables in any order.

Considerable scatter exists in results from reinforced concrete columns tested to lateral force and axial force failure, making it inappropriate to specify median or mean values for the plastic rotations in Table 10-8. The goal in selecting values for parameter *a* given in Table 10-8 was to achieve a high level of safety—probability of failure P_f less than 15%—for columns that may experience shear failures, while allowing a slightly lower level of safety, $P_f < 35\%$, for columns expected to experience flexural failures. Given the potential of collapse resulting from axial load failure of individual columns, a high level of safety, $P_f < 15\%$, was desired for parameter *b*. Target limits for probabilities of failure were selected based on the judgment of the ASCE/SEI 41 Supplement 1 Ad Hoc Committee (Elwood et al, 2007) responsible for the development of Table 10-8.

To assess the degree of safety provided by Table 10-8, the tabulated values were interpolated and compared with data from laboratory tests on reinforced concrete columns appropriate for each of the conditions defined in this Section. The results are assessed and summarized in Table C10-1. Actual probabilities of failure achieved by the limits in Table 10-8 are considerably lower in many cases than the target probabilities of failure given above. Insufficient data exist to assess the probability of failure for parameter *b* for conditions i, iii, and iv; limited experimental evidence suggests, however, that the drift ratios for such columns are greater than those for flexure-shear columns (Melek and Wallace 2004 and Yoshimura et al. 2004). Therefore, the *b* values for condition ii are conservatively used for all conditions. Most laboratory tests ignore some factors that may influence the drift capacity, such as loading history; the probabilities of failure in Table C10-1 may therefore be larger if these factors are considered.

The database for modeling parameter *a* for condition i only considered columns with $A_v/b_w s \geq 0.002$ and $s/d \leq 0.5$; these limitations, therefore, have been placed on the applicability of the modeling parameters for condition i.

For columns expected to experience shear failure before flexural yielding (condition iii), the deformation at shear failure is given by the effective stiffness of the component and shear strength of the column (V_o from Eq. [10-3]). Significant plastic deformations cannot be relied on before shear failure; parameter *a*, therefore, is set to zero. This assumption is conservative for some columns because the classification method in this Section may result in some flexure-shear columns being classified as condition iii, and most have some limited plastic rotation capacity before shear failure. Except for columns with high axial loads and very light transverse reinforcement, deformations beyond shear failure are expected before axial load failure.

Elwood and Moehle (2005b) demonstrated that the drift at axial failure decreases as the following nondimensional parameter increases:

$$\alpha = \frac{P}{A_v f_{yt} d_c / s} \qquad \text{(C10-1)}$$

The database used to assess the probability of failure for parameter *b* includes columns with $\alpha \leq 33$. Use caution when applying the values from Table 10-12 to columns with $\alpha > 33$.

The probabilities of failure in Table C10-1 were determined by considering $(\theta_{p\text{meas}}/\theta_{p,\text{table}})$ as a random variable with a lognormal distribution. Eq. (C10-2) allows for the determination of the expected plastic rotation for a higher probability of failure, $P_{f\text{new}}$.

$$\theta_p(P_{f\text{new}}) = \theta_{p,\text{table}} \exp\{\zeta[\Phi^{-1}(P_{f\text{new}}) - \Phi^{-1}(P_{f\text{table}})]\} \qquad \text{(C10-2)}$$

where $\zeta = \sqrt{ln(1+\beta^2)}$, β is the coefficient of variation based on test data given in Table C10-1, $P_{f\text{table}}$ is the probability of failure given in Table C10-1, and Φ^{-1} is the inverse standard normal cumulative distribution function, with a zero mean and unit standard deviation. The inverse standard normal cumulative distribution function Φ^{-1} is found in basic statistics textbooks and is available as a function in most spreadsheet programs.

Eq. (C10-2) can be used to establish the fragility curve (Fig. C10-1) of the column, which provides the probability of failure for a given normalized plastic rotation demand, $\theta_p/\theta_{p,\text{table}}$. Note that P_f is the probability of failure for a column given a plastic rotation demand equal to θ_p. The probability of failure considering the uncertainty in the ground motion is much lower than P_f.

Databases used to assess the model conservatism consist of rectangular columns subjected to unidirectional lateral forces parallel to one face of the column. Actual columns have configurations and loadings that differ from those used in the columns database; additional scatter in results, therefore, may be antici-

Table C10-1. Database Results for Modeling Parameters in Table 10-8

Modeling Parameter	No. of Tests	Mean $(\theta_{p\text{meas}}/\theta_{p\text{table}})$	$\beta(\theta_{p\text{meas}}/\theta_{p\text{table}})$	Probability of Failure[a]
a for condition i	141	1.44	0.50	30%
a for condition ii	31	2.23	0.47	6%
a for condition iii	34	4.66	0.48	0.1%
b for condition ii	28	1.97	0.50	13%

[a]Assuming a lognormal distribution for $(\theta_{p\text{meas}}/\theta_{p\text{calc}})$.

Table 10-12. Values of γ for Joint Strength Calculation

	Value of γ				
	Condition i: Interior Joints[a]		Condition ii: Other Joints		
Transverse Reinforcement[b]	Interior Joint with Transverse Beams	Interior Joint without Transverse Beams	Exterior Joint with Transverse Beams	Exterior Joint without Transverse Beams	Knee Joint with or without Transverse Beams
C	20	15	15	12	8
NC	12	10	8	6	4

[a]For classification of joints, refer to Fig. 10-3.
[b]"C" and "NC" are abbreviations for conforming and nonconforming transverse reinforcement. Joint transverse reinforcement is conforming if hoops are spaced at $\leq h_c/2$ within the joint. Otherwise, the transverse reinforcement is considered nonconforming.

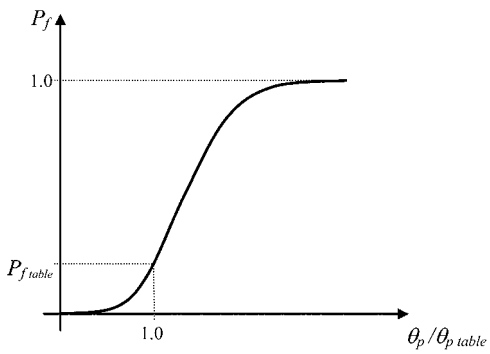

FIG. C10-1. Fragility Curve

pated. Note that bidirectional loading on corner columns is expected to result in lower drift capacities. Limited data exist, however, to assess the degree of reduction anticipated.

The design professional is referred to the following reports for further guidance regarding determination of modeling parameters and acceptance criteria for reinforced concrete columns: Lynn et al. (1996); Panagiotakos and Fardis (2001); Sezen (2002); Fardis and Biskinis (2003); Biskinis et al. (2004); Elwood and Moehle (2004, 2005a, and 2005b); and Berry and Eberhard (2005).

10.4.2.2.3 Nonlinear Dynamic Procedure For NDP, the complete hysteretic behavior of each component shall be modeled using properties verified by experimental evidence. The use of the generalized load-deformation relation described by Fig. 10-1 to represent the envelope relation for the analysis shall be permitted. Refer to Section 10.4.2.2.2 for the application of parameters for columns in Table 10-8. Unloading and reloading properties shall represent significant stiffness and strength-degradation characteristics.

10.4.2.3 Strength of Reinforced Concrete Beam–Column Moment Frames Component strengths shall be computed according to the general requirements of Section 10.3.2, as modified in this section.

The maximum component strength shall be determined considering potential failure in flexure, axial load, shear, torsion, bar development, and other actions at all points along the length of the component, under the actions of design gravity load and seismic force combinations.

10.4.2.3.1 Columns For columns, the shear strength V_n shall be permitted to be calculated using Eq. (10-3).

$$V_n = kV_o = k\left[\frac{A_v f_y d}{s} + \lambda\left(\frac{6\sqrt{f_c'}}{M/Vd}\sqrt{1+\frac{N_u}{6\sqrt{f_c'}A_g}}\right)0.8A_g\right]$$

(lb/in.^{2} units)

$$V_n = kV_o = k\left[\frac{A_v f_y d}{s} + \lambda\left(\frac{0.5\sqrt{f_c'}}{M/Vd}\sqrt{1+\frac{N_u}{0.5\sqrt{f_c'}A_g}}\right)0.8A_g\right] \quad (10\text{-}3)$$

(MPa units)

in which $k = 1.0$ in regions where displacement ductility demand is less than or equal to 2, 0.7 in regions where displacement ductility is greater than or equal to 6, and varies linearly for displacement ductility between 2 and 6;

$\lambda = 0.75$ for lightweight aggregate concrete and 1.0 for normal-weight aggregate concrete;

N_u is the axial compression force (set to zero for tension force);

M/Vd is the largest ratio of moment to shear times effective depth under design loadings for the column but shall not be taken greater than 4 or less than 2;

d is the effective depth. It shall be permitted to assume that $d = 0.8h$, where h is the dimension of the column in the direction of shear; and

A_g is the gross cross-sectional area of the column.

Where axial force is calculated from the linear procedures of Chapter 7, the maximum compressive axial load in Eq. (10-3) shall be taken as equal to the value calculated using Eq. (7-5) considering design gravity load only and the minimum compression axial load calculated using Eq. (7-34). Alternatively, the limit analysis specified in Section 7.5.2.1.2 shall be permitted to determine design axial loads with the linear analysis procedures of Chapter 7. Alternative formulations for column strength that consider effects of reversed cyclic inelastic deformations and that are verified by experimental evidence shall be permitted.

For columns satisfying the detailing and proportioning requirements of ACI 318, Chapter 21, the shear strength equations of ACI 318 shall be permitted.

C10.4.2.3.1 Columns For the assessment of columns in Section 10.4.2.2.2, it is unnecessary to determine k and the displacement ductility demand.

As discussed in Section C10.3.3, experimental evidence indicates that flexural deformability can be reduced as coexisting shear forces increase. As flexural ductility demands increase, shear capacity decreases, which can result in a shear failure before theoretical flexural deformation capacities are reached. Caution should be exercised when flexural deformation capacities are determined by calculation.

Eq. (10-3) illustrates the reduction in column shear capacity with increasing nonlinear deformations and provides an estimate

of the mean observed shear strength for 51 rectangular reinforced concrete columns subjected to unidirectional lateral forces parallel to one face of the column (Sezen and Moehle 2004). The coefficient of variation for the ratio of measured to calculated shear strength is 0.15.

For a column experiencing flexural yielding before shear failure ($V_p < V_o$), displacement ductility demand is defined as the ratio of maximum displacement demand to yield displacement. The yield displacement is the lateral displacement of the column, determined using the effective rigidities from Table 10-5, at a shear demand resulting in flexural yielding of the plastic hinges, V_p. The maximum displacement demand for the column can be estimated as the maximum interstory displacement demand. Alternatively, the interstory displacement demand can be refined by accounting for the interstory displacements caused by rigid-body rotations at the column's base and top. Further discussion on displacement ductility demand is found in Sezen and Moehle (2004). Eq. (10-3) should not be used to determine displacement ductility (Elwood and Moehle 2005a).

The design professional is referred to the seminar New Information on Seismic Performance of Concrete Buildings (PEER/EERI) (2006) for a comparison of test data with several column shear strength equations.

10.4.2.3.2 Beam–Column Joints For beam–column joints, the nominal cross-sectional area A_j shall be defined by a joint depth equal to the column dimension in the direction of framing and a joint width equal to the smallest of the following:

1. The column width;
2. The beam width plus the joint depth; and
3. Twice the smaller perpendicular distance from the longitudinal axis of the beam to the column side.

Design forces shall be calculated based on development of flexural plastic hinges in adjacent framing members, including effective slab width, but need not exceed values calculated from design gravity and earthquake-load combinations. Nominal joint shear strength V_n shall be calculated using the general procedures of ACI 318, as modified by Eq. (10-4):

$$V_n = \lambda\gamma\sqrt{f_c'}A_j \text{ (lb/in.}^2\text{ units)}$$
$$V_n = 0.083\lambda\gamma\sqrt{f_c'}A_j \text{ (MPa units)} \quad (10\text{-}4)$$

where $\lambda = 0.75$ for lightweight aggregate concrete and 1.0 for normal-weight aggregate concrete;
A_j is the effective horizontal joint area with dimensions as defined above; and
γ is defined in Table 10-12.

10.4.2.4 Acceptance Criteria for Reinforced Concrete Beam–Column Moment Frames

10.4.2.4.1 Linear Static and Dynamic Procedures All actions shall be classified as being either deformation controlled or force controlled, as defined in Section 10.3.2.1.

Design actions on components shall be determined based on Chapter 7. Where the calculated DCR values exceed unity, the following design actions shall be determined using the limit analysis principles in Chapter 7:

1. Moments, shears, torsions, and development and splice actions corresponding to development of component strength in beams and columns;
2. Joint shears corresponding to strength development in adjacent beams and columns; and
3. Axial load in columns and joints, considering likely plastic action in components above the level in question.

Design actions shall be compared with design strengths in accordance with Section 7.5.2.2, with the *m*-factors selected from Tables 10-9, 10-13, and 10-14 for columns, beams, and beam–column joints, respectively. Components satisfying Eq. (7-36) or (7-37), as applicable, shall comply with the performance criteria.

Where the average DCR for columns at a level exceeds the average value for beams at the same level and exceeds the greater of 1.0 and *m*/2 for all columns at all levels, the level shall be defined as a weak story element. For weak story elements, one of the following shall be satisfied:

1. The check of average DCR values at the level shall be repeated, considering all primary and secondary components at the level with a weak story element at the level. If the average DCR values for vertical components exceeds the average value for horizontal components at the level and exceeds 2.0, the structure shall be reanalyzed using a nonlinear procedure or retrofitted to eliminate this deficiency;
2. The structure shall be reanalyzed using either the NSP or the NDP of Chapter 7; or
3. The structure shall be retrofitted to eliminate the weak story element condition.

10.4.2.4.2 Nonlinear Static and Dynamic Procedures Calculated component actions shall satisfy the requirements of Section 7.4.3.2. Where the generalized deformation is taken as rotation in the flexural plastic hinge zone in beams and columns, the plastic hinge rotation capacities shall be defined by Tables 10-7 and 10-8. Where the generalized deformation is shear distortion of the beam–column joint, shear angle capacities are defined by Table 10-10. Where inelastic action is indicated for a component or action not listed in Tables 10-7, 10-8, and 10-10, the performance shall be deemed unacceptable. Alternative approaches or values shall be permitted where justified by experimental evidence and analysis.

C10.4.2.4.2 Nonlinear Static and Dynamic Procedures Refer to Sections C10.4.2.2.2 and C10.4.2.3.1 for discussion of Table 10-8 and acceptance criteria for reinforced concrete columns.

10.4.2.5 Retrofit Measures for Reinforced Concrete Beam–Column Moment Frames Seismic retrofit measures for reinforced concrete beam–column moment frames shall meet the requirements of Section 10.3.7 and other provisions of this standard.

C10.4.2.5 Retrofit Measures for Reinforced Concrete Beam–Column Moment Frames Chapter 12 of FEMA 547 (2007) provides detailed descriptions of effective retrofit measures for use with concrete moment frames, including considerations such as constructibility, disruption for building occupants, and costs.

Retrofit measures that can be effective in rehabilitating reinforced concrete beam–column moment frames are the following:

1. Jacketing existing beams, columns, or joints with new reinforced concrete, steel, or fiber-reinforced polymer wrap overlays. Where reinforced concrete jackets are used, the design should provide detailing to enhance ductility. Component strength should not exceed any limiting strength of connections with adjacent components. Jackets should be designed to provide increased connection strength and improved continuity between adjacent components (FEMA 547 Sections 12.4.4, 12.4.5, and 12.4.6);

Table 10-13. Numerical Acceptance Criteria for Linear Procedures—Reinforced Concrete Beams

Conditions			*m*-Factors[a]				
			Performance Level				
				Component Type			
				Primary		Secondary	
			IO	LS	CP	LS	CP
Condition i. Beams controlled by flexure[b]							
$\frac{\rho-\rho'}{\rho_{bal}}$	Transverse reinforcement[c]	$\frac{V}{b_w d\sqrt{f_c'}}$ [d]					
≤0.0	C	≤3 (0.25)	3	6	7	6	10
≤0.0	C	≥6 (0.5)	2	3	4	3	5
≥0.5	C	≤3 (0.25)	2	3	4	3	5
≥0.5	C	≥6 (0.5)	2	2	3	2	4
≤0.0	NC	≤3 (0.25)	2	3	4	3	5
≤0.0	NC	≥6 (0.5)	1.25	2	3	2	4
≥0.5	NC	≤3 (0.25)	2	3	3	3	4
≥0.5	NC	≥6 (0.5)	1.25	2	2	2	3
Condition ii. Beams controlled by shear[b]							
Stirrup spacing ≤ *d*/2			1.25	1.5	1.75	3	4
Stirrup spacing > *d*/2			1.25	1.5	1.75	2	3
Condition iii. Beams controlled by inadequate development or splicing along the span[b]							
Stirrup spacing ≤ *d*/2			1.25	1.5	1.75	3	4
Stirrup spacing > *d*/2			1.25	1.5	1.75	2	3
Condition iv. Beams controlled by inadequate embedment into beam–column joint[b]							
			2	2	3	3	4

NOTE: f_c' in lb/in.^{2} (MPa) units.
[a]Values between those listed in the table should be determined by linear interpolation.
[b]Where more than one of conditions i, ii, iii, and iv occurs for a given component, use the minimum appropriate numerical value from the table.
[c]"C" and "NC" are abbreviations for conforming and nonconforming transverse reinforcement. Transverse reinforcement is conforming if, within the flexural plastic hinge region, hoops are spaced at ≤ *d*/3, and if, for components of moderate and high ductility demand, the strength provided by the hoops (V_s) is at least 3/4 of the design shear. Otherwise, the transverse reinforcement is considered nonconforming.
[d]V is the design shear force calculated using limit-state analysis procedures in accordance with Section 10.4.2.4.1.

2. Posttensioning existing beams, columns, or joints using external posttensioning reinforcement. Posttensioned reinforcement should be unbonded within a distance equal to twice the effective depth from sections where inelastic action is expected. Anchorages should be located away from regions where inelastic action is anticipated and should be designed with consideration of possible force variations from seismic forces;
3. Modifying the element by selective material removal from the existing element. Examples include (a) where nonstructural components interfere with the frame, eliminating this interference by removing or separating the nonstructural component from the frame; (b) weakening from concrete removal or severing longitudinal reinforcement to change the response from a nonductile to a more ductile mode, for example, weakening beams to promote formation of a strong-column, weak-beam system; and (c) segmenting walls to change stiffness and strength;
4. Improving deficient existing reinforcement details. Removal of cover concrete to modify existing reinforcement details should avoid damage to core concrete and the bond between existing reinforcement and core concrete. New cover concrete should be designed and constructed to achieve fully composite action with the existing materials (FEMA 547 Sections 12.4.4, 12.4.5, and 12.4.6);
5. Changing the building system to reduce demands on the existing elements. Examples include addition of supplementary seismic-force-resisting elements, such as walls or buttresses, seismic isolation, and mass reduction (FEMA 547 Chapter 24); and
6. Changing the frame element to a shear wall, infilled frame, or braced frame element by adding new material. Connections between new and existing materials should be designed to transfer the anticipated forces based on the design-load combinations. Where the existing concrete frame columns and beams act as boundary components and collectors for the new shear wall or braced frame, these should be checked for adequacy, considering strength, reinforcement development, and deformability. Diaphragms, including ties and collectors, should be evaluated and if necessary, rehabilitated to ensure a complete load path to the new shear wall or braced frame element (FEMA 547 Sections 12.4.1 and 12.4.2).

10.4.3 Posttensioned Concrete Beam–Column Moment Frames

10.4.3.1 General The analytical model for a posttensioned concrete beam–column frame element shall be established as specified in Section 10.4.2.1 for reinforced concrete beam–

Table 10-14. Numerical Acceptance Criteria for Linear Procedures—Reinforced Concrete Beam–Column Joints

Conditions			*m*-Factors[a]				
			Performance Level				
				Component Type			
				Primary		Secondary	
			IO	LS	CP	LS	CP
Condition i. Interior joints (for classification of joints, refer to Fig. 10-3)							
$\frac{P}{A_g f_c'}$ [b]	Transverse reinforcement[c]	$\frac{V}{V_n}$ [d]					
≤0.1	C	≤1.2	1	1	1	3	4
≤0.1	C	≥1.5	1	1	1	2	3
≥0.4	C	≤1.2	1	1	1	3	4
≥0.4	C	≥1.5	1	1	1	2	3
≤0.1	NC	≤1.2	1	1	1	2	3
≤0.1	NC	≥1.5	1	1	1	2	3
≥0.4	NC	≤1.2	1	1	1	2	3
≥0.4	NC	≥1.5	1	1	1	2	3
Condition ii. Other joints (for classification of joints, refer to Fig. 10-3)							
$\frac{P}{A_g f_c'}$ [b]	Transverse reinforcement[c]	$\frac{V}{V_n}$ [d]					
≤0.1	C	≤1.2	1	1	1	3	4
≤0.1	C	≥1.5	1	1	1	2	3
≥0.4	C	≤1.2	1	1	1	3	4
≥0.4	C	≥1.5	1	1	1	2	3
≤0.1	NC	≤1.2	1	1	1	2	3
≤0.1	NC	≥1.5	1	1	1	2	3
≥0.4	NC	≤1.2	1	1	1	1.5	2
≥0.4	NC	≥1.5	1	1	1	1.5	2

[a]Values between those listed in the table should be determined by linear interpolation.
[b]P is the design axial force on the column above the joint calculated using limit-state analysis procedures in accordance with Section 10.4.2.4. A_g is the gross cross-sectional area of the joint.
[c]V is the design shear force and V_n is the shear strength for the joint. The design shear force and shear strength should be calculated according to Section 10.4.2.4.1 and Section 10.4.2.3, respectively.
[d]"C" and "NC" are abbreviations for conforming and nonconforming transverse reinforcement, respectively. Transverse reinforcement is conforming if hoops are spaced at ≤ $h_c/2$ within the joint. Otherwise, the transverse reinforcement is considered nonconforming.

column moment frames. In addition to potential failure modes described in Section 10.4.2.1, the analysis model shall consider potential failure of tendon anchorages.

The analysis procedures described in Chapter 7 apply to frames with posttensioned beams satisfying the following conditions:

1. The average prestress f_{pc} calculated for an area equal to the product of the shortest and the perpendicular cross-sectional dimensions of the beam does not exceed the greater of 750 lb/in.^{2} (5 MPa) or $f_c'/12$ at locations of nonlinear action;
2. Prestressing tendons do not provide more than one-quarter of the strength at the joint face for both positive and negative moments; and
3. Anchorages for tendons are demonstrated to have performed satisfactorily for seismic forces in compliance with ACI 318 requirements. These anchorages should occur outside hinging areas or joints, except in existing components where experimental evidence demonstrates that the connection meets the Performance Objectives under design loadings.

Alternative procedures shall be used where these conditions are not satisfied.

10.4.3.2 Stiffness of Posttensioned Concrete Beam–Column Moment Frames

10.4.3.2.1 Linear Static and Dynamic Procedures Beams shall be modeled considering flexural and shear stiffnesses, including the effect of the slab acting as a flange in monolithic and composite construction. Columns shall be modeled considering flexural, shear, and axial stiffnesses. Refer to Section 10.3.1.2 for effective stiffness computations. Refer to Section 10.4.2.2.1 for modeling of joint stiffness.

10.4.3.2.2 Nonlinear Static Procedure Nonlinear load-deformation relations shall comply with Section 10.3.1.2 and reinforced concrete frame requirements of Section 10.4.2.2.2.

Values of the generalized deformation at points B, C, and D in Fig. 10-1 shall be derived either from experiments or from approved rational analyses, considering the interactions among flexure, axial load, and shear. Alternatively, where the generalized deformation is taken as rotation in the flexural plastic hinge zone and the three conditions of Section 10.4.3.1 are satisfied, beam plastic hinge rotation capacities shall be permitted to be as defined in Table 10-7. Columns and joints should be modeled as described in Section 10.4.2.2.

10.4.3.2.3 Nonlinear Dynamic Procedure For the NDP, the complete hysteretic behavior of each component shall be modeled using properties verified by experimental evidence. Fig. 10-1 shall be taken to represent the envelope relation for the analysis. Unloading and reloading properties shall represent significant stiffness and strength degradation characteristics as influenced by prestressing.

10.4.3.3 Strength of Posttensioned Concrete Beam–Column Moment Frames Component strengths shall be computed according to the general requirements of Section 10.3.2 and additional requirements of Section 10.4.2.3. Effects of prestressing on strength shall be considered.

For deformation-controlled actions, prestress shall be assumed effective to determine the maximum actions that can be developed in association with nonlinear response of the frame. For force-controlled actions, the effects on strength of prestress loss shall be considered as a design condition, where such losses are possible under design-load combinations including inelastic deformation reversals.

10.4.3.4 Acceptance Criteria for Posttensioned Concrete Beam–Column Moment Frames Acceptance criteria for posttensioned concrete beam–column moment frames shall follow the criteria for reinforced concrete beam–column frames specified in Section 10.4.2.4.

Modeling parameters and acceptance criteria shall be based on Tables 10-7 through 10-10, 10-13, and 10-14.

10.4.3.5 Retrofit Measures for Posttensioned Concrete Beam–Column Moment Frames Seismic retrofit measures for posttensioned concrete beam–column moment frames shall meet the requirements of Section 10.3.7 and other provisions of this standard.

C10.4.3.5 Retrofit Measures for Posttensioned Concrete Beam–Column Moment Frames Retrofit measures described in Section C10.4.2.5 for reinforced concrete beam–column moment frames can be effective in retrofit posttensioned concrete beam–column moment frames. Further retrofit measures can be found in FEMA 547 (2007).

10.4.4 Slab–Column Moment Frames

10.4.4.1 General The analytical model for a slab–column frame element shall represent strength, stiffness, and deformation capacity of slabs, columns, slab–column connections, and other components of the frame. The connection between the columns and foundation shall be modeled based on the details of the column–foundation connection and rigidity of the foundation–soil system. Potential failure in flexure, shear, shear-moment transfer (punching shear), and reinforcement development at any section along the component length shall be considered. The effects of changes in cross section, slab openings, and interaction with structural and nonstructural components shall be considered.

An analytical model of the slab–column frame based on any of the following approaches shall be permitted to be used:

1. Effective beam width model: Columns and slabs are represented by line elements rigidly interconnected at the slab–column connection, where the slab width included in the model is adjusted to account for flexibility of the slab–column connection;
2. Equivalent frame model: Columns and slabs are represented by line elements, and stiffness of column or slab elements is adjusted to account for flexibility of the slab–column connection; and
3. Finite element model: Columns are represented by line elements and the slab by plate-bending elements.

C10.4.4.1 General The stiffness of a slab–column frame is highly dependent on the ratio of the column cross section dimensions (c_1 and c_2) to the slab plan dimensions (l_1 and l_2).

Approaches for modeling slab–column frame systems differ primarily in how slab stiffness is incorporated in the analytical model.

1. Effective beam width model: Slab element width is reduced to adjust the elastic stiffness to more closely match measured values (Pecknold 1975). Column behavior and slab–column moment and shear transfer are modeled separately;
2. Equivalent frame model: Shear and flexure in the slab beyond the width of the column are assumed to be transferred to the column through torsional elements perpendicular to the slab span direction (Vanderbilt and Corley 1983). Flexibility of the torsional elements reduces the elastic stiffness of the overall frame. Although it is possible to model them separately, torsional elements are typically lumped with columns or the slab to produce a frame with equivalent stiffness (Chapter 13 of ACI 318); and
3. Finite element model: The slab distortion is modeled explicitly using finite elements.

Each approach is considered acceptable for analytical modeling of slab–column frames. Research has shown that the effective beam approach tends to overestimate lateral stiffness, whereas the equivalent frame approach tends to underestimate lateral stiffness of slab–column systems responding in the elastic range (Hwang and Moehle 2000). For either approach, the elastic stiffness should be reduced further to account for cracking in slab–column systems responding in the inelastic range (Luo et al. 1994, Hwang and Moehle 2000, and Dovich and Wight 2005).

10.4.4.2 Stiffness of Slab–Column Moment Frames

10.4.4.2.1 Linear Static and Dynamic Procedures Slabs shall be modeled considering flexural, shear, and torsional (in the slab adjacent to the column) stiffnesses. Columns shall be modeled considering flexural, shear, and axial stiffnesses. Slab–column connections shall be modeled as stiff or rigid components. Although effective component stiffnesses shall be determined according to the general principles of Section 10.3.1.2, adjustments can be made based on experimental evidence.

C10.4.4.2.1 Linear Static and Dynamic Procedures

1. Effective beam width model: Allen and Darvall (1977) provide tables of effective width coefficients for different combinations of plate aspect ratios (l_1/l_2) and column width-to-slab span ratios (c_1/l_1 or c_2/l_1). Research indicates that the effective width of exterior bays should be less than the effective width of interior bays because of the higher flexibility of one-sided slab–column connections at the frame end. Hwang and Moehle (2000) provide equations for effective width that show the relationship between exterior and interior bays is about 1/2.

   Eq. (C10-3) can be used instead of tables from Allen and Darvall (1977).

$$\text{For interior bays: } b_{\text{eff}} = 2c_1 + l_1/3 \qquad \text{(C10-3a)}$$

$$\text{For exterior bays: } b_{\text{eff}} = c_1 + l_1/6 \qquad \text{(C10-3b)}$$

   where b_{eff} is the effective slab width.

   To account for cracking from temperature, shrinkage, or nonlinear response, slab stiffness determined using gross

section properties based on the above guidance should be reduced by an effective stiffness factor β_{eff}. There is general agreement that $\beta_{eff} = 1/3$ is appropriate for nonprestressed slabs (Vanderbilt and Corley 1983). Somewhat higher, yet conservative, values can be obtained using Eq. (C10-4) from Hwang and Moehle (2000):

$$\beta_{eff} = 4c_1/l_1 \geq 1/3 \qquad \text{(C10-4)}$$

For prestressed posttensioned slabs, it is generally agreed that higher values of β_{eff} are appropriate ($\beta_{eff} = 1/2$) because of reduced cracking caused by prestressing (Kang and Wallace 2005).

2. Equivalent frame model: Column, slab–beam, and torsional connection element properties for the equivalent frame model are defined in Chapter 13 of ACI 318. To account for cracking caused by temperature, shrinkage, or nonlinear response, the stiffness of the torsional connection element based on gross section properties defined in ACI 318 should be multiplied by a factor of 1/3.

10.4.4.2.2 Nonlinear Static Procedure Nonlinear load-deformation relations shall comply with the requirements of Section 10.3.1.2. Nonlinear modeling parameters for slab–column connections are provided in Table 10-15.

Nonlinear static models shall be capable of representing inelastic response along the component length, except where it is shown by equilibrium that yielding is restricted to the component ends.

Idealized load-deformation relations shall be modeled using the generalized relation shown in Fig. 10-1. The overall load-deformation relation shall be established so that the maximum resistance is consistent with the design strength specifications of Sections 10.3.2 and 10.4.4.3. For columns, the generalized deformation shown in Fig. 10-1 is flexural plastic hinge rotation with parameters as defined in Table 10-8. For slabs and slab–column connections, the generalized deformation shown in Fig. 10-1 is plastic rotation with parameters as defined in Table 10-15. Different relations shall be permitted where verified by experimentally obtained cyclic response relations of slab–column subassemblies.

Table 10-15. Modeling Parameters and Numerical Acceptance Criteria for Nonlinear Procedures—Two-Way Slabs and Slab–Column Connections

		Modeling Parameters[a]			Acceptance Criteria[a]		
					Plastic Rotation Angle (radians)		
		Plastic Rotation Angle (radians)		Residual Strength Ratio	Performance Level		
						Secondary	
Conditions		*a*	*b*	*c*	IO	LS	CP
Condition i. Reinforced concrete slab–column connections[b]							
$\frac{V_g}{V_o}$[c]	Continuity reinforcement[d]						
0	Yes	0.035	0.05	0.2	0.01	0.035	0.05
0.2	Yes	0.03	0.04	0.2	0.01	0.03	0.04
0.4	Yes	0.02	0.03	0.2	0	0.02	0.03
≥0.6	Yes	0	0.02	0	0	0	0.02
0	No	0.025	0.025	0	0.01	0.02	0.025
0.2	No	0.02	0.02	0	0.01	0.015	0.02
0.4	No	0.01	0.01	0	0	0.008	0.01
0.6	No	0	0	0	0	0	0
>0.6	No	0	0	0	—[e]	—[e]	—[e]
Condition ii. Posttensioned slab–column connections[b]							
$\frac{V_g}{V_o}$[c]	Continuity reinforcement[d]						
0	Yes	0.035	0.05	0.4	0.01	0.035	0.05
0.6	Yes	0.005	0.03	0.2	0	0.025	0.03
>0.6	Yes	0	0.02	0.2	0	0.015	0.02
0	No	0.025	0.025	0	0.01	0.02	0.025
0.6	No	0	0	0	0	0	0
>0.6	No	0	0	0	—[e]	—[e]	—[e]
Condition iii. Slabs controlled by inadequate development or splicing along the span[b]							
		0	0.02	0	0	0.01	0.02
Condition iv. Slabs controlled by inadequate embedment into slab–column joint[b]							
		0.015	0.03	0.2	0.01	0.02	0.03

[a]Values between those listed in the table should be determined by linear interpolation.
[b]Where more than one of conditions i, ii, iii, and iv occur for a given component, use the minimum appropriate numerical value from the table.
[c]V_g is the gravity shear acting on the slab critical section as defined by ACI 318, and V_o is the direct punching shear strength as defined by ACI 318.
[d]"Yes" should be used where the area of effectively continuous main bottom bars passing through the column cage in each direction is greater than or equal to $0.5V_g/(\phi f_y)$. Where the slab is posttensioned, "Yes" should be used where at least one of the posttensioning tendons in each direction passes through the column cage. Otherwise, "No" should be used.
[e]Action should be treated as force controlled.

C10.4.4.2.2 Nonlinear Static Procedure The values provided in Table 10-15 are used to assess punching failures at slab–column connections. Elwood et al. (2007) provides a comparison of the modeling parameters in Table 10-15 and test data summarized by Kang and Wallace (2006). Lateral drift ratio is typically reported for test data; therefore, plastic rotations were derived from the test data assuming column deformations were negligible and yield rotations of 0.01 and 0.015 radians for reinforced concrete and posttensioned slabs, respectively. The larger rotation value for posttensioned connections reflects the larger span-to-slab thickness ratios common for this type of construction. Continuity reinforcement for reinforced concrete connections is based on Joint ACI-ASCE Committee 352 recommendations (ACI 352R).

Plastic rotation values are approximately mean and mean minus one standard deviation values for connections with and without continuity reinforcement, respectively. Mean minus one standard deviation values give total (yield plus plastic) rotation values that are close to the maximum drift values allowed by ACI 318 Section 21.13.5, without the use of slab shear reinforcement. Few data exist for reinforced concrete connections subjected to gravity shear ratios greater than 0.6 and for posttensioned connections subjected to reverse cyclic loading. The residual strength capacity for posttensioned connections is based on test results reported by Qaisrani (1993). Although relatively few tests have been reported for edge connections, the limited data available suggest that the relationship between rotation and gravity shear ratio for exterior connections is similar to the trend for interior connections.

Modeling of slab–column connections is commonly accomplished using beam elements to represent the slab and a rigid-plastic torsional member to represent moment and shear transfer at the connection between slab and column (Fig. C10-2) (Elwood et al. 2007). If the punching capacity of the slab–column connection is insufficient to develop the nominal capacity for the developed slab flexural reinforcement provided within the column strip, then all yielding is assumed to occur in the torsional element using the modeling parameters provided in Table 10-15. For strong connections where yielding of slab reinforcement within the column strip is expected, plastic rotations should be modeled only within the beam elements framing into the torsional element using the plastic rotation modeling parameters provided in Table 10-15 to define the plastic hinges at the beam ends.

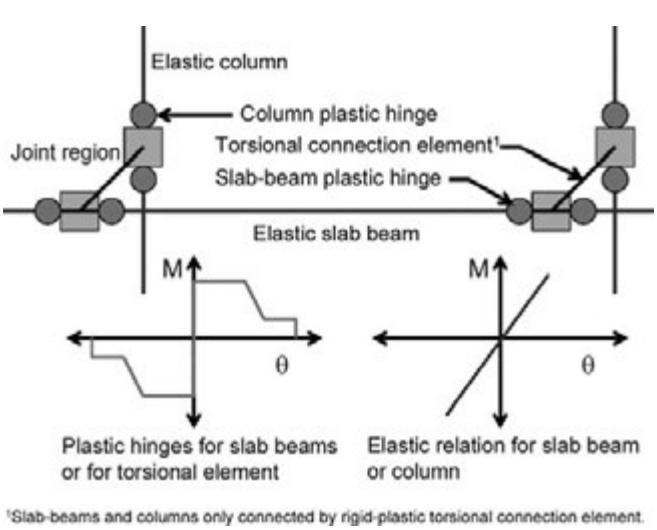

FIG. C10-2. Modeling of Slab–Column Connection

10.4.4.2.3 Nonlinear Dynamic Procedure The requirements of Sections 10.3.2 and 10.4.2.2.3 for reinforced concrete beam–column moment frames shall apply to slab–column moment frames.

10.4.4.3 Strength of Slab–Column Moment Frames Component strengths shall be computed according to the general requirements of Section 10.4.2, as modified in this section. For columns, evaluation of shear strength according to Section 10.4.2.3 shall be permitted to be used.

The flexural strength of a slab to resist moment caused by lateral deformations shall be calculated as $M_{nCS} - M_{gCS}$, where M_{nCS} is the design flexural strength of the column strip and M_{gCS} is the column strip moment caused by gravity loads. M_{gCS} shall be calculated according to the procedures of ACI 318 for the gravity loads specified in Section 7.2.2.

Slab–column connections shall be investigated for potential failure in shear and moment transfer, considering the combined action of flexure, shear, and torsion acting in the slab at the connection with the column.

For interior connections without transverse beams and exterior connections with moment about an axis perpendicular to the slab edge, the shear and moment transfer strength, or the "torsional" element strength, shall be permitted to be calculated as the minimum of

1. Strength calculated considering eccentricity of shear on a slab-critical section because of combined shear and moment in accordance with ACI 318; and
2. Moment transfer strength equal to $\Sigma M_n/\gamma_f$, where ΣM_n is the sum of positive and negative flexural strengths of a section of slab between lines that are two and one-half slab or drop panel thicknesses ($2.5h$) outside opposite faces of the column or capital; γ_f is the fraction of the moment resisted by flexure per ACI 318; and h is slab thickness.

For moment about an axis parallel to slab edge at exterior connections without transverse beams, where the shear on the slab critical section caused by gravity loads does not exceed $0.75V_c$ or the shear at a corner support does not exceed $0.5V_c$, the moment transfer strength shall be permitted to be taken as equal to the flexural strength of a section of slab between lines that are a distance c_1 outside opposite faces of the column or capital. V_c is the direct punching shear strength defined by ACI 318.

C10.4.4.3 Strength of Slab–Column Moment Frames Alternative expressions for calculating moment transfer strength of interior and exterior slab–column connections can be found in Luo et al. (1994), and detailed modeling recommendations for reinforced and posttensioned concrete slab–column frames, as well as comparisons with shake table tests, can be found in Kang et al. (2006).

10.4.4.4 Acceptance Criteria for Slab–Column Moment Frames

10.4.4.4.1 Linear Static and Dynamic Procedures Component actions shall be classified as being deformation controlled or force controlled, as defined in Section 10.3.2.1. In primary components, deformation-controlled actions shall be restricted to flexure in slabs and columns, and shear and moment transfer in slab–column connections. In secondary components, deformation-controlled actions are permitted in shear and reinforcement development (Table 10-16). All other actions shall be classified as force controlled.

Design actions on components shall be determined as prescribed in Chapter 7. Where the calculated DCR values exceed

Table 10-16. Numerical Acceptance Criteria for Linear Procedures—Two-Way Slabs and Slab–Column Connections

		m-Factors[a]				
		Performance Level				
			Component Type			
			Primary		Secondary	
Conditions		IO	LS	CP	LS	CP
Condition i. Reinforced concrete slab–column connections[b]						
$\frac{V_g}{V_o}$[c]	Continuity reinforcement[d]					
0	Yes	2	2.75	3.5	3.5	4.5
0.2	Yes	1.5	2.5	3	3	3.75
0.4	Yes	1	2	2.25	2.25	3
≥0.6	Yes	1	1	1	1	2.25
0	No	2	2.25	2.25	2.25	2.75
0.2	No	1.5	2	2	2	2.25
0.4	No	1	1.5	1.5	1.5	1.75
0.6	No	1	1	1	1	1
>0.6	No	—[e]	—[e]	—[e]	—[e]	—[e]
Condition ii. Posttensioned slab–column connections[b]						
$\frac{V_g}{V_o}$[c]	Continuity reinforcement[d]					
0	Yes	1.5	2	2.5	2.5	3.25
0.6	Yes	1	1	1	2	2.25
>0.6	Yes	1	1	1	1.5	1.75
0	No	1.25	1.75	1.75	1.75	2
0.6	No	1	1	1	1	1
>0.6	No	—[e]	—[e]	—[e]	—[e]	—[e]
Condition iii. Slabs controlled by inadequate development or splicing along the span[b]						
		—[e]	—[e]	—[e]	3	4
Condition iv. Slabs controlled by inadequate embedment into slab–column joint[b]						
		2	2	3	3	4

[a]Values between those listed in the table should be determined by linear interpolation.
[b]Where more than one of conditions i, ii, iii, and iv occur for a given component, use the minimum appropriate numerical value from the table.
[c]V_g is the the gravity shear acting on the slab critical section as defined by ACI 318, and V_o is the direct punching shear strength as defined by ACI 318.
[d]"Yes" should be used where the area of effectively continuous main bottom bars passing through the column cage in each direction is greater than or equal to $0.5V_g/(\phi f_y)$. Where the slab is posttensioned, "Yes" should be used where at least one of the posttensioning tendons in each direction passes through the column cage. Otherwise, "No" should be used.
[e]Action should be treated as force controlled.

unity, the following design actions shall be determined using limit analysis principles as prescribed in Chapter 7:

1. Moments, shears, torsions, and development and splice actions corresponding to the development of component strength in slabs and columns; and
2. Axial load in columns, considering likely plastic action in components above the level in question.

Design actions shall be compared with design strengths in accordance with Section 7.5.2.2, and *m*-factors for slab–column frame components should be selected from Tables 10-9 and 10-16.

Where the average DCRs for columns at a level exceed the average value for slabs at the same level and exceed the greater of 1.0 and *m*/2, the element shall be defined as a weak story element and shall be evaluated by the procedure for weak story elements in Section 10.4.2.4.1.

10.4.4.4.2 Nonlinear Static and Dynamic Procedures Inelastic response shall be restricted to actions in Tables 10-8 and 10-15, except where it is demonstrated by experimental evidence and analysis that other inelastic actions are acceptable for the selected performance levels. Other actions shall be defined as force controlled.

Calculated component actions shall satisfy the requirements of Section 7.5.3.2. Maximum permissible inelastic deformations shall be taken from Tables 10-8 and 10-15. Alternative values shall be permitted where justified by experimental evidence and analysis.

C10.4.4.4.2 Nonlinear Static and Dynamic Procedures Section C10.4.4.2.2 has a discussion of Table 10-15 and acceptance criteria for reinforced concrete slab–column connections. Section C10.4.2.2.2 has a discussion of Table 10-8 and acceptance criteria for reinforced concrete columns.

10.4.4.5 Retrofit Measures for Slab–Column Moment Frames Seismic retrofit measures for slab–column moment frames shall meet the requirements of Section 10.3.7 and other provisions of this standard.

C10.4.4.5 Retrofit Measures for Slab–Column Moment Frames Retrofit measures for reinforced concrete beam–column

moment frames can be effective in rehabilitating reinforced concrete slab–column moment frames. Further retrofit measures are found in FEMA 547 (2007).

10.5 PRECAST CONCRETE FRAMES

10.5.1 Types of Precast Concrete Frames Precast concrete frames shall be defined as those elements that are constructed from individually made beams and columns that are assembled to create gravity-load-carrying systems. These systems shall include those that are considered in design to resist seismic forces and those that are considered in design as secondary elements that do not resist seismic forces but must resist the effects of deformations resulting from seismic forces.

10.5.1.1 Precast Concrete Frames Expected to Resist Seismic Forces Frames of this classification shall be assembled using either reinforcement and wet concrete or dry joints (connections are made by bolting, welding, posttensioning, or other similar means) in a way that results in significant seismic force resistance in the framing element. Frames of this classification resist seismic forces either acting alone or acting in conjunction with shear walls, braced frames, or other seismic-force-resisting elements.

C10.5.1.1 Precast Concrete Frames Expected to Resist Seismic Forces These systems are recognized and accepted by FEMA P750 and are based on ACI 318, which specifies safety and serviceability levels expected from precast concrete frame construction. In the referenced documents, precast frames are classified not by the method of construction (wet or dry joints), but by the expected behavior resulting from the detailing used. In addition to recognizing varying levels of ductile performance as a result of overall frame detailing, ACI 318 Section 21.6 acknowledges three types of unit-to-unit connections that can result in the highest level of performance. Such connections are either "strong" or "ductile" as defined in Sections 21.1 and 21.6 of ACI 318 or have demonstrated acceptable performance where tested in accordance with ACI T1.1-01.

10.5.1.2 Precast Concrete Frames Not Expected to Resist Seismic Forces Directly Frames of this classification shall be assembled using dry joints in a way that does not result in significant seismic force resistance in the framing element. Shear walls, braced frames, or moment frames provide the entire seismic force resistance, with the precast concrete frame system deforming in a manner that is compatible with the structure as a whole.

10.5.2 Precast Concrete Frames Expected to Resist Seismic Forces

10.5.2.1 General The analytical model for a frame element of this classification shall represent strength, stiffness, and deformation capacity of beams, columns, beam–column joints, and other components of the frame. Potential failure in flexure, shear, and reinforcement development at any section along the component length shall be considered. Interaction with other components, including nonstructural components, shall be included. All other considerations of Section 10.4.2.1 shall be taken into account. In addition, the effects of shortening caused by creep, and other effects of prestressing and posttensioning on member behavior, shall be evaluated. Where dry joints are used in assembling the precast system, consideration shall be given to the effect of those joints on overall behavior. Where connections yield under the specified seismic forces, the analysis model shall take this effect into account.

10.5.2.2 Stiffness of Precast Concrete Frames Expected to Resist Seismic Forces Stiffness for analysis shall be as defined in Section 10.4.2.2. The effects of prestressing shall be considered where computing the effective stiffness values using Table 10-5. Flexibilities associated with connections shall be included in the analytical model.

10.5.2.3 Strength of Precast Concrete Frames Expected to Resist Seismic Forces Component strength shall be computed according to the requirements of Section 10.4.2.3, with the additional requirement that the following effects be included in the analysis:

1. Effects of prestressing that are present, including but not limited to reduction in rotation capacity, secondary stresses induced, and amount of effective prestress force remaining;
2. Effects of construction sequence, including the possibility of construction of the moment connections occurring after portions of the structure are subjected to dead loads;
3. Effects of restraint caused by interaction with interconnected wall or brace components; and
4. Effects of connection strength, considered in accordance with Section 10.3.6.

10.5.2.4 Acceptance Criteria for Precast Concrete Frames Expected to Resist Seismic Forces Acceptance criteria for precast concrete frames expected to resist seismic forces shall be as specified in Section 10.4.2.4, except that the factors defined in Section 10.4.2.3 shall also be considered. Connections shall comply with the requirements of Section 10.3.6.

10.5.2.5 Retrofit Measures for Precast Concrete Frames Expected to Resist Seismic Forces Seismic retrofit measures for precast concrete frames shall meet the requirements of Section 10.3.7 and other provisions of this standard.

C10.5.2.5 Retrofit Measures for Precast Concrete Frames Expected to Resist Seismic Forces The retrofit measures described in C10.4.2.5 for reinforced concrete beam–column moment frames may also be effective in retrofitting precast concrete moment frames. When installing new components or materials to the existing system, existing prestressing strands should be protected.

10.5.3 Precast Concrete Frames Not Expected to Resist Seismic Forces Directly

10.5.3.1 General The analytical model for precast concrete frames that are not expected to resist seismic forces directly shall comply with the requirements of Section 10.5.2.1 and shall include the effects of deformations that are calculated to occur under the specified seismic loadings.

10.5.3.2 Stiffness of Precast Concrete Frames Not Expected to Resist Seismic Forces Directly The analytical model shall include either realistic lateral stiffness of these frames to evaluate the effects of deformations under seismic forces or, if the lateral stiffness is ignored in the analytical model, the effects of calculated building drift on these frames shall be evaluated separately. The analytical model shall consider the negative effects of connection stiffness on component response where that stiffness results in actions that may cause component failure.

C10.5.3.2 Stiffness of Precast Concrete Frames Not Expected to Resist Seismic Forces Directly The stiffness used in the analysis should consider possible resistance that may develop under lateral deformation. In some cases, it may be appropriate to assume zero lateral stiffness. However, the Northridge earth-

quake graphically demonstrated that there are few instances where the precast column can be considered to be completely pinned top and bottom, and as a consequence, not resist any shear from building drift. Several parking structures collapsed as a result of this defect. Conservative assumptions should be made.

10.5.3.3 Strength of Precast Concrete Frames Not Expected to Resist Seismic Forces Directly Component strength shall be computed according to the requirements of Section 10.5.2.3. All components shall have sufficient strength and ductility to transmit induced forces from one member to another and to the designated seismic-force-resisting system.

10.5.3.4 Acceptance Criteria for Precast Concrete Frames Not Expected to Resist Seismic Forces Directly Acceptance criteria for components in precast concrete frames not expected to resist seismic forces directly shall be as specified in Section 10.5.2.4. All moments, shear forces, and axial loads induced through the deformation of the structural system shall be checked using appropriate criteria in the referenced section.

10.5.3.5 Retrofit Measures for Precast Concrete Frames Not Expected to Resist Seismic Forces Directly Seismic retrofit measures for precast moment frames shall meet the requirements of Section 10.3.7 and other provisions of this standard.

C10.5.3.5 Retrofit Measures for Precast Concrete Frames Not Expected to Resist Seismic Forces Directly The retrofit measures described in C10.4.2.5 for reinforced concrete beam–column moment frames may also be effective in retrofitting precast concrete frames not expected to resist seismic forces directly. When installing new components or materials to the existing system, existing prestressing strands should be protected.

10.6 CONCRETE FRAMES WITH INFILLS

10.6.1 Types of Concrete Frames with Infills Concrete frames with infills are elements with complete gravity-load-carrying concrete frames infilled with masonry or concrete, constructed in such a way that the infill and the concrete frame interact when subjected to vertical and seismic forces.

Isolated infills are infills isolated from the surrounding frame complying with the minimum gap requirements specified in Section 11.4.1. If all infills in a frame are isolated infills, the frame shall be analyzed as an isolated frame according to provisions given elsewhere in this chapter, and the isolated infill panels shall be analyzed according to the requirements of Chapter 11.

10.6.1.1 Types of Frames The provisions of Section 10.6 shall apply to concrete frames, as defined in Sections 10.4, 10.5, and 10.9, which interact with infills.

10.6.1.2 Masonry Infills The provisions of Section 10.6 shall apply to masonry infills, as defined in Chapter 11, which interact with concrete frames.

10.6.1.3 Concrete Infills The provisions of Section 10.6 shall apply to concrete infills that interact with concrete frames, where the infills were constructed to fill the space within the bay of a complete gravity frame without special provision for continuity from story to story. The concrete of the infill shall be evaluated separately from the concrete of the frame.

C10.6.1.3 Concrete Infills The construction of concrete-infilled frames is similar to that of masonry-infilled frames, except that the infill is of concrete instead of masonry units. In older existing buildings, the concrete infill commonly contains nominal reinforcement, which is unlikely to extend into the surrounding frame. The concrete is likely to be of lower quality than that used in the frame and should be investigated separately from investigations of the frame concrete.

10.6.2 Concrete Frames with Masonry Infills

10.6.2.1 General The analytical model for a concrete frame with masonry infills shall represent strength, stiffness, and deformation capacity of beams, slabs, columns, beam–column joints, masonry infills, and all connections and components of the element. Potential failure in flexure, shear, anchorage, reinforcement development, or crushing at any section shall be considered. Interaction with nonstructural components shall be included.

For a concrete frame with masonry infill resisting seismic forces within its plane, modeling of the response using a linear elastic model shall be permitted provided that the infill does not crack when subjected to design seismic forces. If the infill does not crack when subjected to design seismic forces, modeling the assemblage of frame and infill as a homogeneous medium shall be permitted.

For a concrete frame with masonry infills that cracks when subjected to design seismic forces, modeling of the response using a diagonally braced frame model, in which the columns act as vertical chords, the beams act as horizontal ties, and the infill acts as an equivalent compression strut, shall be permitted. Requirements for the equivalent compression strut analogy shall be as specified in Chapter 11.

Frame components shall be evaluated for forces imparted to them through interaction of the frame with the infill, as specified in Chapter 11. In frames with full-height masonry infills, the evaluation shall include the effect of strut compression forces applied to the column and beam, eccentric from the beam–column joint. In frames with partial-height masonry infills, the evaluation shall include the reduced effective length of the columns above the infilled portion of the bay.

C10.6.2.1 General The design professional is referred to FEMA 274 (1997b) and FEMA 306 (1998b) for additional information regarding the behavior of masonry infills.

10.6.2.2 Stiffness of Concrete Frames with Masonry Infills

10.6.2.2.1 Linear Static and Dynamic Procedures In frames having infills in some bays and no infill in other bays, the restraint of the infill shall be represented as described in Section 10.6.2.1, and the non-infilled bays shall be modeled as frames as specified in appropriate portions of Sections 10.4, 10.5, and 10.9. Where infills create a discontinuous wall, the effects of the discontinuity on overall building performance shall be evaluated. Effective stiffnesses shall be in accordance with Section 10.3.1.2.

10.6.2.2.2 Nonlinear Static Procedure Nonlinear load-deformation relations for use in analysis by the NSP shall follow the requirements of Section 10.3.1.2.2.

Modeling beams and columns using nonlinear truss elements shall be permitted in infilled portions of the frame. Beams and columns in noninfilled portions of the frame shall be modeled using the relevant specifications of Sections 10.4, 10.5, and 10.9. The model shall be capable of representing inelastic response along the component lengths.

Monotonic load-deformation relations shall be according to the generalized relation shown in Fig. 10-1, except different relations shall be permitted where verified by tests. Numerical quantities in Fig. 10-1 shall be derived from tests or by analytical

Table 10-17. Modeling Parameters and Numerical Acceptance Criteria for Nonlinear Procedures—Reinforced Concrete Infilled Frames

	Modeling Parameters[a]			Acceptance Criteria		
	Total Strain		Residual Strength Ratio	Total Strain		
				Performance Level		
Conditions	*d*	*e*	*c*	IO	LS	CP
i. Columns modeled as compression chords[b]						
Columns confined along entire length[c]	0.02	0.04	0.4	0.003	0.03	0.04
All other cases	0.003	0.01	0.2	0.002	0.01	0.01
ii. Columns modeled as tension chords[b]						
Columns with well confined splices or no splices	0.05	0.05	0.0	0.01	0.04	0.05
All other cases	See note *d*	0.03	0.2	See note *d*	0.02	0.03

[a]Interpolation shall not be permitted.
[b]If load reversals result in both conditions i and ii applying to a single column, both conditions shall be checked.
[c]A column shall be permitted to be considered to be confined along its entire length where the quantity of hoops along the entire story height including the joint is equal to three-quarters of that required by ACI 318 for boundary components of concrete shear walls. The maximum longitudinal spacing of sets of hoops shall not exceed either $h/3$ or $8d_b$.
[d]Potential for splice failure shall be evaluated directly to determine the modeling and acceptance criteria. For these cases, refer to the generalized procedure of Section 10.6.3.2.

procedures, as specified in Chapter 7, and shall take into account the interactions between frame and infill components. Alternatively, the following procedure shall be permitted for monolithic reinforced concrete frames.

1. For beams and columns in noninfilled portions of frames, where the generalized deformation is taken as rotation in the flexural plastic hinge zone, the plastic hinge rotation capacities shall be as defined by Tables 10-7 and 10-8.
2. For masonry infills, the generalized deformations and control points shall be as defined in Chapter 11.
3. For beams and columns in infilled portions of frames, where the generalized deformation is taken as elongation or compression displacement of the beams or columns, the tension and compression strain capacities shall be as specified in Table 10-17.

10.6.2.2.3 Nonlinear Dynamic Procedure Nonlinear load-deformation relations for use in analysis by NDP shall model the complete hysteretic behavior of each component using properties verified by tests. Unloading and reloading properties shall represent stiffness and strength degradation characteristics.

10.6.2.3 Strength of Concrete Frames with Masonry Infills Strengths of reinforced concrete components shall be calculated according to the general requirements of Section 10.3.2, as modified by other specifications of this chapter. Strengths of masonry infills shall be calculated according to the requirements of Chapter 11. Strength calculations shall consider the following:

1. Limitations imposed by beams, columns, and joints in noninfilled portions of frames;
2. Tensile and compressive capacity of columns acting as boundary components of infilled frames;
3. Local forces applied from the infill to the frame;
4. Strength of the infill; and
5. Connections with adjacent components.

10.6.2.4 Acceptance Criteria for Concrete Frames with Masonry Infills

10.6.2.4.1 Linear Static and Dynamic Procedures All component actions shall be classified as either deformation controlled or force controlled, as defined in Section 7.5.1. In primary components, deformation-controlled actions shall be restricted to flexure and axial actions in beams, slabs, and columns, and lateral deformations in masonry infill panels. In secondary components, deformation-controlled actions shall be restricted to those actions identified for the isolated frame in Sections 10.4, 10.5, and 10.9, as appropriate, and for the masonry infill in Section 11.4.

Design actions shall be determined as prescribed in Chapter 7. Where calculated DCR values exceed unity, the following design actions shall be determined using limit analysis principles as prescribed in Chapter 7: (1) moments, shears, torsions, and development and splice actions corresponding to development of component strength in beams, columns, or masonry infills; and (2) column axial load corresponding to development of the flexural capacity of the infilled frame acting as a cantilever wall.

Design actions shall be compared with design strengths in accordance with Section 7.5.2.2.

Values of *m*-factors shall be as specified in Section 11.4.2.4 for masonry infills; applicable portions of Sections 10.4, 10.5, and 10.9 for concrete frames; and Table 10-18 for columns modeled as tension and compression chords. Those components that have design actions less than design strengths shall be assumed to satisfy the performance criteria for those components.

10.6.2.4.2 Nonlinear Static and Dynamic Procedures In the design model, inelastic response shall be restricted to those components and actions that are permitted for isolated frames as specified in Sections 10.4, 10.5, and 10.9, and for masonry infills as specified in Section 11.4.

Calculated component actions shall satisfy the requirements of Section 7.5.3.2 and shall not exceed the numerical values listed in Table 10-17; the relevant tables for isolated frames given in Sections 10.4, 10.5, and 10.9; and the relevant tables for masonry infills given in Chapter 11. Component actions not listed in Tables 10-7, 10-8, and 10-10 shall be treated as force controlled. Alternative approaches or values shall be permitted where justified by experimental evidence and analysis.

10.6.2.5 Retrofit Measures for Concrete Frames with Masonry Infills Seismic retrofit measures for concrete frames

Table 10-18. Numerical Acceptance Criteria for Linear Procedures—Reinforced Concrete Infilled Frames

	m-Factors[a]				
	Performance Level				
		Component Type			
		Primary		Secondary	
Conditions	IO	LS	CP	LS	CP
i. Columns modeled as compression chords[b]					
Columns confined along entire length[c]	1	3	4	4	5
All other cases	1	1	1	1	1
ii. Columns modeled as tension chords[b]					
Columns with well confined splices or no splices	3	4	5	5	6
All other cases	1	2	2	3	4

[a]Interpolation shall not be permitted.
[b]If load reversals result in both Conditions i and ii applying to a single column, both conditions shall be checked.
[c]A column may be considered to be confined along its entire length where the quantity of hoops along the entire story height, including the joint, is equal to three-quarters of that required by ACI 318 for boundary components of concrete shear walls. The maximum longitudinal spacing of sets of hoops shall not exceed either $h/3$ or $8d_b$.

with masonry infills shall meet the requirements of Section 10.3.7 and other provisions of this standard.

C10.6.2.5 Retrofit Measures for Concrete Frames with Masonry Infills The retrofit measures described in relevant commentary of Sections 10.4, 10.5, and 10.9 for isolated frames, and retrofit measures described in relevant commentary of Section 11.4 for masonry infills, may also be effective in retrofitting concrete frames with masonry infills. The design professional is referred to FEMA 308 (1998d) for further information in this regard. In addition, the following retrofit measures may be effective in rehabilitating concrete frames with infills:

1. **Posttensioning existing beams, columns, or joints using external posttensioned reinforcement**. Vertical posttensioning may be effective in increasing tensile capacity of columns acting as boundary zones. Anchorages should be located away from regions where inelastic action is anticipated and should be designed considering possible force variations caused by seismic forces.
2. **Modification of the element by selective material removal from the existing element**. Either the infill should be completely removed from the frame or gaps should be provided between the frame and the infill. In the latter case, the gap requirements of Chapter 11 should be satisfied.
3. **Changing the building system to reduce the demands on the existing element**. Examples include the addition of supplementary seismic-force-resisting elements such as walls, steel braces, or buttresses; seismic isolation; and mass reduction.

10.6.3 Concrete Frames with Concrete Infills

10.6.3.1 General The analytical model for a concrete frame with concrete infills shall represent the strength, stiffness, and deformation capacity of beams, slabs, columns, beam–column joints, concrete infills, and all connections and components of the elements. Potential failure in flexure, shear, anchorage, reinforcement development, or crushing at any section shall be considered. Interaction with nonstructural components shall be included.

The analytical model shall be established considering the relative stiffness and strength of the frame and the infill, as well as the level of deformations and associated damage. For low deformation levels, and for cases where the frame is relatively flexible, the infilled frame shall be permitted to be modeled as a shear wall, with openings modeled where they occur. In other cases, the frame-infill system shall be permitted to be modeled using a braced-frame analogy such as that described for concrete frames with masonry infills in Section 10.6.2.

Frame components shall be evaluated for forces imparted to them through interaction of the frame with the infill as specified in Chapter 11. In frames with full-height infills, the evaluation shall include the effect of strut compression forces applied to the column and beam eccentric from the beam–column joint. In frames with partial-height infills, the evaluation shall include the reduced effective length of the columns above the infilled portion of the bay.

In frames that have infills in some bays and no infills in other bays, the restraint of the infill shall be represented as described in this section, and the noninfilled bays shall be modeled as frames as specified in appropriate portions of Sections 10.4, 10.5, and 10.9. Where infills create a discontinuous wall, the effects of the discontinuity on overall building performance shall be evaluated.

10.6.3.2 Stiffness of Concrete Frames with Concrete Infills

10.6.3.2.1 Linear Static and Dynamic Procedures Effective stiffnesses shall be calculated according to the principles of Section 10.3.1.2.1 and the procedure of Section 10.6.2.2.1.

10.6.3.2.2 Nonlinear Static Procedure Nonlinear load-deformation relations for use in analysis by NSP shall follow the requirements of Section 10.3.1.2.2.

Monotonic load-deformation relations shall be according to the generalized relation shown in Fig. 10-1, except that different relations shall be permitted where verified by tests. Numerical quantities in Fig. 10-1 shall be derived from tests or by analysis procedures specified in Section 7.6 and shall take into account the interactions between frame and infill components. Alternatively, the procedure of Section 10.6.2.2.2 shall be permitted for the development of nonlinear modeling parameters for concrete frames with concrete infills.

10.6.3.2.3 Nonlinear Dynamic Procedure Nonlinear load-deformation relations for use in analysis by NDP shall model the complete hysteretic behavior of each component using proper-

ties verified by tests. Unloading and reloading properties shall represent stiffness and strength degradation characteristics.

10.6.3.3 Strength of Concrete Frames with Concrete Infills Strengths of reinforced concrete components shall be calculated according to the general requirements of Section 10.4.2, as modified by other specifications of this chapter. Strength calculations shall consider the following:

1. Limitations imposed by beams, columns, and joints in unfilled portions of frames;
2. Tensile and compressive capacity of columns acting as boundary components of infilled frames;
3. Local forces applied from the infill to the frame;
4. Strength of the infill; and
5. Connections with adjacent components.

Strengths of existing concrete infills shall be determined considering shear strength of the infill panel. For this calculation, procedures specified in Section 10.7.2.3 shall be used for calculation of the shear strength of a wall segment.

Where the frame and concrete infill are assumed to act as a monolithic wall, flexural strength shall be based on continuity of vertical reinforcement in both (1) the columns acting as boundary components and (2) the infill wall, including anchorage of the infill reinforcement in the boundary frame.

10.6.3.4 Acceptance Criteria for Concrete Frames with Concrete Infills The acceptance criteria for concrete frames with concrete infills shall comply with relevant acceptance criteria of Sections 10.6.2.4, 10.7, and 10.8.

10.6.3.5 Retrofit Measures for Concrete Frames with Concrete Infills Seismic retrofit measures for concrete frames with concrete infills shall meet the requirements of Section 10.3.7 and other provisions of this standard.

C10.6.3.5 Retrofit Measures for Concrete Frames with Concrete Infills Retrofit measures described in Section C10.6.2.5 for concrete frames with masonry infills may also be effective in rehabilitating concrete frames with concrete infills. In addition, application of shotcrete to the face of an existing wall to increase the thickness and shear strength may be effective. For this purpose, the face of the existing wall should be roughened, a mat of reinforcing steel should be doweled into the existing structure, and shotcrete should be applied to the desired thickness. The design professional is referred to FEMA 308 (1998d) for further information regarding retrofit of concrete frames with concrete infill.

10.7 CONCRETE SHEAR WALLS

10.7.1 Types of Concrete Shear Walls and Associated Components The provisions of Section 10.7 shall apply to all reinforced concrete shear walls in all types of structural systems that incorporate reinforced concrete shear walls. This set of types includes isolated shear walls, shear walls used in wall-frame systems, coupled shear walls, and discontinuous shear walls. Shear walls shall be permitted to be considered as solid walls if they have openings that do not significantly influence the strength or inelastic behavior of the wall. Perforated shear walls shall be defined as walls that have a regular pattern of openings in both horizontal and vertical directions that creates a series of wall pier and deep beam components referred to as wall segments.

Coupling beams shall comply with provisions of Section 10.7.2 and shall be exempted from the provisions for beams covered in Section 10.4.

C10.7.1 Types of Concrete Shear Walls and Associated Components Concrete shear walls are planar vertical elements or combinations of interconnected planar elements that serve as lateral-load-resisting elements in concrete structures. Shear walls (or wall segments) shall be considered slender if their aspect ratio (height/length) is >3.0 and shall be considered short or squat if their aspect ratio is <1.5. Slender shear walls are normally controlled by flexural behavior; short walls are normally controlled by shear behavior. The response of walls with intermediate aspect ratios is influenced by both flexure and shear.

Identification of component types in concrete shear wall elements depends, to some degree, on the relative strengths of the wall segments. Vertical segments are often termed wall piers, whereas horizontal segments may be called coupling beams or spandrels. The design professional is referred to FEMA 306 (1998b) for additional information regarding the behavior of concrete wall components. Selected information from FEMA 306 (1998b) has been reproduced in the commentary of this standard and in Table C10-2 and Fig. C10-3 to clarify wall component identification.

10.7.1.1 Monolithic Reinforced Concrete Shear Walls and Wall Segments Monolithic reinforced concrete shear walls shall consist of vertical cast-in-place elements, either uncoupled or coupled, in open or closed shapes. These walls shall have relatively continuous cross sections and reinforcement and shall provide both vertical and lateral force resistance, in contrast with infilled walls defined in Section 10.6.1.3.

Table C10-2. Reinforced Concrete Shear Wall Component Types

Component Type per FEMA 306 (1998b)		Description	ASCE 41 Designation
RC1	Isolated wall or stronger wall pier	Stronger than beam or spandrel components that may frame into it so that nonlinear behavior (and damage) is generally concentrated at the base, with a flexural plastic hinge or shear failure. Includes isolated (cantilever) walls. If the component has a major setback or cutoff of reinforcement above the base, this section should be also checked for nonlinear behavior.	Monolithic reinforced concrete wall or vertical wall segment
RC2	Weaker wall pier	Weaker than the spandrels to which it connects; characterized by flexural hinging top and bottom or shear failure.	
RC3	Weaker spandrel or coupling beam	Weaker than the wall piers to which it connects; characterized by hinging at each end, shear failure, or sliding shear failure.	Horizontal wall segment or coupling beam
RC4	Stronger spandrel	Should not suffer damage because it is stronger than attached wall piers. If this component is damaged, it should probably be reclassified as RC3.	
RC5	Pier-spandrel panel zone	Typically not a critical area in RC walls.	Wall segment

Source: FEMA 306 (1998b).

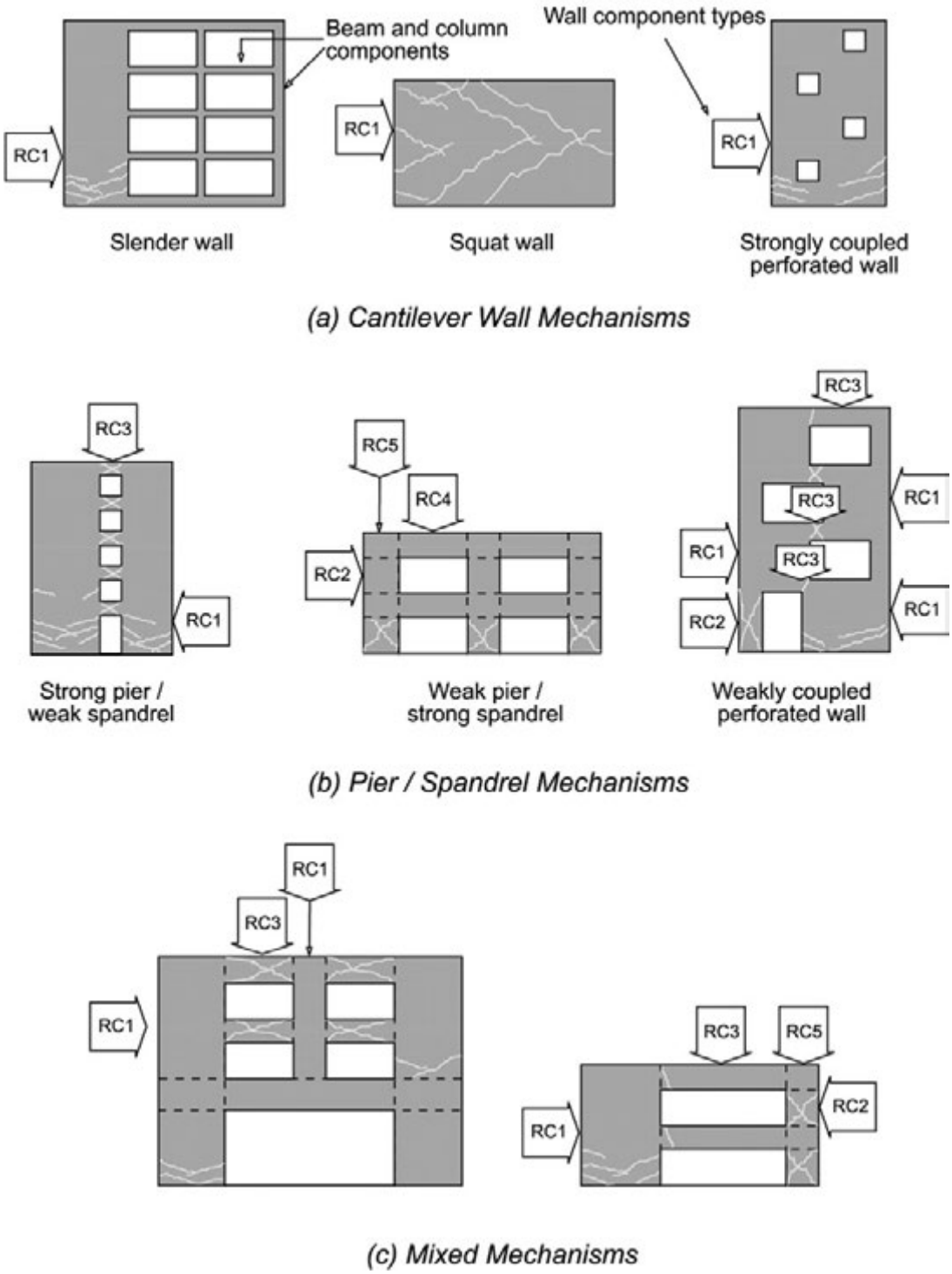

FIG. C10-3. Identification of Component Types in Concrete Shear Wall Elements Source: FEMA 306 (1998b).

Shear walls or wall segments with axial loads greater than 0.35 P_o shall not be considered effective in resisting seismic forces. For the purpose of determining effectiveness of shear walls or wall segments, the use of axial loads based on a limit state analysis shall be permitted.

C10.7.1.1 Monolithic Reinforced Concrete Shear Walls and Wall Segments The wall reinforcement is normally continuous in both the horizontal and vertical directions, and bars are typically lap-spliced for tension continuity. The reinforcement mesh may also contain horizontal ties around vertical bars that are concentrated either near the vertical edges of a wall with constant thickness or in boundary members formed at the wall edges. The amount and spacing of these ties is important for determining how well the concrete at the wall edge is confined and thus for determining the lateral deformation capacity of the wall.

In general, slender reinforced concrete shear walls are governed by flexure and tend to form a plastic flexural hinge near

the base of the wall under severe lateral loading. The ductility of the wall is a function of the percentage of longitudinal reinforcement concentrated near the boundaries of the wall, the level of axial load, the amount of lateral shear required to cause flexural yielding, and the thickness and reinforcement used in the web portion of the shear wall. In general, higher axial load stresses and higher shear stresses reduce the flexural ductility and energy-absorbing capability of the shear wall. Short or squat shear walls are normally governed by shear. These walls normally have a limited ability to deform beyond the elastic range and continue to resist seismic forces. Thus, these walls are typically analyzed either as displacement-controlled components with low ductility capacities or as force-controlled components.

10.7.1.2 Reinforced Concrete Columns Supporting Discontinuous Shear Walls Reinforced concrete columns supporting discontinuous shear walls shall be analyzed in accordance with the requirements of Section 10.4.2.

C10.7.1.2 Reinforced Concrete Columns Supporting Discontinuous Shear Walls In shear wall buildings, it is not uncommon to find that some walls are terminated either to create commercial space in the first story or to create parking spaces in the basement. In such cases, the walls are commonly supported by columns. Such designs are not recommended in seismic zones because very large demands may be placed on these columns during earthquake loading. In older buildings, such columns often have "standard" longitudinal and transverse reinforcement; the behavior of such columns during past earthquakes indicates that tightly spaced closed ties with well-anchored 135-degree hooks are required for the building to survive severe seismic forces.

10.7.1.3 Reinforced Concrete Coupling Beams Reinforced concrete coupling beams used to link two shear walls together shall be evaluated and rehabilitated to comply with the requirements of Section 10.7.2.

C10.7.1.3 Reinforced Concrete Coupling Beams Coupled walls are generally much stiffer and stronger than they would be if they acted independently. Coupling beams typically have a small span-to-depth ratio, and their inelastic behavior is normally affected by the high shear forces acting in these components. Coupling beams in most older reinforced concrete buildings commonly have "conventional" reinforcement that consists of longitudinal flexural steel and transverse steel for shear. In some more modern buildings, or in buildings where coupled shear walls are used for seismic retrofit, the coupling beams may use diagonal reinforcement as the primary reinforcement for both flexure and shear. The inelastic behavior of coupling beams that use diagonal reinforcement has been shown experimentally to be much better with respect to retention of strength, stiffness, and energy dissipation capacity than the observed behavior of coupling beams with conventional reinforcement.

10.7.2 Reinforced Concrete Shear Walls, Wall Segments, and Coupling Beams

10.7.2.1 General The analytical model for a shear wall element shall represent the stiffness, strength, and deformation capacity of the shear wall. Potential failure in flexure, shear, and reinforcement development at any point in the shear wall shall be considered. Interaction with other structural and nonstructural components shall be included.

Slender shear walls and wall segments shall be permitted to be modeled as equivalent beam–column elements that include both flexural and shear deformations. The flexural strength of beam–column elements shall include the interaction of axial load and bending. The rigid connection zone at beam connections to this equivalent beam–column element shall represent the distance from the wall centroid to the edge of the wall. Unsymmetrical wall sections shall be modeled with the different bending capacities for the two loading directions.

A beam element that incorporates both bending and shear deformations shall be used to model coupling beams. The element inelastic response shall account for the loss of shear strength and stiffness during reversed cyclic loading to large deformations. For coupling beams that have diagonal reinforcement satisfying ACI 318 requirements, a beam element representing flexure only shall be permitted.

The diaphragm action of concrete slabs that interconnect shear walls and frame columns shall be represented in the model.

C10.7.2.1 General For rectangular shear walls and wall segments with $h/l_w \leq 2.5$ and flanged wall sections with $h/l_w \leq 3.5$, either a modified beam–column analogy or a multiple-node, multiple-spring approach should be used. Because shear walls usually respond in single curvature over a story height, one multiple-spring element per story can be used for modeling shear walls. Wall segments should be modeled with either the beam–column element or with a multiple-spring model with two elements over the length of the wall segment.

Coupling beams that have diagonal reinforcement satisfying ACI 318 requirements commonly have a stable hysteretic response under large load reversals. Therefore, these members could adequately be modeled with beam elements used for typical frame analyses.

10.7.2.2 Stiffness of Reinforced Concrete Shear Walls, Wall Segments, and Coupling Beams The effective stiffness of all the elements discussed in Section 10.7 shall be defined based on the material properties, component dimensions, reinforcement quantities, boundary conditions, and current state of the member with respect to cracking and stress levels. Alternatively, use of values for effective stiffness given in Table 10-5 shall be permitted.

For coupling beams, the effective stiffness values given in Table 10-5 for nonprestressed beams shall be used unless alternative stiffnesses are determined by more detailed analysis.

10.7.2.2.1 Linear Static and Dynamic Procedures Shear walls and associated components shall be modeled considering axial, flexural, and shear stiffness. For closed and open wall shapes, such as box, T, L, I, and C sections, the effective tension or compression flange widths shall be as specified in Section 10.3.1.3. The calculated stiffnesses to be used in analysis shall be in accordance with the requirements of Section 10.3.1.2.

Joints between shear walls and frame elements shall be modeled as stiff components or rigid components, as appropriate.

10.7.2.2.2 Nonlinear Static Procedure Nonlinear load-deformation relations for use in analysis by nonlinear static and dynamic procedures shall comply with the requirements of Section 10.3.1.2.

Monotonic load-deformation relationships for analytical models that represent shear walls, wall elements, and coupling beams shall be in accordance with the generalized relation shown in Fig. 10-1.

For shear walls and wall segments that have inelastic behavior under lateral loading that is governed by flexure, the following approach shall be permitted. The load-deformation relationship in Fig. 10-1 shall be used with the x-axis of Fig. 10-1 taken as

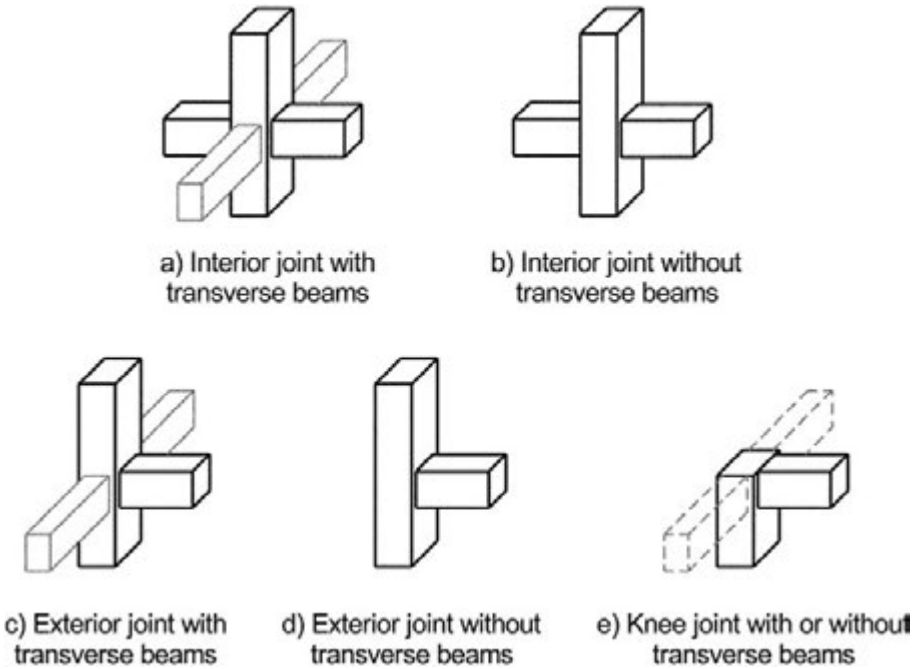

FIG. 10-3. Joint Classification (for Response in the Plane of the Page)

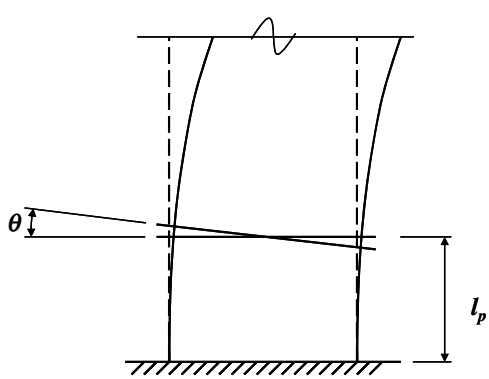

FIG. 10-4. Plastic Hinge Rotation in Shear Wall Where Flexure Dominates Inelastic Response

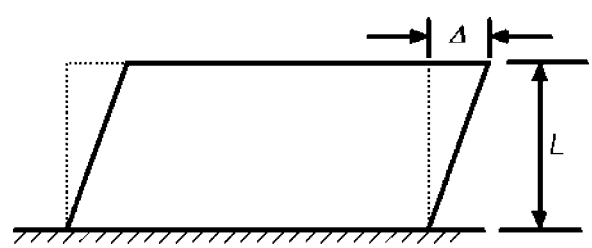

FIG. 10-5. Story Drift in Shear Wall where Shear Dominates Inelastic Response

the rotation over the plastic hinging region at the end of the member shown in Fig. 10-4. The hinge rotation at point B in Fig. 10-1 corresponds to the yield point, θ_y, and shall be calculated in accordance with Eq. (10-5):

$$\theta_y = \left(\frac{M_y}{E_c I}\right) l_p \qquad (10\text{-}5)$$

where M_y = Yield moment capacity of the shear wall or wall segment;
E_c = Concrete modulus;
I = Member moment of inertia; and
l_p = Assumed plastic hinge length.

For analytical models of shear walls and wall segments, the value of l_p shall be set equal to 0.5 times the flexural depth of the element but less than one story height for shear walls and less than 50% of the element length for wall segments.

Values for the variables *a, b*, and *c* required to define the location of points C, D, and E in Fig. 10-1(a) shall be as specified in Table 10-19.

For shear walls and wall segments whose inelastic response is controlled by shear, the following approach shall be permitted. The load-deformation relationship in Fig. 10-1(c) shall be used, with the *x*-axis of Fig. 10-1(c) taken as the lateral drift ratio. Alternatively, the load-deformation relationship in Fig. 10-1(b) shall be permitted, with the *x*-axis of Fig. 10-1(b) taken as the lateral drift ratio. For shear walls, this drift shall be the story drift, as shown in Fig. 10-5. For wall segments, Fig. 10-5 shall represent the member drift.

For coupling beams, the following approach shall be permitted. The load-deformation relationship in Fig. 10-1(b) shall be used, with the *x*-axis of Fig. 10-1(b) taken as the chord rotation as defined in Fig. 10-6.

Values for the variables *d, e, f, g*, and *c* required to find the points B, C, D, E, and F in Fig. 10-1(b) or 10-1(c) shall be as specified in Table 10-20 for the appropriate members. Linear interpolation between tabulated values shall be used if the member under analysis has conditions that are between the limits given in the tables.

C10.7.2.2.2 Nonlinear Static Procedure The recommended backbone shape and parameters provided for concrete shear walls differs from the general backbone description in Chapter 7. For walls with shear span-to depth ratios below 2.5, the load-deformation relationship in Fig. 10-1(c) provides a better representation of the behavior than that in Fig. 10-1(b). The reason is

Table 10-19. Modeling Parameters and Numerical Acceptance Criteria for Nonlinear Procedures—R/C Shear Walls and Associated Components Controlled by Flexure

Conditions			Plastic Hinge Rotation (radians)		Residual Strength Ratio	Acceptable Plastic Hinge Rotation[a] (radians) Performance Level		
			a	*b*	*c*	IO	LS	CP
i. Shear walls and wall segments								
$\frac{(A_s - A_s')f_y + P}{t_w l_w f_c'}$	$\frac{V}{t_w l_w \sqrt{f_c'}}$	Confined Boundary[b]	0.015					
≤0.1	≤4	Yes	0.010	0.020	0.75	0.005	0.015	0.020
≤0.1	≥6	Yes	0.009	0.015	0.40	0.004	0.010	0.015
≥0.25	≤4	Yes	0.005	0.012	0.60	0.003	0.009	0.012
≥0.25	≥6	Yes	0.008	0.010	0.30	0.0015	0.005	0.010
≤0.1	≤4	No	0.006	0.015	0.60	0.002	0.008	0.015
≤0.1	≥6	No	0.003	0.010	0.30	0.002	0.006	0.010
≥0.25	≤4	No	0.002	0.005	0.25	0.001	0.003	0.005
≥0.25	≥6	No	0.002	0.004	0.20	0.001	0.002	0.004
ii. Shear wall coupling beams[c]								
Longitudinal reinforcement and transverse reinforcement[d]		$\frac{V}{t_w l_w \sqrt{f_c'}}$		0.050				
Conventional longitudinal reinforcement with conforming transverse reinforcement		≤3	0.025	0.040	0.75	0.010	0.025	0.050
		≥6	0.020	0.035	0.50	0.005	0.020	0.040
Conventional longitudinal reinforcement with nonconforming transverse reinforcement		≤3	0.020	0.025	0.50	0.006	0.020	0.035
		≥6	0.010	0.050	0.25	0.005	0.010	0.025
Diagonal reinforcement		NA	0.030	0.050	0.80	0.006	0.030	0.050

[a]Linear interpolation between values listed in the table shall be permitted.
[b]A boundary element shall be considered confined where transverse reinforcement exceeds 75% of the requirements given in ACI 318 and spacing of transverse reinforcement does not exceed $8d_b$. It shall be permitted to take modeling parameters and acceptance criteria as 80% of confined values where boundary elements have at least 50% of the requirements given in ACI 318 and spacing of transverse reinforcement does not exceed $8d_b$. Otherwise, boundary elements shall be considered not confined.
[c]For coupling beams spanning <8 ft 0 in., with bottom reinforcement continuous into the supporting walls, acceptance criteria values shall be permitted to be doubled for LS and CP performance.
[d]Conventional longitudinal reinforcement consists of top and bottom steel parallel to the longitudinal axis of the coupling beam. Conforming transverse reinforcement consists of (a) closed stirrups over the entire length of the coupling beam at a spacing ≤ $d/3$, and (b) strength of closed stirrups $V_s \geq 3/4$ of required shear strength of the coupling beam.

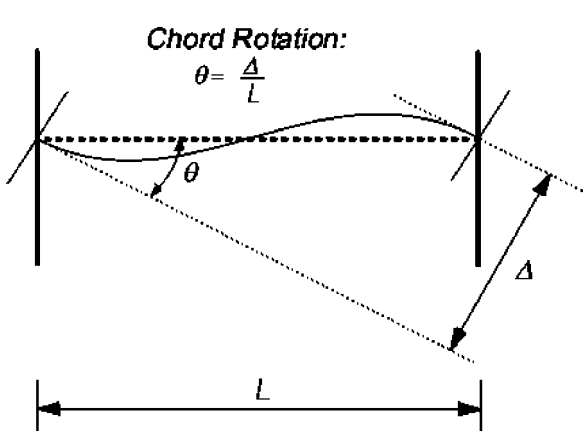

FIG. 10-6. Chord Rotation for Shear Wall Coupling Beams

that in walls with low shear-span-to-depth ratios the deformations related to shear are not negligible compared with the deformations related to flexure. The proposed relationship is based on a model in which the total deflection is calculated as the sum of contributions of components related to flexure, shear, and slip of the reinforcement. The drift ratio and shear force corresponding to inclined cracking in Fig. 10-1(c) were obtained by simplifying expressions for principal stresses for a limiting concrete tensile strength of approximately $4\sqrt{f_c'}$ (Sozen and Moehle 1993). Definition of the yield point and the lateral strength degradation point are based on limited test data (e.g., Hidalgo et al. 2002), as summarized by Wallace in the PEER/EERI seminar, "New Information on Seismic Performance of Concrete Buildings" (PEER/EERI 2006). Note that variables F, g, and f in Fig. 10-1(c) are not the same as those used in Chapter 7. Further discussion on the development of this backbone model is provided in Elwood et al. (2007).

10.7.2.2.3 Nonlinear Dynamic Procedure For the NDP, the complete hysteretic behavior of each component shall be modeled using properties verified by experimental evidence. Use of the generalized load-deformation relation shown in Fig. 10-1 to represent the envelope relation for the analysis shall be permitted. The unloading and reloading stiffnesses and strengths, and any pinching of the load-versus-rotation hysteresis loops, shall reflect the behavior experimentally observed for wall elements similar to the one under investigation.

10.7.2.3 Strength of Reinforced Concrete Shear Walls, Wall Segments, and Coupling Beams Component strengths shall be computed according to the general requirements of Section 10.3.2, with the additional requirements of this section. Strength shall be determined considering the potential for failure in

Table 10-20. Modeling Parameters and Numerical Acceptance Criteria for Nonlinear Procedures—R/C Shear Walls and Associated Components Controlled by Shear

Conditions		Total Drift Ratio (%), or Chord Rotation (radians)[a]			Strength Ratio		Acceptable Total Drift (%) or Chord Rotation (radians)[a] Performance Level		
		d	*e*	*g*	*c*	*f*	IO	LS	CP
i. Shear walls and wall segments[b]									
$\frac{(A_s - A_s')f_y + P}{t_w l_w f_c'} \le 0.05$		1.0	2.0	0.4	0.20	0.6	0.40	1.5	2.0
$\frac{(A_s - A_s')f_y + P}{t_w l_w f_c'} > 0.05$		0.75	1.0	0.4	0.0	0.6	0.40	0.75	1.0
ii. Shear wall coupling beams[c]									
Longitudinal reinforcement and transverse reinforcement[d]	$\frac{V}{t_w l_w \sqrt{f_c'}}$								
Conventional longitudinal reinforcement with conforming transverse reinforcement	≤3	0.02	0.030		0.60		0.006	0.020	0.030
	≥6	0.016	0.024		0.30		0.005	0.016	0.024
Conventional longitudinal reinforcement with nonconforming transverse reinforcement	≤3	0.012	0.025		0.40		0.006	0.010	0.020
	≥6	0.008	0.014		0.20		0.004	0.007	0.012

[a]For shear walls and wall segments, use drift; for coupling beams, use chord rotation; refer to Figures 10-5 and 10-6.
[b]For shear walls and wall segments where inelastic behavior is governed by shear, the axial load on the member must be $\le 0.15A_g f_c'$; otherwise, the member must be treated as a force-controlled component.
[d]Conventional longitudinal reinforcement consists of top and bottom steel parallel to the longitudinal axis of the coupling beam. Conforming transverse reinforcement consists of (a) closed stirrups over the entire length of the coupling beam at a spacing $\le d/3$ and (b) strength of closed stirrups $V_s \ge 3/4$ of required shear strength of the coupling beam.
[c]For coupling beams spanning <8 ft 0 in., with bottom reinforcement continuous into the supporting walls, acceptance criteria values shall be permitted to be doubled for LS and CP performance.

flexure, shear, or development under combined gravity and lateral load.

Nominal flexural strength of shear walls or wall segments, M_n, shall be determined using the fundamental principles given in Chapter 10 of ACI 318. For calculation of nominal flexural strength, the effective compression and tension flange widths defined in Section 10.7.2.2 shall be used, except that the first limit shall be changed to one-tenth of the wall height. Where determining the flexural yield strength of a shear wall, as represented by point B in Fig. 10-1(a), only the longitudinal steel in the boundary of the wall shall be included. If the wall does not have a boundary member, then only the longitudinal steel in the outer 25% of the wall section shall be included in the calculation of the yield strength. Where calculating the nominal flexural strength of the wall, as represented by point C in Fig. 10-1(a), all longitudinal steel (including web reinforcement) shall be included in the calculation. For all moment strength calculations, the strength of the longitudinal reinforcement shall be taken as the expected yield strength to account for material overstrength and strain hardening, and the axial load acting on the wall shall include gravity loads, as defined in Section 7.2.2.

The nominal shear strength of a shear wall or wall segment, V_n, shall be determined based on the principles and equations given in Chapter 21 of ACI 318, except that the restriction on spacing, reinforcement ratio, and the number of curtains of reinforcement shall not apply to existing walls. There shall be no difference between the yield and nominal shear strengths, as represented by points B and C in Fig. 10-1.

Where an existing shear wall or wall segment has a transverse reinforcement percentage, ρ_n, less than 0.0015, the wall shall be considered force-controlled.

Splice lengths for primary longitudinal reinforcement shall be evaluated using the procedures given in Section 10.3.5. Reduced flexural strengths shall be evaluated at locations where splices govern the usable stress in the reinforcement. The need for confinement reinforcement in shear wall boundary members shall be evaluated by the procedure in ACI 318 or other approved procedure.

The nominal flexural and shear strengths of coupling beams shall be evaluated using the principles and equations contained in Chapter 21 of ACI 318. The expected strength of longitudinal or diagonal reinforcement shall be used.

C10.7.2.3 Strength of Reinforced Concrete Shear Walls, Wall Segments, and Coupling Beams Data presented by Wood (1990) indicate that wall strength is insensitive to the quantity of transverse reinforcement where it drops below a steel ratio of 0.0015.

The need for confinement reinforcement in shear wall boundary members may be evaluated by the method recommended by Wallace (1994 and 1995) for determining maximum lateral deformations in the wall and the resulting maximum compression strains in the wall boundary.

Strength calculations based on ACI 318, excluding Chapter 22, assume a maximum spacing of wall reinforcement. No data are available to justify performance for walls that do not meet the maximum spacing requirements. If plain concrete is encountered in an existing building, Chapter 22 of ACI 318 can be used to derive capacities, and Section 7.6 of this standard can be used to develop acceptance criteria.

Chapter 21 of ACI 318 requires that at least two curtains of reinforcement be used in a wall if V_u exceeds $2A_{cv}\sqrt{f_c'}$. Experimental results by Hidalgo et al. (2002) show that for relatively thin walls there is no significant difference between the strength of walls with one or two curtains of web reinforcement (Elwood et al. 2007).

10.7.2.4 Acceptance Criteria for Reinforced Concrete Shear Walls, Wall Segments, and Coupling Beams

10.7.2.4.1 Linear Static and Dynamic Procedures Shear walls, wall segments, and coupling beams shall be classified as either deformation or force controlled, as defined in Section 7.5.1. In

these components, deformation-controlled actions shall be restricted to flexure or shear. All other actions shall be treated as force controlled.

The nominal flexural strength of a shear wall or wall segment shall be used to determine the maximum shear force in shear walls and wall segments. For cantilever shear walls, the design shear force shall be equal to the magnitude of the lateral force required to develop the nominal flexural strength at the base of the wall, assuming that the lateral force is distributed uniformly over the height of the wall. For wall segments, the design force shall be equal to the shear corresponding to the development of the positive and negative nominal moment strengths at opposite ends of the wall segment.

Design actions (flexure, shear, axial, or force transfer at rebar anchorages and splices) on components shall be determined as prescribed in Chapter 7. Where determining the appropriate value for the design actions, proper consideration shall be given to gravity loads and to the maximum forces that can be transmitted considering nonlinear action in adjacent components. Design actions shall be compared with design strengths in accordance with Section 7.5.2.2. Tables 10-21 and 10-22 specify *m*-factors for use in Eq. (7-36). Alternate *m*-factors shall be permitted where justified by experimental evidence and analysis.

C10.7.2.4.1 Linear Static and Dynamic Procedures For shear-controlled coupling beams, ductility is a function of the shear in the member as determined by the expected shear capacity of the member. In accordance with Section 10.3.2, expected strengths are calculated using the procedures specified in ACI 318 . For coupling beams, V_c is nearly always zero.

10.7.2.4.2 Nonlinear Static and Dynamic Procedures In the design model, inelastic response shall be restricted to those components and actions listed in Tables 10-19 and 10-20, except where it is demonstrated that other inelastic actions are justified for the selected performance levels. For members experiencing inelastic behavior, the magnitude of other actions (forces, moments, or torque) in the member shall correspond to the magnitude of the action causing inelastic behavior. The magnitude of these other actions shall be shown to be below their nominal capacities.

Components experiencing inelastic response shall satisfy the requirements of Section 7.5.3.2, and the maximum plastic hinge

Table 10-21. Numerical Acceptance Criteria for Linear Procedures—R/C Shear Walls and Associated Components Controlled by Flexure

			m-Factors[a]				
			Performance Level				
				Component Type			
				Primary		Secondary	
Conditions			IO	LS	CP	LS	CP
i. Shear walls and wall segments							
$\frac{(A_s - A_s')f_y + P}{t_w l_w f_c'}$ [b]	$\frac{V}{t_w l_w \sqrt{f_c'}}$ [c]	Confined Boundary[d]					
≤0.1	≤4	Yes	2	4	6	6	8
≤0.1	≥6	Yes	2	3	4	4	6
≥0.25	≤4	Yes	1.5	3	4	4	6
≥0.25	≥6	Yes	1.25	2	2.5	2.5	4
≤0.1	≤4	No	2	2.5	4	4	6
≤0.1	≥6	No	1.5	2	2.5	2.5	4
≥0.25	≤4	No	1.25	1.5	2	2	3
≥0.25	≥6	No	1.25	1.5	1.75	1.75	2
ii. Shear wall coupling beams[e]							
Longitudinal reinforcement and transverse reinforcement[f]		$\frac{V}{t_w l_w \sqrt{f_c'}}$ [c]					
Conventional longitudinal reinforcement with conforming transverse reinforcement		≤3	2	4	6	6	9
		≥6	1.5	3	4	4	7
Conventional longitudinal reinforcement with nonconforming transverse reinforcement		≤3	1.5	3.5	5	5	8
		≥6	1.2	1.8	2.5	2.5	4
Diagonal reinforcement		NA	2	5	7	7	10

[a]Linear interpolation between values listed in the table shall be permitted.
[b]P is the design axial force in the member. Alternatively, use of axial loads determined based on a limit state analysis shall be permitted.
[c]V is the design shear force calculated using limit-state analysis procedures in accordance with Section 10.7.2.4.
[d]A boundary element shall be considered confined where transverse reinforcement exceeds 75% of the requirements given in ACI 318 and spacing of transverse reinforcement does not exceed $8d_b$. It shall be permitted to take modeling parameters and acceptance criteria as 80% of confined values where boundary elements have at least 50% of the requirements given in ACI 318 and spacing of transverse reinforcement does not exceed $8d_b$. Otherwise, boundary elements shall be considered not confined.
[e]For secondary coupling beams spanning <8 ft 0 in., with bottom reinforcement continuous into the supporting walls, secondary values shall be permitted to be doubled.
[f]Conventional longitudinal reinforcement consists of top and bottom steel parallel to the longitudinal axis of the coupling beam. Conforming transverse reinforcement consists of (a) closed stirrups over the entire length of the coupling beam at a spacing ≤ $d/3$, and (b) strength of closed stirrups $V_s \geq 3/4$ of required shear strength of the coupling beam.

Table 10-22. Numerical Acceptance Criteria for Linear Procedures—R/C Shear Walls and Associated Components Controlled by Shear

		m-Factors				
		Performance Level				
			Component Type			
			Primary		Secondary	
Conditions		IO	LS	CP	LS	CP
i. Shear walls and wall segments[a]						
$\frac{(A_s - A_s')f_y + P}{t_w l_w f_c'} \le 0.05$		2	2.5	3	4.5	6
$\frac{(A_s - A_s')f_y + P}{t_w l_w f_c'} > 0.05$		1.5	2	3	3	4
ii. Shear wall coupling beams[b]						
Longitudinal reinforcement and transverse reinforcement[c]	$\frac{V}{t_w l_w \sqrt{f_c'}}$[d]					
Conventional longitudinal reinforcement with conforming transverse reinforcement	≤ 3	1.5	3	4	4	6
	≥ 6	1.2	2	2.5	2.5	3.5
Conventional longitudinal reinforcement with nonconforming transverse reinforcement	≤ 3	1.5	2.5	3	3	4
	≥ 6	1.2	1.2	1.5	1.5	2.5

[a]The shear shall be considered to be a force-controlled action for shear walls and wall segments where inelastic behavior is governed by shear and the design axial load is greater than $0.15A_g f_c'$. It shall be permitted to calculate the axial load based on a limit state analysis.
[b]For secondary coupling beams spanning <8'-0", with bottom reinforcement continuous into the supporting walls, secondary values shall be permitted to be doubled.
[c]Conventional longitudinal reinforcement consists of top and bottom steel parallel to the longitudinal axis of the coupling beam. Conforming transverse reinforcement consists of: (a) closed stirrups over the entire length of the coupling beam at a spacing ≤ *d*/3, and (b) strength of closed stirrups $V_s \ge 3/4$ of required shear strength of the coupling beam.
[d]V is the design shear force calculated using limit-state analysis procedures in accordance with Section 10.7.2.4.1.

rotations, drifts, or chord rotation angles shall not exceed the values given in Tables 10-19 and 10-20 for the selected Performance Level. Linear interpolation between tabulated values shall be used if the member under analysis has conditions that are between the limits given in the tables.

10.7.2.5 Retrofit Measures for Reinforced Concrete Shear Walls, Wall Segments, and Coupling Beams Seismic retrofit measures for reinforced concrete shear walls, wall segments, coupling beams, and columns supporting discontinuous shear walls shall meet the requirements of Section 10.3.7 and other provisions of this standard.

C10.7.2.5 Retrofit Measures for Reinforced Concrete Shear Walls, Wall Segments, and Coupling Beams The following measures may be effective in retrofitting reinforced shear walls, wall segments, coupling beams, and reinforced concrete columns supporting discontinuous shear walls:

1. **Addition of wall boundary components**. Addition of boundary components may be an effective measure in strengthening shear walls or wall segments that have insufficient flexural strength. These members may be either cast-in-place reinforced concrete components or steel sections. In both cases, proper connections should be made between the existing wall and the added components. The shear capacity of the retrofitted wall should be reevaluated.
2. **Addition of confinement jackets at wall boundaries**. Increasing the confinement at the wall boundaries by the addition of a steel or reinforced concrete jacket may be an effective measure in improving the flexural deformation capacity of a shear wall. For both types of jackets, the longitudinal steel should not be continuous from story to story unless the jacket is also being used to increase the flexural capacity. The minimum thickness for a concrete jacket should be 3 in. Carbon fiber wrap should be permitted for improving the confinement of concrete in compression.
3. **Reduction of flexural strength**. Reduction in the flexural capacity of a shear wall to change the governing failure mode from shear to flexure may be an effective retrofit measure. It may be accomplished by saw-cutting a specified number of longitudinal bars near the edges of the shear wall.
4. **Increased shear strength of wall**. Increasing the shear strength of the web of a shear wall by casting additional reinforced concrete adjacent to the wall web may be an effective retrofit measure. The new concrete should be at least 4 in. thick and should contain horizontal and vertical reinforcement. The new concrete should be properly bonded to the existing web of the shear wall. The use of carbon fiber sheets, epoxied to the concrete surface, should also be permitted to increase the shear capacity of a shear wall.
5. **Confinement jackets to improve deformation capacity of coupling beams and columns supporting discontinuous shear walls**. The use of confinement jackets specified above as a retrofit measure for wall boundaries, and in Section 10.4 for frame elements, may also be effective in increasing both the shear capacity and the deformation capacity of coupling beams and columns supporting discontinuous shear walls.
6. **Infilling between columns supporting discontinuous shear walls**. Where a discontinuous shear wall is supported on columns that lack either sufficient strength or deformation capacity to satisfy design criteria, making the wall

continuous by infilling the opening between these columns may be an effective retrofit measure. The infill and existing columns should be designed to satisfy all the requirements for new wall construction, including any strengthening of the existing columns required by adding a concrete or steel jacket for strength and increased confinement. The opening below a discontinuous shear wall should also be permitted to be "infilled" with steel bracing. The bracing members should be sized to satisfy all design requirements, and the columns should be strengthened with a steel or a reinforced concrete jacket.

All of the above retrofit measures require an evaluation of the wall foundation, diaphragms, and connections between existing structural elements and any elements added for retrofit purposes.

10.8 PRECAST CONCRETE SHEAR WALLS

10.8.1 Types of Precast Shear Walls Precast concrete shear walls shall consist of story-high or half-story-high precast wall segments that are made continuous through the use of either mechanical connectors or reinforcement splicing techniques with or without a cast-in-place connection strip. Connections between precast segments shall be permitted along both the horizontal and vertical edges of a wall segment.

The following types of precast shear walls are addressed in Section 10.8:

1. Effectively monolithic construction, defined as construction in which the reinforcement connections are made to be stronger than the adjacent precast panels so that the lateral load response of the precast wall system is comparable to that for monolithic shear walls;
2. Jointed construction, defined as construction in which inelastic action is permitted to occur at the connections between precast panels; and
3. Tilt-up construction, defined as a special technique for precast wall construction where there are vertical joints between adjacent panels and horizontal joints at the foundation level, and where the roof or floor diaphragm connects with the tilt-up panel.

10.8.1.1 Effectively Monolithic Construction For this type of precast wall, the connections between precast wall elements are designed and detailed to be stronger than the panels they connect. Precast shear walls and wall segments of effectively monolithic construction shall be evaluated by the criteria defined in Section 10.7.

C10.8.1.1 Effectively Monolithic Construction When the precast shear wall is subjected to lateral loading, any yielding and inelastic behavior should take place in the panel elements away from the connections. If the reinforcement detailing in the panel is similar to that for cast-in-place shear walls, then the inelastic response of a precast shear wall should be similar to that for a cast-in-place wall.

Modern building codes permit the use of precast shear wall construction in high seismic zones if it satisfies the criteria for cast-in-place shear wall construction.

10.8.1.2 Jointed Construction Precast shear walls and wall segments of jointed construction shall be evaluated by the criteria defined in Section 10.8.2.

C10.8.1.2 Jointed Construction For most older structures that contain precast shear walls, and for some modern construction, inelastic activity can be expected in the connections between precast wall panels during severe lateral loading. Because joints between precast shear walls in older buildings have often exhibited brittle behavior during inelastic load reversals, jointed construction was not permitted in high seismic zones. Therefore, where evaluating older buildings that contain precast shear walls that are likely to respond as jointed construction, the permissible ductilities and rotation capacities given in Section 10.7 should be reduced.

For some modern structures, precast shear walls have been constructed with special connectors that are detailed to exhibit ductile response and energy absorption characteristics. Many of these connectors are proprietary, and only limited experimental evidence concerning their inelastic behavior is available. Although this type of construction is clearly safer than jointed construction in older buildings, the experimental evidence is not sufficient to permit the use of the same ductility and rotation capacities given for cast-in-place construction. Thus, the permissible values given in Section 10.7 should be reduced.

Section 9.6 of FEMA 450 (2004) provides testing criteria that may be used to validate design values consistent with the highest performance of monolithic shear wall construction.

10.8.1.3 Tilt-Up Construction Shear walls and wall segments of tilt-up type of precast walls shall be evaluated by the criteria defined in Section 10.8.2.

C10.8.1.3 Tilt-Up Construction Tilt-up construction should be considered to be a special case of jointed construction. The walls for most buildings constructed by the tilt-up method are longer than their height. Shear would usually govern their in-plane design, except where there are significant openings in the wall panels, for example, door openings at loading dock areas of warehouses. The major concern for most tilt-up construction is the connection between the tilt-up wall and the roof diaphragm. That connection should be analyzed carefully to be sure the diaphragm forces can be transmitted safely to the precast wall system.

10.8.2 Precast Concrete Shear Walls and Wall Segments

10.8.2.1 General The analytical model for a precast concrete shear wall or wall segment shall represent the stiffness, strength, and deformation capacity of the overall member, as well as the connections and joints between any precast panel components that compose the wall. Potential failure in flexure, shear, and reinforcement development at any point in the shear wall panels or connections shall be considered. Interaction with other structural and nonstructural components shall be included.

Modeling of precast concrete shear walls and wall segments within the precast panels as equivalent beam–columns that include both flexural and shear deformations shall be permitted. The rigid-connection zone at beam connections to these equivalent beam–columns shall represent the distance from the wall centroid to the edge of the wall or wall segment. The different bending capacities for the two loading directions of unsymmetrical precast wall sections shall be modeled.

For precast shear walls and wall segments where shear deformations have a more significant effect on behavior than flexural deformation, a multiple spring model shall be used.

The diaphragm action of concrete slabs interconnecting precast shear walls and frame columns shall be represented in the model.

10.8.2.2 Stiffness of Precast Concrete Shear Walls and Wall Segments The modeling assumptions defined in Section 10.7.2.2 for monolithic concrete shear walls and wall segments shall also be used for precast concrete walls. In addition, the analytical

model shall model the axial, shear, and rotational deformations of the connections between the precast components that compose the wall by either softening the model used to represent the precast panels or by adding spring elements between panels.

10.8.2.2.1 Linear Static and Dynamic Procedures The modeling procedures given in Section 10.7.2.2.1, combined with a procedure for including connection deformations as noted above, shall be used.

10.8.2.2.2 Nonlinear Static Procedure Nonlinear load-deformation relations shall comply with the requirements of Section 10.3.1.2. The monotonic load-deformation relationships for analytical models that represent precast shear walls and wall elements within precast panels shall be in accordance with the generalized relation shown in Fig. 10-1, except that alternative approaches shall be permitted where verified by experiments. Where the relations are according to Fig. 10-1, the following approach shall be permitted.

Values for plastic hinge rotations or drifts at points B, C, and E for the two general shapes shall be as defined below. The strength levels at points B and C shall correspond to the yield strength and nominal strength as defined in Section 10.7.2.3. The residual strength for the line segment D–E shall be as defined below.

For precast shear walls and wall segments whose inelastic behavior under lateral loading is governed by flexure, the general load-deformation relationship shall be defined as in Fig. 10-1(a). For these members, the *x*-axis of Fig. 10-1(a) shall be taken as the rotation over the plastic hinging region at the end of the member, as shown in Fig. 10-2. If the requirements for effectively monolithic construction are satisfied, the value of the hinge rotation at point B shall correspond to the yield rotation, θ_y, and shall be calculated by Eq. (10-5). The same expression shall also be used for wall segments within a precast panel if flexure controls the inelastic response of the segment. If the precast wall is of jointed construction and flexure governs the inelastic response of the member, then the value of θ_y shall be increased to account for rotation in the joints between panels or between the panel and the foundation.

For precast shear walls and wall segments whose inelastic behavior under lateral loading is governed by shear, the general load-deformation relationship shall be defined as in Fig. 10-1(b). For these members, the *x*-axis of Fig. 10-1(b) shall be taken as the story drift for shear walls and as the element drift for wall segments, as shown in Fig. 10-3.

For effectively monolithic construction, the values for the variables *a, b*, and *c*, required to define the location of points C, D, and E in Fig. 10-1(a), shall be as specified in Table 10-19. For construction classified as jointed construction, the values of *a, b*, and *c* specified in Table 10-19 shall be reduced to 50% of the given values, unless experimental evidence is available to justify higher values. In no case, however, shall values larger than those specified in Table 10-19 be used.

For effectively monolithic construction, values for the variables *d, e*, and *c*, required to find the points C, D, and E in Fig. 10-1(b), shall be as specified in Table 10-20 for the appropriate member conditions. For construction classified as jointed construction, the values of *d*, *e*, and *c* specified in Table 10-20 shall be reduced to 50% of the specified values unless experimental evidence is available to justify higher values. In no case, however, shall values larger than those specified in Table 10-20 be used.

For Tables 10-19 and 10-20, linear interpolation between tabulated values shall be permitted if the member under analysis has conditions that are between the limits given in the tables.

10.8.2.2.3 Nonlinear Dynamic Procedure Nonlinear load-deformation relations for use in analysis by NDP shall model the complete hysteretic behavior of each component using properties verified by experimental evidence. The generalized relation shown in Fig. 10-1 shall be taken to represent the envelope for the analysis. The unloading and reloading stiffnesses and strengths, and any pinching of the load versus rotation hysteresis loops, shall reflect the behavior experimentally observed for wall elements similar to the one under investigation.

10.8.2.3 Strength of Precast Concrete Shear Walls and Wall Segments The strength of precast concrete shear walls and wall segments within the panels shall be computed according to the general requirement of Section 10.3.2, except as modified here. For effectively monolithic construction, the strength calculation procedures given in Section 10.7.2.3 shall be followed.

For jointed construction, calculations of axial, shear, and flexural strength of the connections between panels shall be based on fundamental principles of structural mechanics. Expected yield strength for steel reinforcement of connection hardware used in the connections shall be used where calculating the axial and flexural strength of the connection region. The unmodified specified yield strength of the reinforcement and connection hardware shall be used where calculating the shear strength of the connection region.

For all precast concrete shear walls of jointed construction, no difference shall be taken between the computed yield and nominal strengths in flexure and shear. The values for strength represented by the points B and C in Fig. 10-1 shall be computed following the procedures given in Section 10.7.2.3.

C10.8.2.3 Strength of Precast Concrete Shear Walls and Wall Segments In older construction, particular attention must be given to the technique used for splicing reinforcement extending from adjacent panels into the connection. These connections may be insufficient and often can govern the strength of the precast shear wall system.

10.8.2.4 Acceptance Criteria for Precast Concrete Shear Walls and Wall Segments The acceptance criteria for precast concrete shear walls shall be per Section 10.8.2.4.1 or 10.8.2.4.2 or by other approved methods.

C10.8.2.4 Acceptance Criteria for Precast Concrete Shear Walls and Wall Segments The procedures outlined in Section 9.6 of FEMA 450 (2004) may be used to establish acceptance criteria for precast shear walls.

10.8.2.4.1 Linear Static and Dynamic Procedures For precast shear wall construction that is effectively monolithic and for wall segments within a precast panel, the acceptance criteria defined in Section 10.7.2.4.1 shall be followed. For precast shear wall construction defined as jointed construction, the acceptance criteria procedure given in Section 10.7.2.4.1 shall be followed; however, the *m*-factors specified in Tables 10-21 and 10-22 shall be reduced by 50%, unless experimental evidence justifies the use of a larger value. An *m*-factor need not be taken as less than 1.0 and in no case shall be taken as larger than the values specified in these tables.

10.8.2.4.2 Nonlinear Static and Dynamic Procedures Inelastic response shall be restricted to those shear walls (and wall segments) and actions listed in Tables 10-19 and 10-20, except where it is demonstrated by experimental evidence and analysis that other inelastic action is acceptable for the selected Performance Levels. For components experiencing inelastic behavior, the magnitude of the other actions (forces, moments, or torques) in

the component shall correspond to the magnitude of the action causing the inelastic behavior. The magnitude of these other actions shall be shown to be below their nominal capacities.

For precast shear walls that are effectively monolithic and wall segments within a precast panel, the maximum plastic hinge rotation angles or drifts during inelastic response shall not exceed the values specified in Tables 10-19 and 10-20. For precast shear walls of jointed construction, the maximum plastic hinge rotation angles or drifts during inelastic response shall not exceed one-half of the values specified in Tables 10-19 and 10-20 unless experimental evidence justifies a higher value. However, in no case shall deformation values larger than those specified in these tables be used for jointed type construction.

Alternative approaches or values shall be permitted where justified by experimental evidence and analysis.

10.8.2.5 Retrofit Measures for Precast Concrete Shear Walls and Wall Segments Seismic retrofit measures for precast concrete shear walls and wall segments shall meet the requirements of Section 10.3.7 and other provisions of this standard.

C10.8.2.5 Retrofit Measures for Precast Concrete Shear Walls and Wall Segments Precast concrete shear wall systems may suffer from some of the same deficiencies as cast-in-place walls. These deficiencies include inadequate flexural capacity, inadequate shear capacity with respect to flexural capacity, lack of confinement at wall boundaries, and inadequate splice lengths for longitudinal reinforcement in wall boundaries. A few deficiencies unique to precast wall construction are inadequate connections between panels, to the foundation, and to floor or roof diaphragms.

The retrofit measures described in Section 10.7.2.5 may be effective in retrofitting precast concrete shear walls. In addition, the following retrofit measures may be effective:

1. **Enhancement of connections between adjacent or intersecting precast wall panels**. Mechanical connectors such as steel shapes and various types of drilled-in anchors, or cast-in-place strengthening methods, or a combination of the two, may be effective in strengthening connections between precast panels. Cast-in-place strengthening methods may include exposing the reinforcing steel at the edges of adjacent panels, adding vertical and transverse (tie) reinforcement, and placing new concrete.
2. **Enhancement of connections between precast wall panels and foundations.** Increasing the shear capacity of the wall panel-to-foundation connection by using supplemental mechanical connectors or by using a cast-in-place overlay with new dowels into the foundation may be an effective retrofit measure. Increasing the overturning moment capacity of the panel-to-foundation connection by using drilled-in dowels within a new cast-in-place connection at the edges of the panel may also be an effective retrofit measure. Adding connections to adjacent panels may also be an effective retrofit measure in eliminating some of the forces transmitted through the panel-to-foundation connection.
3. **Enhancement of connections between precast wall panels and floor or roof diaphragms**. Strengthening these connections by using either supplemental mechanical devices or cast-in-place connectors may be an effective retrofit measure. Both in-plane shear and out-of-plane forces should be considered where strengthening these connections.

10.9 CONCRETE BRACED FRAMES

10.9.1 Types of Concrete Braced Frames Reinforced concrete-braced frames shall be defined as those frames with monolithic, nonprestressed, reinforced concrete beams, columns, and diagonal braces that are coincident at beam–column joints and that resist seismic forces primarily through truss action.

Where masonry infills are present in concrete-braced frames, requirements for masonry infilled frames as specified in Section 10.6 shall also apply.

10.9.2 General The analytical model for a reinforced concrete-braced frame shall represent the strength, stiffness, and deformation capacity of beams, columns, braces, and all connections and components of the element. Potential failure in tension, compression (including instability), flexure, shear, anchorage, and reinforcement development at any section along the component length shall be considered. Interaction with other structural and nonstructural components shall be included.

The analytical model that represents the framing, using line elements with properties concentrated at component centerlines, shall be permitted. The analytical model also shall comply with the requirements specified in Section 10.4.2.1.

In frames that have braces in some bays and no braces in other bays, the restraint of the brace shall be represented in the analytical model as specified above, and the nonbraced bays shall be modeled as frames in compliance with the applicable provisions in other sections of this chapter. Where braces create a vertically discontinuous frame, the effects of the discontinuity on overall building performance shall be considered.

Inelastic deformations in primary components shall be restricted to flexure and axial load in beams, columns, and braces. Other inelastic deformations shall be permitted in secondary components.

10.9.3 Stiffness of Concrete Braced Frames

10.9.3.1 Linear Static and Dynamic Procedures Modeling of beams, columns, and braces in braced portions of the frame considering only axial tension and compression flexibilities shall be permitted. Nonbraced portions of frames shall be modeled according to procedures described elsewhere for frames. Effective stiffnesses shall be according to Section 10.3.1.2.

10.9.3.2 Nonlinear Static Procedure Nonlinear load-deformation relations shall comply with the requirements of Section 10.3.1.2.

Beams, columns, and braces in braced portions shall be modeled using nonlinear truss components or other models whose behavior has been demonstrated to adequately represent behavior of concrete components dominated by axial tension and compression loading. Models for beams and columns in nonbraced portions shall comply with requirements for frames specified in Section 10.4.2.2.2. The model shall be capable of representing inelastic response along the component lengths, as well as within connections.

Monotonic load-deformation relations shall be according to the generalized load-deformation relation shown in Fig. 10-1, except that different relations are permitted where verified by experiments. The overall load-deformation relation shall be established so that the maximum resistance is consistent with the design strength specifications of Sections 10.3.2 and 10.4.2.3. Numerical quantities in Fig. 10-1 shall be derived from tests, rational analyses, or criteria of Section 10.6.2.2.2, with braces modeled as columns in accordance with Table 10-17.

10.9.3.3 Nonlinear Dynamic Procedure Nonlinear load-deformation relations for use in analysis by NDP shall model the

complete hysteretic behavior of each component using properties verified by experimental evidence. Unloading and reloading properties shall represent stiffness and strength degradation characteristics.

10.9.4 Strength of Concrete Braced Frames Component strengths shall be computed according to the general requirements of Sections 10.3.2 and the additional requirements of Section 10.4.2.3. The possibility of instability of braces in compression shall be considered.

10.9.5 Acceptance Criteria for Concrete Braced Frames

10.9.5.1 Linear Static and Dynamic Procedure All actions shall be classified as being either deformation controlled or force controlled, as defined in Section 7.5.1. In primary components, deformation-controlled actions shall be restricted to flexure and axial actions in beams and columns and also axial actions in braces. In secondary components, deformation-controlled actions shall be restricted to those actions identified for the braced or isolated frame in this chapter.

Calculated component actions shall satisfy the requirements of Section 7.5.2.2. The *m*-factors for concrete frames shall be as specified in other applicable sections of this chapter, and *m*-factors for beams, columns, and braces modeled as tension and compression components shall be as specified for columns in Table 10-18. The *m*-factors shall be reduced to half the values in that table but need not be less than 1.0 where component buckling is a consideration. Alternate approaches or values shall be permitted where justified by experimental evidence and analysis.

10.9.5.2 Nonlinear Static and Dynamic Procedures Calculated component actions shall satisfy the requirements of Section 7.5.2.2 and shall not exceed the numerical values listed in Table 10-17 or the relevant tables for isolated frames specified in other sections of this chapter. Where inelastic action is indicated for a component or action not listed in these tables, the performance shall be deemed unacceptable. Alternate approaches or values shall be permitted where justified by experimental evidence and analysis.

10.9.6 Retrofit Measures for Concrete Braced Frames Seismic retrofit measures for concrete braced frame components shall meet the requirements of Section 10.3.7 and other provisions of this standard.

C10.9.6 Retrofit Measures for Concrete Braced Frames Retrofit measures that may be effective in retrofitted concrete braced frames include the general approaches listed for other concrete elements in this chapter, plus other approaches based on rational principles.

10.10 CAST-IN-PLACE CONCRETE DIAPHRAGMS

10.10.1 Components of Cast-in-Place Concrete Diaphragms Cast-in-place concrete diaphragms transmit inertial forces within a structure to vertical seismic-force-resisting elements.

Concrete diaphragm systems shall be made up of slabs, struts, collectors, and chords. Alternatively, diaphragm action may be provided by a structural truss in the horizontal plane. Diaphragms consisting of structural concrete topping on metal deck shall comply with the requirements of Section 9.8.2.

10.10.1.1 Slabs Slabs shall consist of cast-in-place concrete systems that, in addition to supporting gravity loads, transmit inertial loads developed within the structure from one vertical seismic-force-resisting element to another and provide out-of-plane bracing to other portions of the building.

10.10.1.2 Struts and Collectors Collectors are components that serve to transmit the inertial forces within the diaphragm to elements of the seismic-force-resisting system. Struts are components of a structural diaphragm used to provide continuity around an opening in the diaphragm. Struts and collectors shall be monolithic with the slab, occurring either within the slab thickness or being thicker than the slab.

10.10.1.3 Diaphragm Chords Diaphragm chords are components along diaphragm edges with concentrated longitudinal and, in some cases, added transverse reinforcement, acting primarily to resist tension and compression forces generated by bending in the diaphragm. Exterior walls shall be permitted to serve as chords, provided that there is adequate strength to transfer shear between the slab and the wall.

C10.10.1.3 Diaphragm Chords When evaluating an existing building, special care should be taken to evaluate the condition of the lap splices. Where the splices are not confined by closely spaced transverse reinforcement, splice failure is possible if stress levels reach critical values. In retrofit construction, new laps should be confined by closely spaced transverse reinforcement.

10.10.2 Analysis, Modeling, and Acceptance Criteria for Cast-in-Place Concrete Diaphragms

10.10.2.1 General The analytical model for a diaphragm shall represent the strength, stiffness, and deformation capacity of each component and the diaphragm as a whole. Potential failure in flexure, shear, buckling, and reinforcement development shall be considered.

Modeling of the diaphragm as a continuous or simple span horizontal beam supported by elements of varying stiffness shall be permitted. The beam shall be modeled as rigid, stiff, or flexible considering the deformation characteristics of the actual system.

C10.10.2.1 General Some computer models assume a rigid diaphragm. Few cast-in-place diaphragms would be considered flexible; however, a thin concrete slab on a metal deck might be stiff, depending on the length-to-width ratio of the diaphragm.

10.10.2.2 Stiffness of Cast-in-Place Concrete Diaphragms Diaphragm stiffness shall be modeled according to Section 10.10.2.1 and shall be determined using a linear elastic model and gross section properties. The modulus of elasticity used shall be that of the concrete as specified in ACI 318. Where the length-to-width ratio of the diaphragm exceeds 2.0 (where the length is the distance between vertical elements), the effects of diaphragm flexibility shall be considered where assigning lateral forces to the resisting vertical elements.

C10.10.2.2 Stiffness of Cast-in-Place Concrete Diaphragms The concern is for relatively flexible vertical members that may be displaced by the diaphragm and for relatively stiff vertical members that may be overloaded by the same diaphragm displacement.

10.10.2.3 Strength of Cast-in-Place Concrete Diaphragms Strength of cast-in-place concrete diaphragm components shall comply with the requirements of Sections 10.3.2 as modified in this section.

The maximum component strength shall be determined considering potential failure in flexure, axial load, shear, torsion, development, and other actions at all points in the component under the actions of design gravity and lateral load combinations. The shear strength shall be as specified in Chapter 21 of

ACI 318. Strut, collector, and chord strengths shall be as determined for frame components in Section 10.4.2.3.

10.10.2.4 Acceptance Criteria for Cast-in-Place Concrete Diaphragms Diaphragm shear and flexure shall be considered deformation controlled. Acceptance criteria for slab component actions shall be as specified for shear walls in Section 10.7.2.4, with *m-factors* taken according to similar components in Tables 10-21 and 10-22 for use in Eq. (7-36). Acceptance criteria for struts, chords, and collectors shall be as specified for frame components in Section 10.4.2.4. Connections shall be considered force controlled.

10.10.3 Retrofit Measures for Cast-in-Place Concrete Diaphragms Seismic retrofit measures for cast-in-place concrete diaphragms shall meet the requirements of Section 10.3.7 and other provisions of this standard.

C10.10.3 Retrofit Measures for Cast-in-Place Concrete Diaphragms Two general alternatives that may be effective in retrofitting cast-in-place concrete diaphragms include the following: either improve the strength and ductility or reduce the demand in accordance with FEMA 172 (1992a). Providing additional reinforcement and encasement may be an effective measure to strengthen or improve individual components. Increasing the diaphragm thickness may also be effective, but the added weight may overload the footings and increase the seismic loads. Lowering seismic demand by providing additional seismic-force-resisting elements, introducing additional damping, or base isolating the structure may also be effective retrofit measures.

10.11 PRECAST CONCRETE DIAPHRAGMS

10.11.1 Components of Precast Concrete Diaphragms Precast concrete diaphragms are elements made up of primarily precast components with or without topping that transmit shear forces from within a structure to vertical seismic-force-resisting elements.

Precast concrete diaphragms shall be classified as topped or untopped. A topped diaphragm shall be defined as one that includes a reinforced structural concrete topping slab poured over the completed precast horizontal system. An untopped diaphragm shall be defined as one constructed of precast components without a structural cast-in-place topping.

C10.11.1 Components of Precast Concrete Diaphragms Section 10.10 provided a general overview of concrete diaphragms. Components of precast concrete diaphragms are similar in nature and function to those of cast-in-place diaphragms with a few critical differences. One difference is that precast diaphragms do not possess the inherent unity of cast-in-place monolithic construction. Additionally, precast components may be highly stressed because of prestressed forces. These forces cause long-term shrinkage and creep, which shorten the component over time. This shortening tends to fracture connections that restrain the component.

Most floor systems have a topping system, but some hollow-core floor systems do not. The topping slab generally bonds to the top of the precast components, but it may have an inadequate thickness at the center of the span or may be inadequately reinforced to effectively resist seismic forces. Also, extensive cracking of joints may be present along the panel joints. Shear transfer at the edges of precast concrete diaphragms is especially critical.

Some precast roof systems are constructed as untopped systems. Untopped precast concrete diaphragms have been limited to areas of lower seismic hazard by recent versions of ASCE 7. This limitation has been imposed because of the brittleness of connections and lack of test data concerning the various precast systems. Special consideration shall be given to diaphragm chords in precast construction.

10.11.2 Analysis, Modeling, and Acceptance Criteria for Precast Concrete Diaphragms Analysis and modeling of precast concrete diaphragms shall conform to Section 10.10.2.2, with the added requirement that the analysis and modeling shall account for the segmental nature of the individual components.

Component strengths shall be determined in accordance with Section 10.10.2.3. Welded connection strength shall be based on rational procedures, and connections shall be assumed to have little ductility capacity unless test data verify higher ductility values. Precast concrete diaphragms with reinforced concrete topping slabs shall be considered deformation controlled in shear and flexure. *m*-factors shall be taken as 1.0, 1.25, and 1.5 for IO, LS, and CP Performance Levels, respectively.

Untopped precast concrete diaphragms shall be considered force controlled.

C10.11.2 Analysis, Modeling, and Acceptance Criteria for Precast Concrete Diaphragms Welded connection strength can be determined using the latest version of the *Precast Concrete Institute (PCI) Design Handbook* (2010). A discussion of design provisions for untopped precast diaphragms can be found in the appendix to Chapter 9 of FEMA 368 (2001).

The appendix to Chapter 9 of FEMA 450 (2004) provides discussion of the behavior of untopped precast diaphragms and outlines a design approach that may be used for such diaphragms to satisfy the requirements of this standard.

10.11.3 Retrofit Measures for Precast Concrete Diaphragms Seismic retrofit measures for precast concrete diaphragms shall meet the requirements of Section 10.3.7 and other provisions of this standard.

C10.11.3 Retrofit Measures for Precast Concrete Diaphragms Section 10.10.3 provides guidance for retrofit measures for concrete diaphragms in general. Special care should be taken to overcome the segmental nature of precast concrete diaphragms and to avoid damaging prestressing strands when adding connections.

10.12 CONCRETE FOUNDATIONS

10.12.1 Types of Concrete Foundations Foundations shall be defined as those components that serve to transmit loads from the vertical structural subsystems, such as columns and walls, of a building to the supporting soil or rock. Concrete foundations for buildings shall be classified as either shallow or deep foundations as defined in Chapter 8. Requirements of Section 10.12 shall apply to shallow foundations that include spread or isolated footing, strip or line footing, combination footing, and concrete mat footing and to deep foundations that include pile foundations and cast-in-place piers. Concrete grade beams shall be permitted in both shallow and deep foundation systems and shall comply with the requirements of Section 10.12.

10.12.1.1 Shallow Concrete Foundations Existing spread footings, strip footings, and combination footings are reinforced or unreinforced. Vertical loads are transmitted by these footings to the soil by direct bearing; seismic forces are transmitted by a combination of friction between the bottom of the footing and the soil, and passive pressure of the soil on the vertical face of the footing.

Concrete mat footings are reinforced to resist the flexural and shear stresses resulting from the superimposed concentrated and line structural loads and the distributed resisting soil pressure under the footing. Seismic forces are resisted by friction between the soil and the bottom of the footing and by passive pressure developed against foundation walls that are part of the system.

10.12.1.2 Deep Concrete Foundations

10.12.1.2.1 Driven Concrete Pile Foundations Concrete pile foundations shall be composed of a reinforced concrete pile cap supported on driven piles. The piles shall be concrete (with or without prestressing), steel shapes, steel pipes, or composite (concrete in a driven steel shell). Vertical loads are transmitted to the piles by the pile cap. Pile foundation resistance to vertical loads shall be calculated based on the direct bearing of the pile tip in the soil, the skin friction or cohesion of the soil on the surface area of the pile, or based on a combination of these mechanisms. Seismic-force resistance shall be calculated based on passive pressure of the soil on the vertical face of the pile cap, in combination with interaction of the piles in bending and passive soil pressure on the pile surface.

C10.12.1.2.1 Driven Concrete Pile Foundations In poor soils, or soils subject to liquefaction, bending of the piles may be the only dependable resistance to seismic forces.

10.12.1.2.2 Cast-in-Place Concrete Pile Foundations Cast-in-place concrete pile foundations shall consist of reinforced concrete placed in a drilled or excavated shaft. Cast-in-place pile foundation resistance to vertical and seismic forces shall be calculated in the same manner as that of driven pile foundations specified in Section 10.12.1.2.1.

C10.12.1.2.2 Cast-in-Place Concrete Pile Foundations Segmented steel cylindrical liners are available to form the shaft in weak soils and allow the liner to be removed as the concrete is placed. Various slurry mixes are often used to protect the drilled shaft from caving soils. The slurry is then displaced as the concrete is placed by the tremie method.

10.12.2 Analysis of Existing Concrete Foundations For concrete buildings, components shall be considered fixed against rotation at the top of the foundation if the connections between components and foundations, the foundations, and supporting soil are shown to be capable of resisting the induced moments. Where components are not designed to resist flexural moments, or the connections between components and foundations are not capable of resisting the induced moments, they shall be modeled with pinned ends. In such cases, the column base shall be evaluated for the resulting axial and shear forces as well as the ability to accommodate the necessary end rotation of the columns. The effects of base fixity of columns shall be taken into account at the point of maximum displacement of the superstructure.

If a more rigorous analysis procedure is used, appropriate vertical, lateral, and rotational soil springs shall be incorporated in the analytical model as described in Section 8.4. The spring characteristics shall be as specified in Chapter 8. Rigorous analysis of structures with deep foundations in soft soils shall be based on special soil–pile interaction studies to determine the probable location of the point of fixity in the foundation and the resulting distribution of forces and displacements in the superstructure. In these analyses, the appropriate representation of the connection of the pile to the pile cap shall be included in the model. Piles with less than 6 in. of embedment without any dowels into the pile cap shall be modeled as being "pinned" to the cap. Unless the pile and pile cap connection detail is identified as otherwise from the available construction documents, the "pinned" connection shall be used in the analytical model.

Where the foundations are included in the analytical model, the responses of the foundation components shall be considered. The reactions of structural components attached at the foundation (axial loads, shears, and moments) shall be used to evaluate the individual components of the foundation system.

C10.12.2 Analysis of Existing Concrete Foundations Overturning moments and economics may dictate the use of more rigorous analysis procedures.

10.12.3 Evaluation of Existing Condition Allowable soil capacities (subgrade modulus, bearing pressure, and passive pressure) and foundation displacements for the selected performance level shall be as prescribed in Chapter 8 or as established with project-specific data. All components of existing foundation systems and all new material, components, or components required for retrofit shall be evaluated as force-controlled actions. However, the capacity of the foundation components need not exceed 1.25 times the capacity of the supported vertical structural component or element (column or wall).

10.12.4 Retrofit Measures for Concrete Foundations Seismic retrofit measures for concrete foundations shall meet the requirements of Section 10.3.7 and other provisions of this standard.

C10.12.4 Retrofit Measures for Concrete Foundations The measures described in this section may be effective in retrofitting existing shallow and deep foundations.

C10.12.4.1 Retrofit Measures for Shallow Concrete Foundations

1. **Enlarging the existing footing by lateral additions**. Enlarging the existing footing may be an effective retrofit measure. The enlarged footing may be considered to resist subsequent actions produced by the design loads, provided that adequate shear and moment transfer capacity are provided across the joint between the existing footing and the additions.
2. **Underpinning the footing**. Underpinning an existing footing involves the removal of unsuitable soil underneath, coupled with replacement using concrete, soil cement, suitable soil, or other material. Underpinning should be staged in small increments to prevent endangering the stability of the structure. This technique may be used to enlarge an existing footing or to extend it to a more competent soil stratum.
3. **Providing tension tie-downs**. Tension ties (soil and rock anchors, prestressed and unstressed) may be drilled and grouted into competent soils and anchored in the existing footing to resist uplift. Increased soil-bearing pressures produced by the ties should be checked against the acceptance criteria for the selected performance level specified in Chapter 8. Piles or drilled piers may also be effective in providing tension tie-downs of existing footings.
4. **Increasing effective depth of footing**. This method involves pouring new concrete to increase shear and moment capacity of the existing footing. The new concrete must be adequately doweled or otherwise connected so that it is integral with the existing footing. New horizontal reinforcement should be provided, if required, to resist increased moments.
5. **Increasing the effective depth of a concrete mat foundation with a reinforced concrete overlay**. This method involves pouring an integral topping slab over the existing mat to increase shear and moment capacity.

6. **Providing pile supports for concrete footings or mat foundations**. Adding new piles may be effective in providing support for existing concrete footing or mat foundations, provided that the pile locations and spacing are designed to avoid overstressing the existing foundations.
7. **Changing the building structure to reduce the demand on the existing elements**. This method involves removing mass or height of the building or adding other materials or components (such as energy dissipation devices) to reduce the load transfer at the base level. New shear walls or braces may be provided to reduce the demand on existing foundations.
8. **Adding new grade beams**. This approach involves the addition of grade beams to tie existing footings together where poor soil exists, to provide fixity to column bases, and to distribute seismic forces between individual footings, pile caps, or foundation walls.
9. **Improving existing soil**. This approach involves grouting techniques to improve existing soil.

C10.12.4.2 Retrofit Measures for Deep Foundations

1. **Providing additional piles or piers**. Providing additional piles or piers may be effective, provided that extension and additional reinforcement of existing pile caps comply with the requirements for extending existing footings in Section C10.12.4.1.
2. **Increasing the effective depth of the pile cap**. New concrete and reinforcement to the top of the pile cap may be effective in increasing its shear and moment capacity, provided that the interface is designed to transfer actions between the existing and new materials.
3. **Improving soil adjacent to the existing pile cap**. Soil improvement adjacent to existing pile caps may be effective if undertaken in accordance with guidance provided in Section 8.3.
4. **Increasing passive pressure bearing area of pile cap**. Addition of new reinforced concrete extensions to the existing pile cap may be effective in increasing the vertical foundation bearing area and load resistance.
5. **Changing the building system to reduce the demands on the existing elements**. New lateral-load-resisting elements may be effective in reducing demand.
6. **Adding batter piles or piers**. Adding batter piles or piers to existing pile or pier foundations may be effective in resisting seismic forces. It should be noted that batter piles have performed poorly in recent earthquakes where liquefiable soils were present. This problem is especially important to consider around wharf structures and in areas that have a high water table. Addition of batter piles to foundations in areas of such seismic hazards should be in accordance with requirements in Section 8.4.
7. **Increasing tension tie capacity from pile or pier to superstructure**. Added reinforcement should satisfy the requirements of Section 10.3.

This page intentionally left blank

CHAPTER 11
MASONRY

11.1 SCOPE

This chapter sets forth requirements for the seismic evaluation and retrofit of masonry components of the seismic-force-resisting system of an existing building. The requirements of this chapter shall apply to existing masonry components of a building system, retrofitted masonry components of a building system, and new masonry components that are added to an existing building system.

Section 11.2 specifies data collection procedures for performing condition assessments and obtaining material properties. Section 11.3 provides general analysis and design requirements for masonry components. Section 11.4 provides modeling procedures, component strengths, acceptance criteria, and retrofit measures for masonry infills. Section 11.5 specifies requirements for anchorage to masonry walls. Section 11.6 specifies requirements for masonry foundation elements.

Nonstructural components of masonry buildings, including but not limited to parapets, veneer, and masonry partitions that are isolated from the seismic-force-resisting system are addressed in Chapter 13.

C11.1 SCOPE

The provisions of this chapter should be applied to solid or hollow clay-unit masonry, solid or hollow concrete-unit masonry, and hollow clay tile. The provisions of the chapter are applicable to reinforced masonry. For the purposes of this standard, reinforced masonry is defined in Chapter 1 and may differ from the requirements for reinforced masonry in TMS 402. Any discrepancies are caused by the intent of TMS 402 to apply to new construction, not existing structures. Stone or glass block masonry is not covered in this chapter, although the principles herein may provide guidance for stone or glass block masonry buildings in conjunction with project-specific component testing programs.

Techniques for repair of earthquake-damaged masonry components are not included in this standard. The design professional is referred to FEMA 306 (1998b), FEMA 307 (1998c), and FEMA 308 (1998d) for information on evaluation and repair of masonry wall components.

An alternate procedure for the evaluation and retrofit of unreinforced masonry (URM) bearing wall buildings with flexible diaphragms is contained in Section 15.2. The Performance Objective and limitations for that procedure are specified in Section 15.2.1.

Evaluations and retrofits of URM bearing wall buildings and steel or concrete frame buildings with URM infill walls may result in margins against collapse that are difficult to quantify and at times small for the following reasons:

1. Buildings with unreinforced masonry walls are inherently brittle systems that can exhibit limited ductility capacity in certain configurations and modes of behavior.
2. They rely on friction, overburden from supported loads and wall weights, and often highly variable material properties.
3. Their strengths and stiffnesses degrade with each additional cycle of response to motions, and thus they are vulnerable to incremental damage, particularly in larger magnitude, longer duration earthquakes and multiple aftershocks compared with damage from shorter duration, isolated, and moderate earthquakes.
4. Nonlinear modeling of URM walls is feasible, but experience to date suggests that analytical results do not always provide reliable estimates of performance because of variability in actual material strength and condition.

Owners, design professionals, and authorities having jurisdiction over the safety of buildings with URM walls are forewarned to take these factors into consideration when managing their seismic risks.

As indicated in Chapter 1, great care should be exercised in selecting the appropriate retrofit approaches and techniques for application to historic buildings to preserve their unique characteristics.

11.2 CONDITION ASSESSMENT AND MATERIAL PROPERTIES

11.2.1 General The procedures for defining masonry structural systems and assessing masonry condition shall be in accordance with the provisions stated in Section 11.2.2.

Mechanical properties for masonry materials and components shall be based on available drawings, specifications, and other documents for the existing construction in accordance with requirements of Section 6.2. Where such documents fail to provide adequate information to quantify masonry material properties or the condition of masonry components of the structure, such information shall be supplemented by materials tests and assessments of existing conditions as required in Section 6.2 and this section.

A condition assessment shall be conducted in accordance with Section 11.2.2. Material properties of existing masonry components shall be determined in accordance with Section 11.2.3. The extent of materials testing and condition assessment performed shall be used to determine the knowledge factor, as specified in Section 11.2.4.

Use of default material properties shall be permitted in accordance with Section 11.2.3.10.

Use of material properties based on historical information as default values shall be as specified in Section 11.2.3.10. Other values of material properties shall be permitted if rationally justified, based on available historical information for a particular type of masonry construction, prevailing codes, and assessment of existing conditions.

C11.2.1 General Construction of existing masonry buildings in the United States dates back to the 1500s in the southeastern and southwestern regions, to the 1770s in the central and eastern regions, and to the 1850s in the western half of the nation. The stock of existing masonry buildings in the United States is composed largely of structures constructed since 1800. Because the types of units, mortars, and construction methods changed during this time, knowing the age of a masonry building may be useful to identify the characteristics of its construction. Although structural properties cannot be inferred solely from age, some background on typical materials and methods for a given era can help to improve engineering judgment and provide some direction in the assessment of an existing building. The design professional should be aware that values given in some existing documents are working stress values rather than the expected or lower-bound strengths used in this standard.

11.2.2 Condition Assessment A condition assessment of the existing building and site conditions shall be performed as specified in Sections 11.2.2.1 through 11.2.2.3.

A condition assessment shall include the following:

1. The physical condition of primary and secondary components shall be examined, and the presence of any degradation shall be noted. The condition of existing masonry shall be evaluated for unit surface or mortar joint deterioration due to weathering caused by freeze–thaw cycles or frequent moisture saturation.
2. The presence and configuration of components and their connections and the continuity of load paths among components, elements, and systems shall be verified or established.
3. Other conditions, including the presence and attachment of veneer, neighboring party walls and buildings, presence of nonstructural components, prior remodeling, and limitations for retrofit that may influence building performance, shall be identified and documented.

The condition of existing masonry shall be classified as good, fair, or poor defined as follows based on visual examination and other approved procedures that consider the nature and extent of damage or deterioration present.

Good condition: Masonry found during condition assessment to have mortar and units intact with no visible cracking, deterioration, or damage.

Fair condition: Masonry found during condition assessment to have mortar and units intact but with minor cracking.

Poor condition: Masonry found during condition assessment to have degraded mortar, degraded masonry units, or significant cracking.

C11.2.2 Condition Assessment Buildings are often constructed with masonry veneer as an architectural finish, which may make the wall appear thicker than the actual structural thickness. In many areas of the country, the veneer wythe (in many parts of the world, the term "leaf" is used for wythe) is separated from the structural wall by an air space to provide ventilation and moisture control. This method is called cavity wall construction. In this case, the veneer may be anchored but does not add any strength to the assembly.

In areas of the southwest United States and along the California coast (as well as other regions), the veneer is placed directly against the building wall. It will be in a running bond pattern without a header course. Other patterns are also seen. If the veneer is not anchored or has a layer of building paper between it and the inner wythe, it cannot be considered as part of the structural wall.

Veneer on modern buildings may be adhered or anchored. In either case, the veneer is a weight to be considered but does not contribute to a wall's strength. In all cases, the veneer must be anchored to prevent it from detaching during an earthquake. Requirements for veneer are specified in Chapter 13.

Outer wythes that are bonded to the inner wythes with a regular pattern of header courses is not veneer. In this case, the outer wythes are part of the structural wall and can be used in evaluating the height-to-thickness ratio of the wall.

Clay units can be graded by ASTM standards as SW (severe weathering), MW (medium weathering), and NW (no weathering, used for interior masonry walls). SW grade would be specified when in regions that have freeze–thaw exposure.

The design professional is referred to FEMA 306 (1998b), FEMA 307 (1998c), and FEMA 308 (1998d) for additional information regarding the condition of masonry. The classification of the condition of masonry requires consideration of the type of component, the anticipated mode of inelastic behavior, and the nature and extent of damage or deterioration. These documents also contain extensive information regarding the effects of damage on strength, stiffness, and displacement limits for masonry components. Included are damage classification guides with visual representations of typical earthquake-related damage of masonry components, which may be useful in classifying the condition of masonry for this standard. The severity of damage described in FEMA 306 (1998b), FEMA 307 (1998c), and FEMA 308 (1998d) is categorized as insignificant, slight, moderate, heavy, and extreme. Masonry in good condition has severity of damage not exceeding insignificant or slight, as defined by FEMA 306 (1998b). Masonry in fair condition has severity of damage not exceeding moderate. Masonry with heavy or extreme damage is classified as poor.

11.2.2.1 Visual Condition Assessment The size and location of all masonry shear and bearing walls shall be determined by visual examination. The orientation and placement of the walls shall be noted. Overall dimensions of masonry components shall be measured or determined from plans, including wall heights, lengths, and thicknesses. Locations and sizes of window and door openings shall be measured or determined from plans. The distribution of gravity loads to bearing walls shall be estimated where required for the determination of masonry material properties.

Walls shall be classified as reinforced or unreinforced; composite or noncomposite; and grouted, partially grouted, or ungrouted. For reinforced masonry (RM) construction, the size and spacing of horizontal and vertical reinforcement shall be estimated. For multi-wythe construction, the number of wythes shall be noted, as well as the distance between wythes and the placement of inter-wythe ties. The condition and attachment of veneer wythes shall be noted. For grouted construction, the quality of grout placement shall be assessed. For partially grouted walls, the locations of grout placement shall be identified.

The type and condition of the mortar and mortar joints shall be determined. Mortar shall be examined for weathering, erosion, and hardness and to identify the condition of any pointing or repointing, including cracks, internal voids, weak components,

and/or deteriorated or eroded mortar. Horizontal cracks in bed joints, vertical cracks in head joints and masonry units, and diagonal cracks near openings shall be noted.

Vertical components that are not straight shall be identified. Bulging or undulations in walls shall be observed, as well as separation of exterior wythes, out-of-plumb walls, and leaning parapets or chimneys.

Connections between masonry walls and floors or roofs shall be examined to identify details and condition. If construction drawings are available, a minimum of three connections shall be inspected for each connection type. If no deviations from the drawings are found, the sample shall be considered representative. If drawings are unavailable, or if deviations are noted between the drawings and constructed work, then a random sample of connections shall be inspected until a representative pattern of connections is identified.

11.2.2.2 Comprehensive Condition Assessment Nondestructive tests shall be permitted to quantify and confirm the uniformity of construction quality and the presence and degree of deterioration for comprehensive data collection, including but not limited to the following:

1. Ultrasonic or mechanical pulse velocity to detect variations in the density and modulus of masonry materials and to detect the presence of cracks and discontinuities;
2. Impact-echo tests to confirm whether reinforced walls are grouted;
3. Radiography to confirm location of reinforcing steel; and
4. Infrared thermography.

The location and number of nondestructive tests shall be determined in accordance with the requirements of Section 11.2.3.9.3.

C11.2.2.2 Comprehensive Condition Assessment The following nondestructive tests may be used to plan the locations of destructive tests of reinforced masonry and to assist in the interpretation of the data produced by this testing.

Ultrasonic Pulse Velocity Measurement of the velocity of ultrasonic pulses through a wall can result in the detection of variations in the density and modulus of masonry materials as well as the presence of cracks and discontinuities. Transmission times for pulses traveling through a wall (direct method) or between two points on the same side of a wall (indirect method) are measured and used to infer wave velocity.

The use of test equipment that has wave frequencies in the range of 50 kHz has been shown to be appropriate for the condition assessment of masonry walls. Use of equipment with higher frequency waves is not recommended because the short wavelength and high attenuation are not consistent with typical dimensions of masonry units. Test locations should be sufficiently close to identify zones with different properties. Contour maps of direct transmission wave velocities can be constructed to assess the overall homogeneity of a wall elevation. For indirect test data, vertical or horizontal distance can be plotted versus travel time to identify changes in wave velocity (slope of the curve). Abrupt changes in slope identify locations of cracks or flaws.

Ultrasonic methods are not applicable for masonry of poor quality or low modulus or for masonry with many flaws and cracks. The method is sensitive to surface condition, the coupling material used between the transducer or receiver and the masonry, and the pressure applied to the transducer.

The use of ultrasonic pulse velocity methods with masonry walls has been researched extensively by Kingsley et al. (1987), Calvi (1988), and Epperson and Abrams (1989), A standard for the use of ultrasonic methods for masonry has been developed in Europe with RILEM Committee TC 127-MS (2001).

Mechanical Pulse Velocity The mechanical pulse velocity test consists of impacting a wall with a hammer blow and measuring the travel time of a sonic wave across a specified gauge distance. An impact hammer is equipped with a load cell or accelerometer to detect the time of impact. A distant accelerometer is fixed to a wall to detect the arrival time of the pulse. Wave velocity is determined by dividing the gauge length by the travel time. The form and duration of the generated wave can be varied by changing the material on the hammer cap.

The generated pulse has a lower frequency and higher energy content than an ultrasonic pulse, resulting in longer travel distances and less sensitivity to small variations in masonry properties and minor cracking. The mechanical pulse method should be used in lieu of the ultrasonic pulse method where overall mean properties of a large portion of masonry are of interest.

The use of mechanical pulse velocity measurements for masonry condition assessments has been confirmed through research by Kingsley et al. (1987) and Epperson and Abrams (1989). Although no standard exists for mechanical pulse velocity tests with masonry, a standard for concrete materials, ASTM C597, does exist.

Impact Echo The impact-echo technique can be useful for nondestructive determination of the location of void areas within grouted reinforced walls, as reported by Sansalone and Carino (1988). Commercial devices are available or systems can be assembled using available electronic components. Because this technique cannot be used to distinguish between a shrinkage crack at the grout–unit interface and a complete void in the grout, drilling of small holes in the bed joint or examination using an optical bore scope should be performed to verify the exact condition.

Radiography A number of commercial radiographic (X-ray) devices exist that can be used to identify the location of reinforcing steel in masonry walls. These devices are also useful for locating bed-joint reinforcing steel, masonry ties and anchors, and conduits and pipes. The better devices can locate a No. 6 bar at depths up to approximately 6 in.; however, the limitations of this technique are such that for a 12-in.-thick concrete masonry wall, a bar located off-center cannot be found where access is limited to only one side of the wall. In most cases, these devices are not able to assist with determining the locations or lengths of reinforcing bar splices in walls and instead are best used to identify the location of single isolated bars. The devices become less useful where the congestion of reinforcing bars increases.

Infrared Thermography Digital imagery in the infrared spectrum can be used to detect the extent of voids in masonry walls and the locations of grouted and ungrouted cells (Dalrymple 2006).

11.2.2.3 Supplemental Tests Supplemental tests shall be permitted to enhance the level of confidence in masonry material properties or the assessment of masonry condition for justifying the use of a higher knowledge factor, as specified in Section 11.2.4.

C11.2.2.3 Supplemental Tests Ancillary tests are recommended, but not required, to enhance the level of confidence in masonry material properties or to assess condition. Possible supplemental tests are described as follows.

Surface Hardness The surface hardness of exterior wythe (leaf) masonry can be evaluated using the Schmidt rebound hammer. Research has shown that the technique is sensitive to differences in masonry strength but cannot by itself be used to determine absolute strength. A Type N hammer (5,000 lb) is recommended for normal-strength masonry, whereas a Type L hammer (1,600 lb) is recommended for lower strength masonry. Impacts at the same test location should be continued until consistent readings are obtained because surface roughness can affect initial readings.

The method is limited to tests of only the surface wythe (leaf). Tuck-pointing may influence readings, and the method is not sensitive to cracks.

Measurement of surface hardness for masonry walls has been studied by Noland et al. (1987).

Vertical Compressive Stress In situ vertical compressive stress resisted by the masonry can be measured using a thin hydraulic flatjack that is inserted into a removed mortar bed joint. Pressure in the flatjack is increased until distortions in the brickwork are reduced to the precut condition. Existing vertical compressive stress is inferred from the jack hydraulic pressure, using correction factors for the shape and stiffness of the flatjack. For more information, refer to ASTM C1196 (2009a) and ASTM C1197 (2009b).

The method is useful for measurement of gravity load distribution, flexural stresses in out-of-plane walls, and stresses in masonry veneer walls that are compressed by a surrounding concrete frame. The test is limited to only the face wythe of masonry.

No fewer than three tests should be done for each section of the building for which it is desired to measure in situ vertical stress. The number and location of tests should be determined based on the building configuration and the likelihood of overstress conditions.

Large-Scale Load Tests Large-scale destructive tests may be undertaken on portions of a masonry component or element to (1) increase the confidence level on overall structural properties, (2) obtain performance data on archaic building materials and construction materials, (3) quantify effects of complex edge and boundary conditions around openings and two-way spanning behavior, and (4) verify or calibrate analytical models. Large-scale load tests do not necessarily have to be run to the ultimate limit state. They may have value for simply demonstrating structural integrity up to some specific performance level.

In situ large-scale tests are expensive and are typically limited to a single or a few samples, and test data must be extrapolated to the remainder of the system, based on a low confidence level. In situ tests may result in considerable local damage that requires substantial reconstruction near the sample location. In situ testing may prove unreasonably costly or impractical in certain situations because of several factors, such as time and space limitations and unavailability of portable testing facilities. On such occasions, it may be feasible to remove and transport masonry samples for laboratory testing. Procedures for removal and transportation of masonry samples are given in Building Science Series 62 (NBS 1977). Standards for laboratory test methods are published by ASTM.

Out-of-plane strength and behavior of masonry walls can be determined with air-bag tests. Behavior of test panels incorporating connections and edge details can be determined from such a test, in addition to flexural and arching properties of a solid or perforated wall. Strength and deformation capacity under in-plane seismic forces can be determined by loading an individual portion of wall that is cut free of the surrounding masonry. Loading actuators are reacted against adjacent and stronger portions of masonry.

Air-bag testing can provide insight regarding the out-of-plane strength of the wall but does not consider the dynamic characteristics of a cracked wall responding to out-of-plane demands. Where adequate wall-to-diaphragm connections are present, the dynamic out-of-plane stability of URM walls is best evaluated using shake-table testing with realistic boundary conditions.

Visual and nondestructive surveys should be used to identify locations for test samples.

Standards for laboratory test methods are published by ASTM.

11.2.2.4 Condition Enhancement Where required within the scope of and consistent with the Performance Objective of the seismic evaluation or retrofit, the condition of existing masonry shall be enhanced in accordance with this section. Masonry units with significant surface deterioration shall be replaced. Mortar joint deterioration shall be patched by pointing or repointing of the eroded joint in accordance with Section 11.2.2.5. Existing cracks in solid unit unreinforced and in solid grouted hollow unit masonry shall be repaired by epoxy pressure injection and/or by fiber sheets bonded by epoxy to the masonry surface.

C11.2.2.4 Condition Enhancement Replacement materials, brick, and mortar should be compatible with the original materials in terms of mechanical properties, as well as porosity and water vapor permeability. Many historic masonry buildings have been severely damaged by using incompatible materials that have very different strength, density, and stiffness than the original materials.

Users are cautioned about injecting epoxies into voids. Bursting of structural material has inadvertently been caused by epoxy having a flash set and substantial expansion when a critical volume is injected.

11.2.2.5 Pointing or Repointing of URM Walls Where required within the scope of and consistent with the Performance Objective of the seismic evaluation or retrofit, the condition of existing masonry joints shall be pointed or repointed in accordance with this section.

C11.2.2.5 Pointing or Repointing of URM Walls For guidance on pointing or repointing, see NPS (1998), BIA (2005), and National Research Council Canada (2008). When pointing or repointing unusually thick joints, the minimum depth for the removal of mortar and placement of new mortar should generally be approximately twice the thickness of the joint.

11.2.2.5.1 Joint Preparation Deteriorated mortar shall be cut out, by means of a toothing chisel or nonimpact power tool, until sound mortar is reached but to a depth of not less than 3/4 in. or twice the thickness of the joint, whichever is less. Care shall be taken not to damage the masonry edges. After cutting is complete, all loose material shall be removed with a brush, air, or water stream.

11.2.2.5.2 Mortar Preparation The mortar mix shall be proportioned as required by the construction specifications. The pointing mortar shall be prehydrated by first thoroughly mixing all ingredients dry and then mixing again, adding only enough water to produce a damp, unworkable mix that retains its form when pressed into a ball. The mortar shall be kept in a damp condition for one and one-half hours; then sufficient water shall be added to bring it to a consistency that is somewhat drier than conventional masonry mortar.

11.2.2.5.3 Packing The joint into which the mortar is to be placed shall be dampened but without freestanding water. The

mortar shall be tightly packed into the joint in layers not exceeding 1/4 in. deep until it is filled; then it shall be tooled to a smooth surface to match the original profile.

11.2.3 Properties of In-Place Materials and Components

11.2.3.1 General The following component and connection material properties shall be obtained for the as-built structure in accordance with Sections 11.2.3.1 through 11.2.3.9:

1. Masonry compressive strength.
2. Elastic modulus for masonry.
3. Unreinforced and reinforced masonry bed-joint flexural tensile strength.
4. Unreinforced masonry shear strength.
5. Where unreinforced masonry material testing is required by Section 6.2, test methods to quantify masonry strength and stiffness properties shall be determined in accordance with Sections 11.2.3.2 through 11.2.3.7. The minimum number of tests shall comply with the requirements of Section 11.2.3.9.
6. Where reinforced masonry material testing is required by Section 6.2, test methods to quantify strength and stiffness properties shall be determined in accordance with Sections 11.2.3.2 through 11.2.3.5, 11.2.3.7, and 11.2.3.8. The minimum number of tests shall comply with the requirements of Section 11.2.3.9.
7. Expected material properties shall be based on mean values from test data unless specified otherwise. Lower-bound material properties shall be based on mean minus one standard deviation values from test data unless specified otherwise.

C11.2.3.1 General The material properties of in-place masonry can be estimated by use of compressive strength of clay or similar solid units and compressive strength (2-in. × 2-in. cube) of mortar. Two-inch cubes are prepared in the laboratory in nonabsorbent forms and thus can understate the compressive strength determined using absorbent forms such as clay brick. For default masonry properties, refer to Section 11.2.3.10.

11.2.3.2 Nominal or Specified Properties Nominal material properties, or properties specified in construction documents, of clay or concrete units shall be taken as lower-bound material properties. Corresponding expected material properties shall be calculated by multiplying lower-bound values by a factor as specified in Table 11-1 to translate from lower-bound to expected values. Refer to Chapter 10 for properties of reinforcing steel.

11.2.3.3 Masonry Compressive Strength Expected masonry compressive strength, f_{me}, shall be determined using one of the following three methods:

1. Test prisms shall be extracted from an existing wall and tested in accordance with Section 1.4.B.3 of TMS 602;
2. Prisms shall be fabricated from actual extracted masonry units, and a surrogate mortar shall be designed on the basis of a chemical analysis of actual mortar samples. The test prisms shall be tested in accordance with Section 1.4.B.3 of TMS 402; or
3. For solid unreinforced masonry, the strength of the masonry can be estimated using a flatjack test in accordance with ASTM C1196.

For each of the three methods enumerated in this section, the expected compressive strength shall be based on the net mortared area.

C11.2.3.3 Masonry Compressive Strength The three test methods are further described in Section C7.2.2.1 of FEMA 274 (1997b). As an alternative to the test methods given in this section of this standard, the expected masonry compressive strength may be deduced from a nominal value prescribed in TMS 402.

11.2.3.4 Masonry Elastic Modulus in Compression Expected values of elastic modulus for masonry in compression, E_{me}, shall be determined in accordance with TMS 402.

11.2.3.5 Masonry Flexural Tensile Strength Expected flexural tensile strength, f_{te}, for out-of-plane bending shall be determined for unreinforced and reinforced masonry using one of the following three methods:

1. Test samples shall be extracted from an existing wall and subjected to minor-axis bending using the bond-wrench method of ASTM C1072;
2. Test samples shall be tested in situ using the bond-wrench method; or
3. Sample wall panels shall be extracted and subjected to minor-axis bending in accordance with ASTM E518.

Flexural tensile strength for URM walls subjected to in-plane seismic forces shall be assumed to be equal to that for out-of-plane bending, unless testing is undertaken to define the expected tensile strength for in-plane bending.

C11.2.3.5 Masonry Flexural Tensile Strength The flexural tensile strength of older brick masonry walls constructed with lime mortars may often be neglected. However, the term "lime mortar" is often not consistently defined and may be misunderstood. Mortar Types S, N, and O use lime in different proportions. The concept that weathering of mortar is attributed to "lime mortar" can be misleading because unwashed sand is also a common reason for weathering of mortar.

The three test methods for out-of-plane bending are further described in Section C7.2.2.3 of FEMA 274 (1997b). For in-plane bending, flexural stress gradients across the section width are much lower than for out-of-plane bending. Thus, data from tests described in this section are conservative and should be used only in lieu of data on in-plane tensile strength.

11.2.3.6 Unreinforced Masonry Shear Strength URM masonry may be tested to determine the expected shear strength by one of the following shear tests in Sections 11.2.3.6.1 or 11.2.3.6.2 for each class of URM determined by Section 11.2.3.9.2. These expected shear strengths may be used in lieu of using Tables 11-1 and 11-2.

Lower-bound shear strengths may be determined by Sections 11.2.3.6.3 or 11.2.3.6.4.

11.2.3.6.1 Determination of Expected URM Shear Strength by Testing for Bed-Joint Shear Strength Individual bed-joint shear strength test values, v_{to}, shall be determined in accordance with Eq. (11-1) when testing is performed in accordance with ASTM:

$$v_{to} = \frac{V_{\text{test}}}{A_b} - P_{D+L} \tag{11-1}$$

Table 11-1. Factors to Translate Lower-Bound Masonry Strengths to Expected Strengths

Strength	Factor
Compressive strength (f_{me})	1.3
Flexural tensile strength	1.3
Shear strength	1.3

where V_{test} = test load at first movement of a masonry unit;
A_b = sum of net mortared area of bed joints located directly above and below the test unit; and
P_{D+L} = gravity compressive stress at the test location considering actual unfactored dead plus live loads in place at the time of testing.

The expected unreinforced masonry bed-joint sliding strength, v_{me}, shall be determined from Eq. (11-2).

$$v_{me} = \frac{0.75\left(0.75v_{te} + \frac{P_D}{A_n}\right)}{1.5} \tag{11-2}$$

where A_n = area of net mortared and/or grouted section of a wall or wall pier;
P_D = superimposed dead load at top of wall or pier under consideration; and
v_{te} = average of the bed-joint shear strength test values, v_{to}, given in Eq. (11-1).

Values for the average bed-joint shear strength test value, v_{te}, shall not exceed 100 lb/in.^{2} for the determination of v_{me} in Eq. (11-2). The 0.75 factor on v_{te} shall not be applied for single-wythe masonry walls. The 0.75 factor on v_{te} shall be permitted to be 1.0 if mortar in the collar joint is not present or is in poor condition.

C11.2.3.6.1 Determination of Expected URM Shear Strength by Testing for Bed-Joint Shear Strength Expected shear strength of URM components can be inferred from in situ measurements of bed-joint shear strength using the in-place shear test detailed in ASTM C1531.

The method is limited to tests of the face wythe. When the test unit is pushed, resistance is provided across not only the bed-joint shear planes but also the collar-joint shear plane. Because seismic shear is not transferred across the collar joint in a multi-wythe (multi-leaf) masonry wall, the estimated shear resistance of the collar joint must be deducted from the test values. This deduction is achieved by multiplying the v_{te} term by 0.75 in Eq. (11-2), which for a typical clay unit is the ratio of the areas of the top and bottom bed joints to the sum of the areas of the bed and collar joints. In cases where the collar joint does not contribute to the shear strength, the 0.75 factor need not be applied.

The effect of friction at the particular location of the masonry element being evaluated is accounted for by increasing the bed-joint shear capacity by the addition of the term "P/A" in Eq. (11-2). The sum is then multiplied by a reduction factor equal to 0.75. The 1.5 factor in Eq. (11-2) reduces the tested shear to average shear on the wall or wall pier. The shear stress, based on tensile splitting, is calculated by $v = VQ/Ib$ where Q is zero at the edge of the cross section and maximum at the center of the element.

11.2.3.6.2 Alternative Procedures for Determining Expected URM Shear Strength by Testing for Tensile Splitting Strength Wythes (leaves) of solid masonry units may be tested by sampling the masonry by drilled cores of not less than 8 in. in diameter. A bed-joint intersection with a head joint shall be in the center of the core. The tensile splitting strength of these cores should be determined by the standard test method of ASTM C496. The core should be placed in the test apparatus with the bed joint oriented at 45 degrees from the horizontal. The tensile splitting strength should be determined by Eq. (11-3):

$$f_{sp} = 2P/\pi A_n \tag{11-3}$$

Hollow-unit masonry constructed of through-the-wall units may be tested by sampling the masonry by a sawn square prism not less than 18 in. square. The tensile splitting strength should be determined by the standard test method of ASTM E519. The diagonal axis of the prism should be placed in a vertical position. The tensile splitting strength should be determined by Eq. (11-4):

$$f_{sp} = 0.494P/A_n \tag{11-4}$$

where A_n = diameter of core multiplied by its length or the area of the side of a square prism.

The expected URM shear strength, v_{me}, shall be determined by Eq. (11-5):

$$v_{me} = \frac{0.75\left(f_{spe} + \frac{P_D}{A_n}\right)}{1.5} \tag{11-5}$$

where f_{spe} = average of the mortar tensile splitting strength values, f_{sp}, given in Eq. (11-3) or (11-4); and
A_n and P_D are defined in Section 11.2.3.6.1.

C11.2.3.6.2 Alternative Procedures for Determining Expected URM Shear Strength by Testing for Tensile Splitting Strength Expected shear strength of URM components can also be inferred from tensile splitting tests as detailed in ASTM C1531, ASTM C496, and ASTM E519.

11.2.3.6.3 Determination of Lower-Bound URM Shear Strength by Testing for Bed-Joint Shear Strength The lower-bound URM bed-joint sliding strength, v_{mL}, shall be determined from Eq. (11-6).

$$v_{mL} = \frac{0.75\left(0.75v_{tL} + \frac{P_D}{A_n}\right)}{1.5} \tag{11-6}$$

where v_{tL} = mean minus one standard deviation of the bed-joint shear strength test values, v_{to}, given in Eq. (11-1); and
A_n and P_D are defined in Section 11.2.3.6.1.

Values for the lower-bound bed-joint shear strength test value, v_{tL}, shall not exceed 100 lb/in.^{2} for the determination of v_{mL} in Eq. (11-6). The 0.75 factor on v_{tL} shall not be applied for single-wythe masonry walls.

11.2.3.6.4 Alternative Procedures for Determining Lower-Bound URM Shear Strength by Testing for Tensile Splitting Strength The lower-bound URM shear strength, v_{mL}, shall be determined by Eq. (11-7):

$$v_{mL} = \frac{0.75\left(f_{spL} + \frac{P_D}{A_n}\right)}{1.5} \tag{11-7}$$

where f_{spL} = mean minus one standard deviation of the mortar tensile splitting strengths, f_{sp}, given in Eq. (11-3) or (11-4); and
A_n and P_D are defined in Section 11.2.3.6.1.

11.2.3.7 Masonry Shear Modulus The expected shear modulus of masonry (unreinforced or reinforced), G_{me}, shall be permitted to be taken from Section 1.8.2.2.1 of TMS 402.

C11.2.3.7 Masonry Shear Modulus Shear stiffness of reinforced masonry should ideally be taken as a fraction of the uncracked shear stiffness value. However, the relationship between the shear modulus and the modulus of elasticity for cracked reinforced masonry has historically been given as $0.4E_m$, although little experimental evidence exists to support this relationship (see Commentary 1.8.2 in TMS 402). Table 10-5 of this standard provides similar guidance for concrete shear walls that are typically assumed to be cracked.

Laboratory tests of URM shear walls (Epperson and Abrams 1989 and Abrams and Shah 1992) have found that the shear modulus of URM does approach the value of 0.4 times the elastic modulus in compression, as given by the theory of elasticity for isotropic, elastic members. This value is limited to elastic uncracked behavior of the URM. After cracking, the shear stiffness is known to reduce substantially as sliding along bed joints develops or as diagonal tension cracks open. Because these nonlinear effects cannot be related to the elastic modulus in compression, the $0.4E_m$ value is only appropriate for uncracked URM. Shear stiffness of postcracked URM can be taken as a fraction of the initial shear stiffness. Test data by Atkinson et al. (1989) provide estimates of shear stiffness based on a frictional mechanism along bed joints.

11.2.3.8 Steel Reinforcement Tensile Strength and Yield Properties The expected yield strength of reinforcing bars, f_{ye}, shall be based on mill test data or on tension tests of actual reinforcing bars taken from the subject building. Tension tests shall be performed in accordance with ASTM A615.

Use of Tables 10-1, 10-3, and 10-4 shall be permitted for determination of yield and tensile strength properties of existing reinforcement.

11.2.3.9 Minimum Number of Tests Materials testing is not required if material properties are available from original construction documents that include material test records or material test reports. Otherwise, minimum numbers of tests shall be performed as specified in Sections 11.2.3.9.1 through 11.2.3.9.3, as applicable.

C11.2.3.9 Minimum Number of Tests The number and location of material tests should be selected to provide sufficient information to adequately define the existing condition of materials in the building. Test locations should be identified in those masonry components that are determined to be critical to the primary path of seismic-force resistance.

11.2.3.9.1 Usual Testing of Reinforced Masonry The minimum number of tests to determine masonry and reinforcing steel material properties for usual data collection shall be based on the following criteria:

1. If the specified design compressive strength of the masonry is known, at least two tests shall be performed on samples of each different masonry compressive strength used in the construction of the building;
2. If the specified design strength of the masonry is not known, at least one test shall be performed on each type of component, with a minimum of six tests performed on the entire building;
3. If the specified design strength of the reinforcing steel is known, use of nominal or specified material properties shall be permitted without additional testing; and
4. If the specified design strength of the reinforcing steel is not known, at least two strength coupons of reinforcing steel shall be removed from a building for testing.

11.2.3.9.2 Usual Testing of Unreinforced Masonry Existing unreinforced masonry shall be categorized into one or more classes based on quality of construction and state of repair, deterioration, and weathering. Classes shall be defined for whole walls, not for small areas within a wall.

Masonry shear tests as described in Section 11.2.3.6 shall be performed at locations representative of the mortar conditions throughout the entire building, taking into account variations in workmanship at different building height levels, variations in weathering of exterior surfaces, and variations in the conditions of the interior surfaces due to deterioration caused by leaks and condensation of water or by the deleterious effects of other substances contained within the building. The exact test locations shall be determined at the building site.

The minimum number of tests per class shall be as follows:

1. At each of both the first and top stories, no fewer than two tests per wall or line of wall elements providing a common line of resistance to seismic forces;
2. At each of all other stories, no fewer than one test per wall or line of wall elements providing a common line of resistance to seismic forces; and
3. In any case, no fewer than one test per 1,500 ft^2 (139.4 m^2) of wall surface and no fewer than a total of eight tests.

11.2.3.9.3 Comprehensive Testing of Reinforced and Unreinforced Masonry The minimum number of tests necessary to quantify properties by in-place testing for comprehensive data collection shall be based on the following criteria:

1. A minimum of three tests shall be performed for each masonry class, and for each three floors of construction or 3,000 ft^2 of wall surface, if original construction records are available that specify material properties; six tests shall be performed if original construction records are not available. At least two tests shall be performed for each wall or line of wall elements providing a common resistance to seismic forces. A minimum of eight tests shall be performed for each building; and
2. Additional tests shall be done to estimate material strengths in regions where properties differ, or nondestructive condition assessment tests in accordance with Section 11.2.2.2 shall be used to quantify variations in material strengths.

Samples for tests shall be taken at locations representative of the material conditions throughout the entire building, taking into account variations in workmanship at different story levels, variations in weathering of the exterior surfaces, and variations in the condition of the interior surfaces due to deterioration caused by leaks and condensation of water and/or the deleterious effects of other substances contained within the building.

An increased sample size shall be permitted to improve the confidence level. The relation between sample size and confidence shall be as defined in ASTM E139.

If the coefficient of variation in test measurements exceeds 25%, the number of tests performed shall be doubled.

If mean values from in situ material tests are less than the default values prescribed in Section 11.2.3.10, the number of tests performed shall be doubled.

11.2.3.10 Default Properties Use of default material properties to determine component strengths shall be permitted with the linear analysis procedures in Chapter 7.

Default lower-bound values for URM compressive strength, flexural tensile strength, and shear strength are permitted to be as shown in Table 11-2(a). Default lower-bound strength for reinforced masonry shall be as shown in Table 11-2(b). Default expected values for masonry compressive strength, flexural tensile strength, and masonry shear strength shall be determined by multiplying lower-bound strengths by an appropriate factor taken from Table 11-1.

Default lower-bound and expected strength yield stress values for reinforcing bars shall be determined in accordance with Section 10.2.2.5.

C11.2.3.10 Default Properties Default properties for masonry based on the tables in current code provisions are applicable to buildings built with materials similar to those specified in current

Table 11-2(a). Default Lower-Bound Unreinforced Masonry Strengths

Material	Solid Units	Hollow Concrete Units
Compressive strength[a]	1,000 lb/in.^{2} × 0.6	1,350 lb/in.^{2} × 0.6
Flexural tensile strength	75 lb/in.^{2} × 0.6	48 lb/in.^{2}[b] (158 lb/in.^{2})[c] × 0.6
Shear strength	[d]	[d]

[a]Clay f'_m is based on 2,100 lb/in.^{2} unit compressive strength and Type N mortar. Hollow concrete f'_m is based on 1,900 lb/in.^{2} unit net compressive strength and Type N mortar on face shells only.
[b]Ungrouted hollow concrete blocks.
[c]Solid grouting of hollow concrete blocks; may be interpolated for partial grouting based on net area.
[d]Strength shall be taken as 80% of shear strength values determined in accordance with Section 3.2.4 of TMS 402.

Table 11-2(b). Default Lower-Bound Reinforced Masonry Strengths

Material	Solid Units	Solid Grouted Hollow Concrete Units
Compressive strength[a]	1,000 lb/in.^{2} × 0.9	1,350 lb/in.^{2} × 0.9
Shear strength	[b]	[b]

[a]Clay f'_m is based on 2,100 lb/in.^{2} flatwise unit compressive strength and Type N mortar. Hollow concrete block f'_m is based on 1,900 lb/in.^{2} unit net compressive strength, Type N mortar, and solid grouting.
[b]Strength shall be taken as the shear strength values determined in accordance with Section 3.3.4.1.2 of TMS 402.

codes. Where materials are different (i.e., type of mortar, unit strength, air entrainment), default properties should be based on Tables 11-2(a) and 11-2(b).

Default values of compressive strength are set at low stresses to reflect an absolute lower bound. Minimum strength for medium weathering (MW) clay units is 2,500 lb/in.^{2} (Drysdale 1999). Mortar prepared by proportion specifications such as M, S, N, and O have average compressive strengths of 2,500, 1,800, 750, and 350 lb/in.^{2}, respectively. Table 1 in TMS 402 allows without testing a compressive strength of 1,000 lb/in.^{2} for clay units having an MW strength of 2,100 lb/in.^{2} and Type N mortar. This value of f'_m is the lower-bound net compressive strength of 1,350 lb/in.^{2} for hollow load-bearing concrete block of 1,900 lb/in.^{2} net unit strength and mortar Type N. Default values for flexural tensile strength are set low even for masonry in good condition because of the dependence of flexural tensile strength on the unit-mortar bonding, which can be highly variable because of the variability of the condition of the mortar. Comparison of default masonry shear values with values that may be obtained from Eq. (11-1) shows that if in-place shear tests are undertaken, a significant increase in strength over default values is possible.

11.2.4 Knowledge Factor A knowledge factor, κ, for computation of masonry component capacities and permissible deformations shall be selected in accordance with Section 6.2.4 and with the following additional requirements specific to masonry components. A knowledge factor, κ, equal to 0.75 shall be used if any of the following criteria are met:

1. Components are found to be damaged or deteriorated during assessment, and further testing is not performed to quantify their condition or justify the use of κ = 1.0;
2. Mechanical properties have a coefficient of variation exceeding 25%; or
3. Components contain archaic or proprietary material and the condition is uncertain.

11.3 MASONRY WALLS

The procedures set forth in this section for determination of stiffness, strength, and deformation of masonry walls shall be applied to building systems made up of any combination of existing URM walls. Unreinforced or reinforced masonry walls enhanced for seismic retrofit or new walls added to an existing building may be used for seismic retrofit.

Actions in a structure shall be classified as being either deformation controlled or force controlled as defined in Section 7.5.1. Design strengths for deformation-controlled and force-controlled actions shall be calculated in accordance with this section.

Strengths used for deformation-controlled actions are denoted Q_{CE} and shall be taken as equal to expected strengths obtained experimentally, calculated using accepted mechanics principles, or based on default values listed in Section 11.2.3.10 and modified by Table 11-1. Expected strength is defined as the mean maximum resistance expected over the range of deformations to which the component is likely to be subjected. Where calculations are used to define expected strength, expected material properties shall be used. Unless otherwise specified in this standard, use of strength design procedures specified in TMS 402 to calculate expected strengths shall be permitted. The strength reduction factor, ϕ, shall be taken equal to 1.0.

Force-controlled actions shall be as defined in Section 7.5.1. Strengths used in design for force-controlled actions are denoted Q_{CL} and shall be taken as equal to lower-bound strengths obtained experimentally, calculated using established mechanics principles, or based on default values listed in Section 11.2.3.10. Lower-bound strength is defined as the mean minus one standard deviation of resistance over the range of deformations and loading cycles to which the component is subjected. Where calculations are used to define lower-bound strengths, lower-bound material properties shall be used. It shall be permitted to calculate lower-bound properties from expected properties using the conversion factors in Table 11-1. Unless otherwise specified in this standard, use of strength design procedures specified in TMS 402 to calculate lower-bound strengths shall be permitted, except that the strength reduction factor, ϕ, shall be taken equal to 1.0. Where alternative definitions of design strength are used, they shall be justified by experimental evidence.

Where design actions are determined using the nonlinear procedures of Chapter 7, component force–deformation response shall be represented by nonlinear force–deformation relations. Force–deformation relations shall be based on experimental evidence or the generalized force–deformation relation shown in Fig. 11-1, with parameters *c, d, e*, and *f* as defined in Tables 11-4 and 11-7 and 11-9. Materials that have brittle behavior as shown in Fig. 11-1(b) should be considered force-controlled actions.

C11.3 MASONRY WALLS

Expected yield strength of reinforcing steel, as specified in this standard, includes consideration of material overstrength and strain-hardening.

Component drift ratios are the ratio of differential displacement, Δ_{eff}, between each end of the component over the effective height, h_{eff}, of the component. Depending on the geometry of the wall or wall pier configuration, the elevations at which these

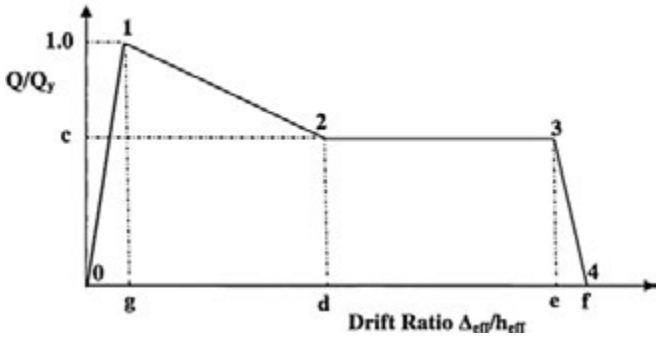

FIG. 11-1(a). Typical Generalized Force–Deformation Relationship for Deformation-Controlled Actions for Reinforced or Unreinforced Masonry

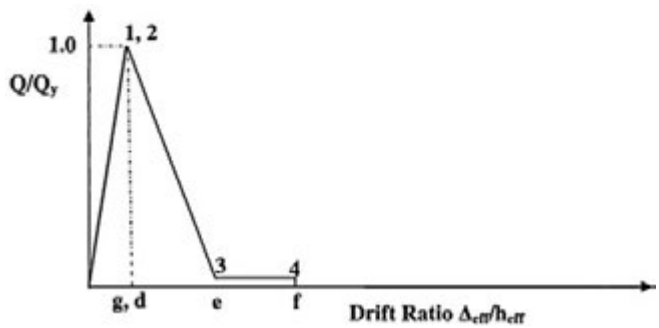

FIG. 11-1(b). Typical Generalized Force–Deformation Relation for Force-Controlled Actions for Reinforced or Unreinforced Masonry

parameters are determined may vary within the same wall element, as shown in Fig. C11-1.

Materials that have brittle behavior as shown in Fig. 11-1(b) should be considered force-controlled actions.

11.3.1 Types of Masonry Walls Masonry walls shall be categorized as unreinforced or reinforced; ungrouted, partially grouted, or fully grouted; and composite or noncomposite. Existing, new, or retrofitted masonry walls shall be capable of resisting forces applied parallel to their plane and normal to their plane, as described in Sections 11.3.2 through 11.3.5.

C11.3.1 Types of Masonry Walls Any of these categories of masonry elements can be used in combination with existing, retrofitted, or new seismic-force-resisting elements of other materials such as steel, concrete, or timber.

11.3.1.1 Existing Masonry Walls Existing masonry walls shall include all structural walls of a building system that are in place before seismic retrofit.

Existing masonry walls shall be assumed to behave in a manner consistent with new masonry walls, provided that the masonry is in fair or good condition as defined in this standard or has existing damage and weathering degradation repaired in accordance with Section 11.2.2.

11.3.1.2 New Masonry Walls New masonry walls shall include all new wall elements added to an existing seismic-force-resisting system. New walls shall be designed in accordance with the requirements set forth in this standard and detailed and constructed in accordance with an approved building code.

C11.3.1.2 New Masonry Walls Guidelines for seismic design of new masonry walls are found in FEMA P-750 (2009c).

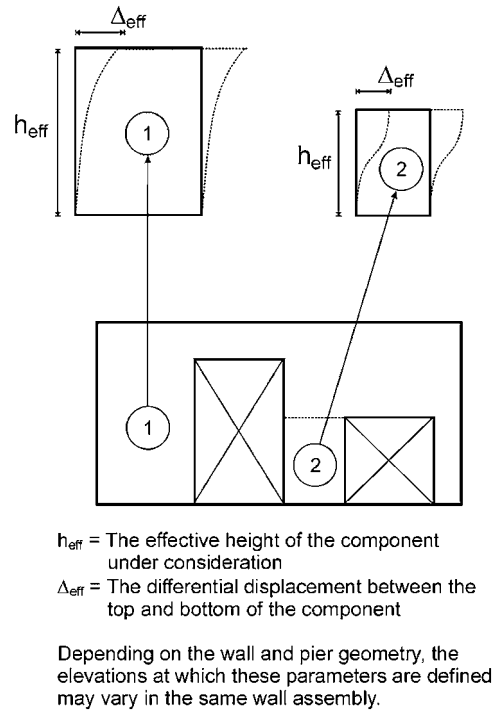

FIG. C11-1. Effective Height and Differential Displacement of Wall Components

11.3.1.3 Retrofitted Masonry Walls Retrofitted masonry walls shall include existing walls that are enhanced by an approved method.

C11.3.1.3 Retrofitted Masonry Walls Methods of retrofitting masonry walls are intended to improve performance of masonry walls subjected to both in-plane and out-of-plane seismic forces and are described as follows.

Infilled Openings in Unreinforced Masonry An infilled opening may be considered to act compositely with the surrounding masonry if the interface of new and old masonry has greater shear strength than the expected shear strength of the old masonry. This interface shear strength shall be verified experimentally.

Stiffness assumptions, strength criteria, and acceptable deformations for masonry walls with infilled openings should be consistent with unretrofitted solid masonry walls; differences in elastic moduli and strengths for the new and old masonry walls should be considered for the composite section.

Enlarged Openings Openings in URM shear walls may be enlarged by removing portions of masonry above or below windows or doors.

Openings are enlarged to increase the height-to-length aspect ratio of wall piers so that the limit state may be altered from force-controlled to deformation-controlled actions. This method is only applicable to URM walls.

Stiffness assumptions, strength criteria, and acceptable deformations for URM walls with enlarged openings shall be reassessed to reflect the final condition of the wall. Load paths for structural elements supporting walls over existing or new openings such as lintels or arches must be addressed in such alterations.

Shotcrete An existing unreinforced masonry wall with an application of shotcrete may be considered as a composite section if the bond between the shotcrete and the masonry is adequate to

force a common strain in the composite materials. Stresses should be determined by relative elastic moduli. The load path to the shotcrete from roof and floor diaphragms should not pass through the unreinforced masonry.

The masonry surface should be prepared to remove any paint or similar coating that reduces bond strength and should be wetted before application of shotcrete to increase bond strength. The shotcrete mix should have low shrinkage and should be wet-cured to minimize shrinkage.

Coatings and Near-Surface Mounted Reinforcement for URM Walls A coated masonry wall may be considered a composite section as long as anchorage is provided at the interface between the coating and the masonry wall to transfer shear forces. Stresses in the masonry and coating should be determined considering the difference in elastic moduli for each material. If stresses exceed expected strengths of the coating material, then the coating should be considered ineffective.

Overlays and near-surface mounted bars of steel- or fiber-reinforced polymers bonded by adhesives can be used to alter the sequence of displacement-controlled and force-controlled actions of existing masonry walls (Moon et al. 2006 and Ismail et al. 2011).

Stiffness assumptions, strength criteria, and acceptable deformations for coated masonry walls should be consistent with existing URM walls.

Reinforced Cores for URM Walls A reinforced-cored masonry wall should be considered to behave as a reinforced masonry (RM) wall, provided that the bond between the new reinforcement and the grout and between the grout and the cored surface are capable of transferring reinforcement strain to the masonry. Vertical reinforcement should be embedded at the base of the wall to resist the full tensile strength of the reinforcement.

Grout in new reinforced cores should consist of cementitious materials whose hardened properties are compatible with those of the surrounding masonry.

Adequate shear strength must exist or should be provided, so that the strength of the new vertical reinforcement can be developed.

Stiffness assumptions, strength criteria, and acceptable deformations for URM walls with reinforced cores should be consistent with RM walls.

Prestressed Cores for URM Walls A prestressed-cored masonry wall with unbonded tendons should be considered to behave as a URM wall with increased vertical compressive stress.

Losses in prestressing force caused by creep and shrinkage of the masonry should be accounted for in analyses conducted in accordance with Chapter 7.

Stiffness assumptions, strength criteria, and acceptable deformations for URM walls with unbonded prestressing tendons should be consistent with existing URM walls subjected to vertical compressive stress.

Grout Injections Grout used for filling voids and cracks should have strength, modulus, and thermal properties compatible with the existing masonry.

Inspections should be conducted in accordance with Section 1.5.10 during the grouting process to ensure that voids are completely filled with grout.

Stiffness assumptions, strength criteria, and acceptable deformations for masonry walls with grout injections should be consistent with existing URM or RM walls.

Repointing Bond strength of new mortar should be equal to or greater than that of the original mortar. Compressive strength of new mortar should be equal to or less than that of the original mortar.

Stiffness assumptions, strength criteria, and acceptable deformations for repointed masonry walls should be consistent with existing masonry walls.

Braced Masonry Walls Masonry walls with height-to-thickness ratios in excess of those permitted by Table 11-5, or out-of-plane bending stresses in excess of those permitted by Section 11.3.5, may be braced with external structural elements. Adequate strength and stiffness should be provided in the bracing element and connections to transfer forces from the masonry wall to the roof or floor diaphragm. The horizontal spacing of the vertical braces should not exceed one-half of the story height. Deflection of the bracing members calculated in accordance with Chapter 13 should not exceed 10% of the wall thickness. Out-of-plane deflections of braced walls resulting from the transfer of vertical floor or roof loadings should be considered.

Stiffness assumptions, strength criteria, and acceptable deformations for braced masonry walls should be consistent with existing masonry walls. The reduced span of the masonry wall should be considered.

Stiffening Elements Masonry walls with inadequate out-of-plane stiffness or strength may be stiffened with external structural members. The stiffening members should be proportioned to resist a tributary portion of seismic force applied normal to the plane of a masonry wall. Connections at the ends of the stiffening element should be provided to transfer the reaction force. Flexibility of the stiffening element should be considered where estimating seismic drift of a masonry wall panel.

Stiffness assumptions, strength criteria, and acceptable deformations for stiffened masonry walls should be consistent with existing masonry walls. The stiffening action that the new element provides shall be considered.

Veneer and Attachment Veneer, commonly a single wythe of unreinforced masonry units not tied to the core masonry wall by header courses, may be retrofitted as a part of the core wall by grouting the cavity between the veneer and core wall and installing ties from the veneer to the core wall. However, where cavities are filled, the effects of such alterations on the moisture and weathering resistance of the building should be considered. Spacing of the ties should conform to Section 6.2.2.10 of TMS 402.

11.3.2 Unreinforced Masonry (URM) Walls and Wall Piers Subject to In-Plane Actions Engineering properties of URM walls subjected to seismic forces applied parallel to their plane shall be determined in accordance with this section. Requirements of this section shall apply to cantilevered shear walls that are fixed against rotation at their base and to wall piers between window or door openings that are fixed against rotation top and bottom.

URM walls have five primary in-plane actions. Deformation-controlled in-plane actions of URM walls include rocking and bed-joint sliding that includes stair-step cracking through head and bed joints. Force-controlled in-plane actions of URM walls include toe crushing, diagonal tension that causes cracking through the masonry units, and vertical compression.

11.3.2.1 Stiffness of URM Walls and Wall Piers Subject to In-Plane Actions The stiffness of URM walls subjected to seismic in-plane forces shall be determined considering flexural, shear, and axial deformations.

The masonry assemblage of units, mortar, and grout shall be considered to be a homogeneous medium for stiffness computa-

tions with an expected elastic modulus in compression, E_{me}, as specified in Section 11.2.3.4.

For linear procedures, the stiffness of a URM wall or wall pier resisting seismic forces parallel to its plane shall be considered to be linear and proportional with the geometrical properties of the uncracked section, excluding veneer wythes.

Story shears in perforated shear walls shall be distributed to wall piers in proportion to the relative lateral uncracked stiffness of each wall pier.

Stiffnesses for existing and retrofitted walls shall be determined using principles of mechanics used for new walls.

C11.3.2.1 Stiffness of URM Walls and Wall Piers Subject to In-Plane Actions Laboratory tests of solid shear walls have shown that behavior can be depicted at low force levels using conventional principles of mechanics for homogeneous materials. In such cases, the lateral in-plane stiffness of a solid cantilevered shear wall, k, can be calculated using Eq. (C11-1):

$$k = \frac{1}{\dfrac{h_{\text{eff}}^3}{3E_m I_g} + \dfrac{h_{\text{eff}}}{A_v G_m}} \tag{C11-1}$$

where h_{eff} = wall height;
A_v = shear area;
I_g = moment of inertia for the gross section representing uncracked behavior;
E_m = masonry elastic modulus; and
G_m = masonry shear modulus.

Correspondingly, the lateral in-plane stiffness of a wall pier between openings with full restraint against rotation at its top and bottom can be calculated using Eq. (C11-2):

$$k = \frac{1}{\dfrac{h_{\text{eff}}^3}{12E_m I_g} + \dfrac{h_{\text{eff}}}{A_v G_m}} \tag{C11-2}$$

The design professional should be aware that a completely fixed condition is often not present in actual buildings.

Multi-wythe solid brick walls with effective header courses typically have not less than 10% of the surface area of a wythe connected with bonded solid headers extending not less than 4 in. (102 mm) into the adjacent wythe(s). The clear distance between adjacent full-length headers shall not exceed 24 in. (610 mm) measured vertically or horizontally. Where the backing consists of two or more wythes, the headers shall extend not less than 4 in. (102 mm) into the most distant wythe, or the backing wythes should be bonded together with separate headers with their area and spacing conforming to the foregoing.

Wythes of walls not bonded as described above should be considered veneer. Veneer wythes should not be included in the effective thickness used in calculating height-to-thickness ratios, stiffnesses, and strengths of walls.

11.3.2.2 Strength of URM Walls Subject to In-Plane Actions Expected in-plane strength of URM walls shall be the lesser of rocking strength in Section 11.3.2.2.1 or bed-joint sliding strength in Section 11.3.2.2.2.

Lower-bound in-plane strength of URM walls shall be the lesser of toe-crushing strength in Section 11.3.2.2.3 or diagonal tension strength in Section 11.3.2.2.4.

The latent onset of toe crushing for rocking walls and wall piers subjected to axial force and lateral deformation shall be considered in accordance with Sections 11.3.2.3.1 and 11.3.2.3.2. The effects of wall flanges, spandrels, and the vertical component of seismic loading shall be considered when determining in-plane strength.

C11.3.2.2 Strength of URM Walls Subject to In-Plane Actions Typically for URM piers with low levels of vertical axial stress, rocking or sliding governs the response. These actions have been observed to exhibit large displacement capacities; however, they can result in significant residual displacements. At higher levels of vertical axial stress, diagonal tension and toe-crushing force-controlled actions are more common (Moon 2004). Mixed modes, or more accurately, sequences of different behavior modes are common in URM wall pier experiments (FEMA 307 1998c). For example, rocking piers can sequence into bed-joint sliding as cracks propagate or toe crushing with increasing rotations. Mortar strength, aspect ratios, and vertical stresses are the most important factors determining the sequence of in-plane actions.

Wall spandrels that are stronger than piers can couple multiple piers and transmit overturning to adjacent piers, increasing axial forces in end piers and potentially changing their sequence of actions. Component tests on URM spandrels are available for reinforced concrete floor beams acting compositely with URM spandrels (Beyer and Dazio 2011) and arched URM spandrels (Knox 2012). Several full-scale and partial-scale tests of walls with openings also provide insight into the influence of spandrels (Paquette and Bruneau 2003 and Yi et al. 2006b). Estimates of spandrel strengths, though not confirmed by component tests, can be used to determine if spandrels are likely to be weaker or stronger compared to piers (FEMA 306 1998b).

The effects of global and component overturning and rocking of entire perforated walls depend on how effectively spandrels can transmit vertical shears and bending. Conversely, wall spandrels that are weak relative to adjacent piers may not provide fixity at the tops and bottoms of piers and may result in piers acting as cantilevers.

URM walls responding in-plane in an earthquake are often of nonrectangular section. Walls connected to and oriented perpendicular to in-plane walls are termed "flanges," "return walls," or "transverse walls." Costley and Abrams (1996), Paquette and Bruneau (2003), Moon et al. (2006), Yi et al. (2008), and Russell and Ingham (2010) recognized through experimental research that flanges have the potential to influence the response of walls that resist seismic forces in plane. Flanges can influence in-plane wall failure modes, maximum strengths, and displacement capacities. Flanges can significantly increase sliding and rocking strength but may only contribute to minor increases in diagonal tension strength. Flanges were found to increase the limiting drift of walls failing in diagonal tension.

Flanges are defined by Moon et al. (2006) as the portions of the walls oriented out-of-plane that participate with the walls oriented in the plane of seismic loading. Yi et al. (2008) noted that previous experimental research on URM building systems (Costley and Abrams 1996, Paquette and Bruneau 2003, Moon et al. 2006, and Yi et al. 2006b) highlighted the beneficial effects of flanges on the response of in-plane loaded walls and indicated the potential for flanges to influence maximum strength and pier failure modes. Paquette found that wall flanges increase overall wall stiffness for low-intensity ground motions compared with unflanged walls, but the influence of flanges on stiffness becomes significantly reduced after cracking in response to high-intensity ground motions. Following full-scale testing of a two-story URM building (Moon 2004, Yi 2004, Yi et al. 2006a, and Yi et al. 2006b) where significant flange participation was observed, Yi et al. (2008) developed an analytical model to investigate the effects of flanges on the behavior of individual nonrectangular

section URM piers. Yi et al. (2008) presumed an example wall and from a pushover analysis determined that the in-plane lateral strength of a wall with flanges could be expected to be greater compared with a similar wall with no flanges. It was also postulated by Yi et al. (2008) that the drift corresponding to lateral-force failure depends on the location of the flange in relation to the in-plane loaded wall. When the flange is at the toe of the wall (i.e., the flange is in compression), the flange reduces the compressive stress at the toe and delays toe-crushing failure. Conversely, when the flange is at the heel (i.e., the flange is in tension), the compressive stress in the toe increases because of the increased weight of the flange.

Russell and Ingham (2010) conducted further experimental analysis and also concluded that the effect of flanges on in-plane wall response can be significant. It was found that for URM walls with flanges, flexure is less likely as a behavior mode and shear is more likely to limit the lateral strength. It was also found that URM walls with flanges are able to sustain larger seismic forces than walls without flanges. Flanges were found to increase the displacement capacity of in-plane loaded walls when the flange is in compression, compared with similar walls without flanges. Moreover, a flange acting in tension increases the lateral strength of in-plane loaded walls. It was found that for walls with compression flanges and failing in a deformation-controlled action of stair-stepped cracking, the drift capacity at loss of seismic load capacity could be estimated to be 1.5 times greater than when no compression flange is present. This drift limit could be relaxed if a larger data set is available in the future.

One commonly used approach to model URM flanges is to assume that the lengths of flanges acting in compression are 6 times the thicknesses of the in-plane walls or the actual lengths of the flanges, whichever are less, consistent with TMS 402, and to assume that equivalent lengths of tension flanges to resist global or component overturning are based on likely crack patterns relating to uplift in flange walls (Yi et al. 2008). Other approaches that model or qualitatively consider different flange lengths may result in a variety of crack patterns and corresponding sequences of actions.

Axial stresses caused by the vertical component of seismic loading, including overturning and the interaction effects at wall intersections, can significantly alter the strengths and sequences of actions in URM wall piers, particularly those at ends of walls and with or without flanges. Explicit considerations of the effects of the vertical component of seismic loading and overturning are not recommended for linear procedures because realistic estimates of vertical load distributions are only feasible with nonlinear procedures. For nonlinear static and dynamic procedures, consider substituting Q_G +/– Q_E for P_D in Eqs. (11-2), (11-5), (11-6), (11-7), (11-8), (11-10), and (11-11). For nonlinear static and dynamic procedures, consider substituting $(Q_G$ +/– $Q_E)/A$ for f_a in Eqs. (11-11) and (11-12). Q_E is taken as the vertical component of the seismic loading.

11.3.2.2.1 Expected In-Plane Rocking Strength of URM Walls and Wall Piers Expected lateral strength, Q_{CE}, of URM walls or wall pier components shall be the expected rocking strength, calculated in accordance with Eq. (11-8):

$$Q_{CE} = V_r = 0.9(\alpha P_D + 0.5P_w)L/h_{\text{eff}} \qquad (11\text{-}8)$$

where h_{eff} = height to resultant of seismic force;
L = length of wall or wall pier;
P_D = superimposed dead load at the top of the wall or wall pier under consideration;
P_w = self weight of the wall pier;
V_r = strength of wall or wall pier based on rocking; and
α = factor equal to 0.5 for fixed-free cantilever wall, or equal to 1.0 for fixed-fixed wall pier.

C11.3.2.2.1 Expected In-Plane Rocking Strength of URM Walls and Wall Piers The rocking equation for expected lateral strength is a revised equation from ASCE 41-06 Eq. (11-8), that explicitly incorporates the weight of the wall or pier and its location. The factor 0.9 is an approximation that accounts for the difference in total pier length compared with the distance between the tension end of the pier and the location of the compression centroid. More accurate estimates of the location of the compression centroid can be used consistent with TMS 402 or considered explicitly within a nonlinear analysis building model or component-level moment curvature analysis.

Assumptions of fixity or cantilever action depend on the stiffness and overall integrity of the spandrels above and below rocking piers. The potential for spandrel uplift along a line of resistance caused by pier rocking and effects of vertical seismic acceleration can also significantly affect pier response (Fig. C11-2). The complete uplift of a spandrel from a pier can result in a loss of stability and shall not be permitted unless an alternate means of maintaining stability is provided.

For URM walls with openings of differing sizes and relatively weaker piers compared with stronger spandrels, Moon (2004) recommends that the effective height of each rocking pier be represented as the height over which a diagonal compression strut is most likely to develop in the pier at the steepest possible angle that would offer the least lateral resistance. As a result, effective

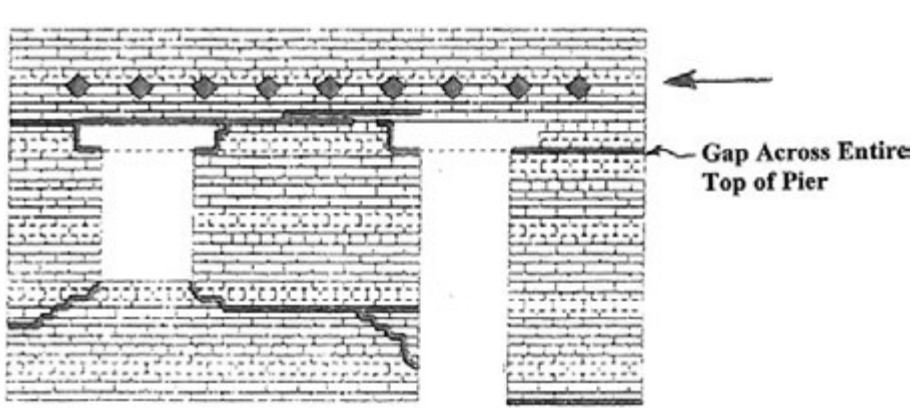

FIG. C11-2. Perforated URM Walls with Rocking Piers that Have Dissimilar Aspect Ratios and Relatively Strong Spandrels Can Result in Spandrel Uplift and Gaps Forming Across Entire Piers Rendering Relatively Slender Piers Ineffective and Potentially Unstable. Source: Paquette and Bruneau (2003)

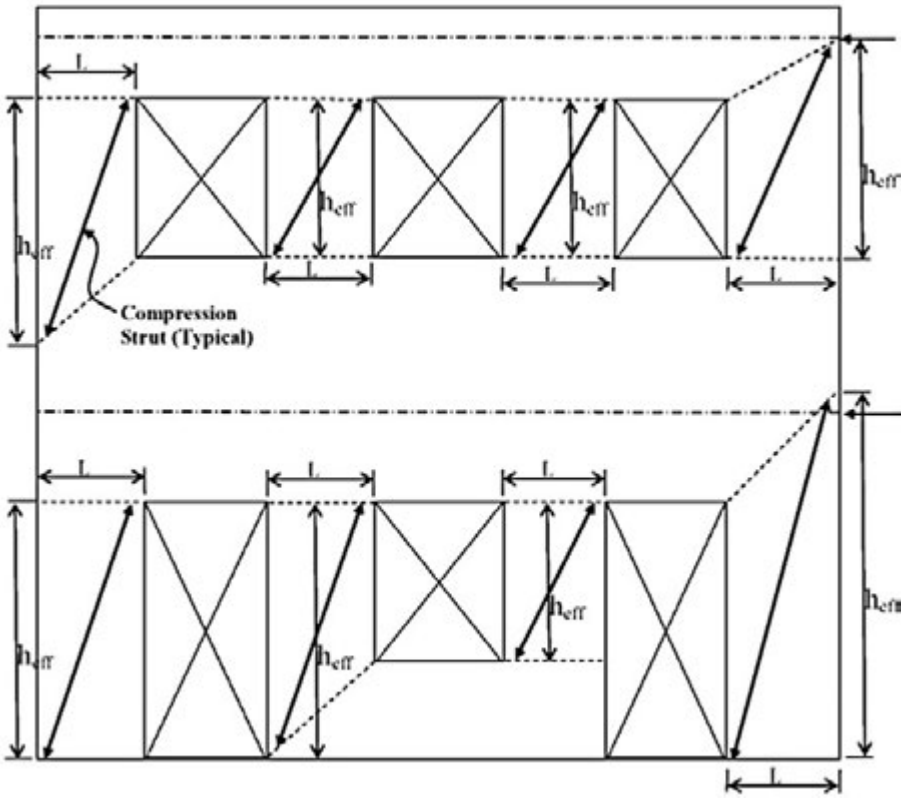

FIG. C11-3. URM Rocking Pier Effective Heights Based on Developing Diagonal Compression Struts that Vary with Direction of Seismic Force. Source: Adapted from Moon (2004)

heights for some rocking piers adjacent to unequal size openings vary depending upon the direction of loading. The angles at pier hinges generally depend on bed and head joint dimensions and stair-step cracking along mortar joints (Fig. C11-3).

Test results of entire wall systems suggest that assumptions of boundary conditions can vary greatly from actual conditions. In addition, where estimated expected strengths for rocking are similar to expected strengths for toe crushing or bed-joint sliding, slight variations in actual conditions may substantially alter the strengths, drifts, and sequences of actions in piers and spandrels. Flanged walls can have considerably higher rocking strengths than those calculated by assuming that no flanges exist, and other actions, particularly force-controlled actions, may control rocking piers with flanges.

For rocking wall piers with relatively high axial loads, toe crushing can often onset as a secondary yield mechanism when the pier is subjected to a sufficiently large drift. The rocking provisions included in this edition of the standard require the yield mechanism hierarchy to be explicitly considered. Given the potential for variation in response, users of this standard are encouraged to consider varying their assumptions about rocking wall and wall pier boundary conditions, effective pier heights, material properties, and yield hierarchy to determine the sensitivity of the expected performance.

11.3.2.2.2 Expected In-Plane Bed-Joint Sliding Strength of URM Walls and Wall Piers Expected initial lateral strength, Q_{CE}, of URM walls or pier components shall be calculated in accordance with Eq. (11-9):

$$Q_{CE} = V_{bjs1} = v_{me}A_n \tag{11-9}$$

where A_n = area of net mortared or grouted section of a wall or wall pier;

v_{me} = expected bed-joint sliding shear strength in accordance with Section 11.2.3.6; and

V_{bjs1} = expected initial shear strength of wall or pier based on bed-joint sliding shear strength.

Expected final lateral strength, $Q_{CE,F}$, of URM walls or pier components shall be calculated in accordance with Eq. (11-10):

$$Q_{CE,F} = V_{bjs2} = 0.5P_D \tag{11-10}$$

where P_D = superimposed dead load at top of the wall or pier under consideration; and

V_{bjs2} = expected final shear strength of wall or pier based on bed-joint sliding shear strength.

C11.3.2.2.2 Expected In-Plane Bed-Joint Sliding Strength of URM Walls and Wall Piers Results from experimental testing undertaken by Abrams (1992), Magnenes and Calvi (1992), Anthoine et al. (1995), Franklin et al. (2001), Bruneau and Paquette (2004), Moon et al. (2006), and Russell (2010) have confirmed that URM elements that exhibit bed-joint sliding behavior have substantial deformation capacity past initial cracking.

The capacity for bed-joint sliding in masonry elements is a function of frictional resistance and bond. The bond component is progressively degraded as cracking occurs until only the frictional component remains. Eq. (11-9) represents the initial uncracked bed-joint sliding strength and Eq. (11-10) the final frictional capacity as detailed in FEMA 306 (1998b).

A second form of bed-joint sliding cracking exists with weak mortar, strong units, and low compressive stress, when the cracks propagate in a stair-stepped manner in head and bed joints. This mechanism occurs because of the principal tension

stress in the applied stress state during earthquake loading exceeding the tension strength of the mortar joints, and there is considerable overlap between this behavior mode and diagonal tension cracking through masonry units. Drift limits for this failure mode were reported in a summary of experimental research in FEMA 307 (1998c) of up to 0.75%. More recently, Russell (2010) found that the URM walls with flanges could sustain in-plane seismic forces to a drift of up to 1.0% before loss of lateral force capacity when failing in this stair-stepped cracking mode, and for walls or piers without flanges, a similar drift limit of 0.4% was recommended. Priestley et al. (2007) suggest a drift limit of 0.4% for walls failing in a deformation-controlled, shear-dominated response.

11.3.2.2.3 Lower-Bound In-Plane Toe-Crushing Strength of URM Walls and Wall Piers Lower-bound lateral strength, Q_{CL}, of URM walls or pier components shall be based on lower-bound toe crushing calculated in accordance with Eq. (11-11):

$$Q_{CL} = V_{tc} = (\alpha P_D + 0.5P_W)\left(\frac{L}{h_{\text{eff}}}\right)\left(1 - \frac{f_a}{0.7\,f'm}\right) \quad (11\text{-}11)$$

where h_{eff}, L, and α are the same as given for Eq. (11-8);

f_a = axial compression stress caused by gravity loads specified in Eq. (7-1);

f'_m = lower-bound masonry compressive strength determined in accordance with Section 11.2.3.3;

P_D = superimposed dead load at the top of the wall or wall pier under consideration;

P_W = self-weight of the wall pier; and

V_{tc} = lower-bound shear strength based on toe crushing for a wall or wall pier.

C11.3.2.2.3 Lower-Bound In-Plane Toe-Crushing Strength of URM Walls and Piers Eq. (11-11) addresses toe crushing at the ends of walls and wall piers that can occur before other actions occur. In addition, toe crushing can occur after other actions initiate. See Section 11.3.2.3.2 for toe-crushing strength determination and acceptance criteria that occur after rocking initiates.

11.3.2.2.4 Lower-Bound In-Plane Diagonal Tension Strength of URM Walls and Wall Piers Lower-bound lateral strength, Q_{CL}, of URM walls or pier components shall be based on lower-bound diagonal tension calculated in accordance with Eq. (11-12):

$$Q_{CL} = V_{dt} = f'_{dt} A_n \beta \sqrt{1 + \frac{f_a}{f'_{dt}}} \quad (11\text{-}12)$$

where A_n = area of net mortared and/or grouted section of a wall or wall pier;

β = 0.67 for $L/h_{eff} < 0.67$, L/h_{eff} when $0.67 \geq L/h_{eff} \leq 1.0$, and 1.0 when $L/h_{eff} > 1.0$;

h_{eff} = height to resultant of seismic force;

L = length of wall or wall pier;

f_a = axial compression stress caused by gravity loads specified in Eq. (7-1);

f'_{dt} = lower-bound masonry diagonal tension strength; and

V_{dt} = lower-bound shear strength based on diagonal tension stress for wall or pier.

Substitution of the lower-bound bed-joint shear strength, v_{mL}, for the diagonal tension strength, f'_{dt} in Eq. (11-12) shall be permitted.

C11.3.2.2.4 Lower-Bound In-Plane Diagonal Tension Strength of URM Walls and Wall Piers In this behavior mode, diagonal cracking occurs in the masonry and involves complex mechanisms. This cracking is a result of the tension strength of the masonry being exceeded when subjected to the applied stress state during earthquake loading. The behavior mode is manifested by cracking directly through the masonry units. Cracking directly through the units—resulting from strong mortar, weak units, and high compressive stress—can be identified by diagonal cracks ("X" cracks) and occurs without significant ductile response. In many cases, the cracking is sudden and brittle, and vertical load capacity drops quickly. The cracks may then extend to the toe, and the triangles above and below the crack separate. In some cases, the load drop may be more gradual, with cracks increasing in size and extent with each cycle.

The lateral strength of walls or piers based on diagonal tension strength is determined using Eq. (11-12), which is taken from Turnšek and Sheppard (1980). This equation was calibrated for the range of $0.67 \leq L/h_{eff} \leq 1.0$ and requires determination of masonry diagonal tension strength, f'_{dt}. For walls with L/h_{eff} above or below the caps, using the capped values is recommended; however, users should be aware that no substantiating research is available. In lieu of determining the diagonal tension strength, the lower-bound bed-joint shear strength, v_{mL}, as measured with the in-place shear test, may be substituted where it is assumed that the lower-bound diagonal tension strength is equal to the lower-bound value of the bed-joint strength. However, this strength value only applies to the mortar, not the masonry units. Thus, there is considerable uncertainty in diagonal tension strength estimates.

For conditions where axial stresses on walls or wall piers are relatively low and the mortar strengths are also low compared with the splitting strengths of the masonry units, diagonal tension actions may be judged not to occur before bed-joint sliding. However, there is no available research to help determine a specific threshold of axial stress and relative brick and mortar strengths that differentiates whether cracking occurs through the units or through the mortar joints.

11.3.2.2.5 Lower-Bound Vertical Compressive Strength of URM Walls and Wall Piers Lower-bound vertical compressive strength of URM walls or wall pier components shall be limited by lower-bound masonry compressive stress in accordance with Eq. (11-13).

$$Q_{CL} = P_{CL} = 0.80(0.85 f'_m A_n) \quad (11\text{-}13)$$

where f'_m is equal to the lower-bound compressive strength determined in accordance with Section 11.2.3.3; and

A_n = area of net mortared and/or grouted section.

11.3.2.3 Acceptance Criteria for URM In-Plane Actions In-plane lateral shear of unreinforced masonry walls and wall piers in each line of resistance shall be considered a deformation-controlled action if the expected lateral rocking strength or bed-joint sliding strength of each wall or wall pier in the line of resistance, as specified in Sections 11.3.2.2.1 and 11.3.2.2.2, is less than the lower-bound lateral strength of each wall or wall pier limited by diagonal tension or toe crushing, as specified in Sections 11.3.2.2.3 and 11.3.2.2.4. URM walls that do not meet the criteria for deformation-controlled components shall be considered force-controlled components. Expected rocking strength, V_r, as specified in Section 11.3.2.2.1, shall be neglected in lines of resistance not considered deformation controlled. Axial compression on URM wall components shall be considered a force-controlled action.

C11.3.2.3 Acceptance Criteria for URM In-Plane Actions The sequence of in-plane actions is difficult to model reliably, particularly when actions have similar strengths or when combinations of actions can occur in one or more piers. Bidirectional

effects are also difficult to quantify reliably. The most commonly observed seismic threat posed by URM walls is falling material caused by in-plane shear damage or out-of-plane collapse caused by instability. Stiffness degradation caused by in-plane shear failures adds to the probability of out-of plane instability of the URM walls. Typically, out-of-plane failures initiate earlier than failures caused by in-plane actions.

11.3.2.3.1 Linear Procedures for In-Plane URM Wall Actions For the linear procedures in Sections 7.4.1 and 7.4.2, component actions shall be compared with capacities in accordance with Section 7.5.2.2. When in-plane URM wall response is governed by bed-joint sliding, V_{bjs1} shall be used when assessing component behavior at the Immediate Occupancy Performance Level and V_{bjs2} shall be used for all other Performance Levels. The *m*-factors for use with corresponding expected strength shall be obtained from Table 11-3.

C11.3.2.3.1 Linear Procedures for In-Plane URM Wall Actions

Rocking The revisions to Table 11-3 compared with Table 7-3 of ASCE 41-06 are based on test results of individual URM piers that had rocking as primary modes of response and had sufficient information to estimate yield drifts, maximum tested drifts, and axial stress ratios. The maximum *m*-factors are based on approximately 0.75 times the ratios of maximum tested drift to observed yield drift, and they account for pier aspect ratios. The maximum *m*-factors are a proxy for limiting allowable drifts of rocking piers. Test results consistently indicate that *m*-factors are reduced with increased wall and pier axial forces. The *m*-factors in ASCE 41-06 were generally based on lightly axially loaded piers. The *m*-factors for primary elements remain the same as those in Table 7-3 of ASCE 41-06, but a new restriction has been added to cap the axial stress ratios in rocking walls and piers because test results indicate that the *m*-factors generated from test results on piers that have stress ratios beyond this cap are less than the tabulated values. The *m*-factors for secondary elements have been reduced from the values in Table 7-3 of ASCE 41-06 to correlate with test results and the axial stress ratio limit (Xu and Abrams 1992, Magenes and Calvi 1995, Anthoine et al. 1995, Costley and Abrams 1996, Franklin et al. 2001, Paquette and Bruneau 2003, Yi et al. 2004, and Moon et al. 2006).

For guidance on evaluating the adequacy of solid bonded headers in multi-wythe solid brick rocking walls and wall piers, see Section C11.3.2.1.

Sliding The use of V_{bjs1} at the Immediate Occupancy Performance Level and V_{bjs2} at the other Performance Levels reflects the level of cracking expected to occur at each Performance Level.

11.3.2.3.2 Nonlinear Procedures for In-Plane URM Wall Actions For the nonlinear static procedure (NSP) in Section 7.4.3, wall and wall pier components shall meet the requirements of Section 7.4.3.2. For deformation-controlled components, nonlinear deformations shall not exceed the values given in Table 11-4. Variables *d*, *e* and *f*, representing nonlinear deformation capacities for primary and secondary components, shall be expressed in terms of drift ratio percentages as defined in Fig. 11-1(a).

For the nonlinear dynamic procedure (NDP) given in Section 7.4.4, wall and wall pier components shall meet the requirements of Section 7.4.4.2. Nonlinear force–deflection relations for deformation-controlled wall and wall pier components shall be established based on the information given in Table 11-4, or an approved procedure based on a comprehensive evaluation of the hysteretic characteristics of those components.

Table 11-3. Linear Static Procedure—*m*-Factors for URM In-Plane Walls and Wall Piers

	Performance Level				
	Primary			Secondary	
Limiting Behavioral Mode	IO	LS	CP	LS	CP
Rocking[a,b]	$1 \le 1.5h_{eff}/L \le 1.5$	$1.5 \le 3h_{eff}/L^b \le 3.75$	$2 \le 4h_{eff}/L^b \le 5$	$2 \le 4h_{eff}/L^b \le 5$	$3 \le 6h_{eff}/L^b \le 8$
Bed-joint sliding	1	3	4	6	8

[a]All rocking-controlled walls and wall piers shall comprise a minimum thickness of 6 in. and, for solid brick masonry, a minimum of two wythes. Multi-wythe solid brick masonry walls and wall piers shall be connected with bonded solid headers.
[b]*m*-factors for rocking apply only for walls and wall piers with f_a/f'_m ratios less than or equal to 4%, unless it can be demonstrated by analysis using moment curvature or other acceptable means that toe crushing does not occur at the expected pier drift; otherwise, walls and wall piers shall be considered force controlled. Alternatively, nonlinear procedures and acceptance criteria should be used, in accordance with Section 11.3.2.3.2.

Table 11-4. Nonlinear Procedures—Simplified Force-Deflection Relations for URM In-Plane Walls and Wall Piers[a]

	Limiting Behavior Mode				Acceptance Criteria Performance Level		
Residual Strength Ratio	*c* (%)	*d* (%)	*e* (%)	*f* (%)	IO (%)	LS (%)	CP (%)
Rocking[b]	$V_{tc,r}/V_r$	$100\Delta_{tc,r}/h_{eff}$	$100\Delta_{tc,r}/h_{eff}$	$100(\Delta_{tc,r}+\Delta_y)/h_{eff}$	0.1	$0./h_{eff}$ but not greater than 2.25%	$100\Delta_{tc,r}/h_{eff}$ but not greater than 2.5%
Bed-joint sliding	V_{bjs2}/V_{bjs1}[d]	0.4	1.0	$1.0+100\Delta_y/h$[c]	0.1	0.75	1.0

[a]Interpolation shall be used between table values.
[b]All rocking walls and wall piers shall comprise a minimum thickness of 6 in. and, for solid brick masonry, a minimum of two wythes. Multi-wythe solid brick walls and wall piers shall be connected with bonded solid headers. $V_{tc,r}$ is the seismic shear force associated with the onset of toe crushing after rocking initiates. The axial compressive stress on the toe caused by gravity loads, f_a, shall be based on the strain of the rocking pier and an equivalent compression zone of the effective net section of the rocking pier that is in bearing immediately before the onset of crushing, consistent with Section 3.3.2(g) of TMS 402, or some other analytical approach based on engineering mechanics and the stress–strain response of the materials that comprise the pier and its interface with supporting components. $\Delta_{tc,r}$ is the lateral displacement associated with the onset of toe crushing $V_{tc,r}$.
[c]Point *f* on the force–deformation curve where vertical-load-carrying capacity is diminished shall be based on the drift associated with no greater than one-half the width of the masonry units or units at the spring line of masonry arches, assuming that bed-joint sliding occurs entirely within one bed joint in a wall or pier.
[d]V_{bjs1} and V_{bjs2} shall be calculated in accordance with Section 11.3.2.2.2.

C11.3.2.3.2 Nonlinear Procedures for In-Plane URM Wall Actions Where the NSP is used to analyze in-plane URM wall actions for three-dimensional building models with flexible diaphragms, consideration must be given to appropriate horizontal distributions of the static point loads at each floor. In such cases, the distribution of static point loads at each floor should be an approximation of the expected horizontal distribution of seismic inertial forces. For URM buildings with flexible diaphragms, see Section C7.2.9 and Eq. (C7-1) for the distribution of inertial forces in the diaphragm.

Rocking The revision to Fig. C11-4 from Fig. 7-4 of ASCE 41-06 is intended to provide the user of this standard with a generalized force–deformation relationship that is consistent with the engineering mechanics of a rocking system and test results of individual rocking URM piers.

The nonlinear response of rocking URM piers is generally characterized by a negative postyield slope caused by P-delta effects and eventual toe crushing as the effective bearing area at the toe of the rocking pier reduces to zero under increasing lateral displacement. This latent toe crushing differs from that specified in Section 11.3.2.2.3 because it typically occurs at larger rotations and lower shears. The deformation associated with the onset of toe crushing shall either be explicitly considered in the nonlinear analysis or established and checked (e.g., using expected deformation demands obtained from the analysis) using a moment-curvature or similar analytical approach. Under rare conditions, geometric stability of the rocking pier caused by P-delta effects may govern the ultimate deformation capacity. It should also be noted that the rocking systems exhibit very low levels of hysteretic damping. In the absence of substantiating test results, elastic unloading hysteretic characteristics shall be assumed for rocking URM in-plane walls and wall piers.

The revisions to the rocking modeling and acceptance criteria in Table 11-4 from Table 7-4 of ASCE 41-06 provides alignment with Fig. C11-4. Furthermore, upper-bound limits on drift have been added based on test results of individual URM piers that had rocking as primary modes of response (Xu and Abrams 1992, Anthoine et al. 1995, Magenes and Calvi 1995, Costley and Abrams 1996, Franklin et al. 2001, Paquette and Bruneau 2003, Yi 2004, and Moon et al. 2006). The test results indicate that for URM walls governed by an initial rocking response, drifts of at least 1.5% are sustainable for certain configurations of aspect ratio and axial load, with nominal strength degradation, provided that toe crushing is not found to control at lower drifts. For drifts greater than 1.5%, out-of-plane effects (e.g., twisting of piers at their bases) can influence wall performance. Users of this standard are cautioned as to the increased fragility of rocking piers subjected to the drift criteria for secondary elements, which are recommended only for use with piers with a minimum thickness of 12 in. to minimize the risk of bearing loss caused by out-of-plane effects.

For guidance on evaluating the adequacy of solid bonded headers in multi-wythe (multi-leaf) solid brick rocking walls and wall piers, see Section C11.3.2.1.

Sliding Research results indicate that secondary component deformation limits for Life Safety and Collapse Prevention can be increased (Magenes and Calvi 1992, Manzouri 1995, and Russell 2010). Moon et al. (2006) recommends a representative force deformation curve shown in Fig. C11-5. As bed joints slide, there is a gradual increase in axial stress and corresponding reduction in axial strength as the amount of wall or wall pier in bearing decreases. In the case of sliding, localized loss of bearing, particularly at the spring lines of arched lintels or at header courses at the ends of piers, occurs. Several test results are available out to 1% drift, but there are only two tests beyond that. Users should consider the layup of masonry at header courses, steel or concrete lintel bearing lengths and spring lines of masonry arches when determining the potential for loss of vertical-load-carrying capacity. The one-half masonry unit width limit for *f* is based on judgment because no available tests currently extend to that drift level. Other values for limiting loss of vertical-load-carrying capacity may be appropriate, depending on the specific layup of each wall, pier, or lintel. See the plot of the reduction of vertical-load-carrying capacity versus demand in Fig. C11-5. Vertical-load-carrying capacity beyond point *e* is expected; however, very limited, unidirectional test data are

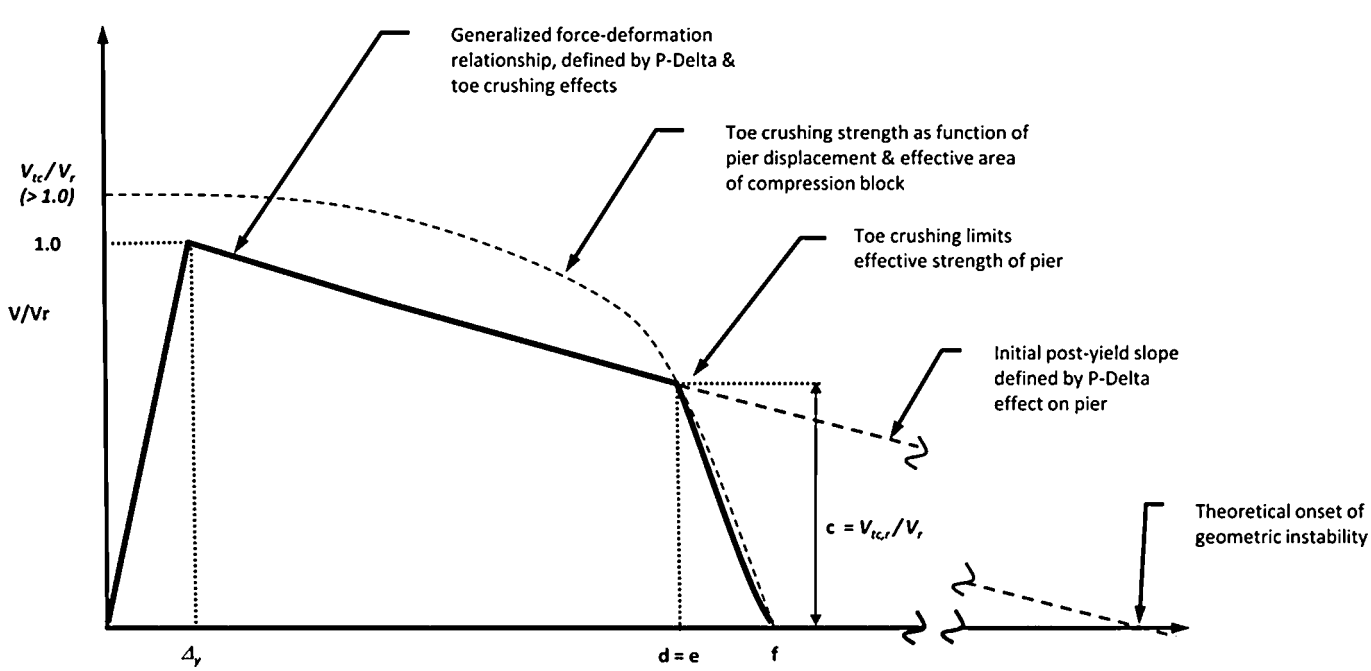

FIG. C11-4. Generalized Force–Deformation Relationship for Rocking URM Walls or Wall Piers

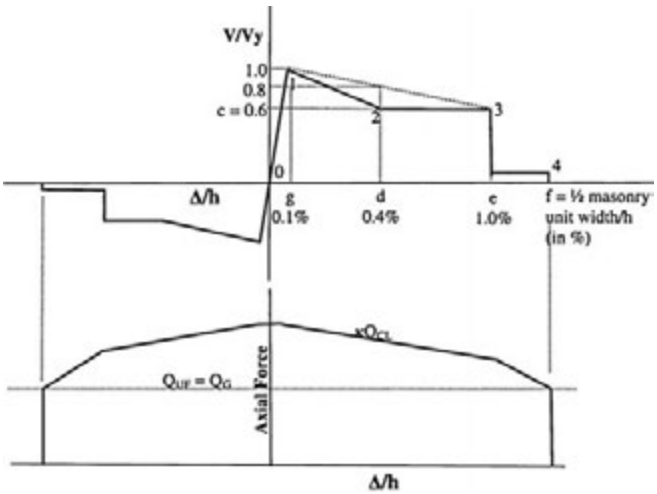

FIG. C11-5. Bed-Joint Sliding Action in URM Walls

available beyond point *e*. No bidirectional tests are currently available that account for the potentially earlier loss of vertical load-carrying capacity before point *f* that could be caused by out-of-plane actions compromising in-plane actions.

Pier heights, *h,* in Table 11-4 for sliding can be assumed to be consistent with effective heights for rocking, in accordance with Fig. C11-3.

11.3.3 Unreinforced Masonry Walls Subject to Out-of-Plane Actions As required by Section 7.2.11, out-of-plane stability of URM walls shall be evaluated for out-of-plane inertial forces by considering components to span vertically between diaphragm levels when effective wall-to-diaphragm connections are present, or to span horizontally between intersecting walls, columns, or pilasters, or to span with two-way action. URM walls shall not be analyzed for out-of-plane actions using the linear static procedure (LSP) or nonlinear static procedure (NSP) prescribed in Chapter 7.

11.3.3.1 Stiffness of URM Walls Subject to Out-of-Plane Actions The out-of-plane stiffness of walls shall be neglected in analytical models that consider the characteristics of the global structural system in the orthogonal direction.

11.3.3.2 Strength of URM Walls Subject to Out-of-Plane Actions Unless arching action is considered, flexural cracking shall be limited by the expected tensile stress values given in Section 11.2.3.5.

Arching action shall be considered only if surrounding floor, roof, column, or pilaster elements have sufficient stiffness and strength to resist thrusts from arching of a wall panel and a condition assessment has been performed to ensure that there are no gaps between a wall panel and the adjacent structure. The eccentricity of arching action shall be considered when evaluating wall behavior.

The condition of the collar joint shall be considered where estimating the effective thickness of a wall for out-of-plane behavior. The effective void ratio shall be taken as the ratio of the collar joint area without mortar to the total area of the collar joint. Wythes separated by collar joints that are not bonded or that have an effective void ratio greater than 50% shall not be considered part of the effective thickness of the wall for out-of-plane behavior. For cavity walls, the thickness of veneer shall not be considered part of the effective thickness of the wall for out-of-plane behavior, and transfer of out-of-plane forces from veneer to the backing wall shall be ensured by providing properly designed wall ties.

Table 11-5. Permissible *h/t* Ratios for URM Subject to Out-of-Plane Actions

Wall Types	$S_{x1} \le 0.24\ g$	$0.24\ g < S_{x1} \le 0.37\ g$	$S_{x1} > 0.37\ g$
Walls of one-story buildings	20	16	13
First-story wall of multistory building	20	18	15
Walls in top story of multistory building	14	14	9
All other walls	20	16	13

C11.3.3.2 Strength of URM Walls Subject to Out-of-Plane Actions In situ tests have shown that timber diaphragms provide no arching action. Veneers, outer wythes of cavity walls, and wythes without adequate header courses or with effective collar joint void ratios greater than 50% should not be considered as part of the effective thickness of URM walls for out-of-plane actions. However, for in-plane resistance, effective thickness can include the sum of all wythes, without necessarily considering the condition of the collar joints.

11.3.3.3 Acceptance Criteria for URM Walls Subject to Out-of-Plane Actions For the Immediate Occupancy Structural Performance Level, flexural cracking in URM walls caused by out-of-plane inertial loading shall not be permitted. Bed-joint flexural tensile strength is limited by Section 11.3.3.2 or Table 11-2(a). For the Life Safety Structural Performance Level, flexural cracking in URM walls caused by out-of-plane inertial loading shall be permitted, provided that cracked wall segments remain stable during dynamic excitation. Stability shall be checked using analytical time-step integration models considering acceleration time histories at the top and base of a wall panel. For the Collapse Prevention Structural Performance Level, stability need not be checked for walls spanning vertically with a height-to-thickness (*h/t*) ratio less than that given in Table 11-5.

C11.3.3.3 Acceptance Criteria for URM Walls Subject to Out-of-Plane Actions For further information on evaluating the stability of URM walls out-of-plane, refer to *Methodology for Mitigation of Seismic Hazards in Existing Unreinforced Masonry Buildings* (ABK 1984).

The suggested slenderness ratios assume that existing wall-to-diaphragm connections are sufficient to carry inertial forces from the wall into the diaphragm. Timber diaphragms shall be strengthened so that they can carry the forces transferred through connections to out-of-plane loaded walls. Wall to diaphragm connections are essential to achieve out-of-plane stability because walls that have inadequate connections to top diaphragms respond in cantilever modes and are much less stable. Research by Lam et al. (1995) and Doherty (2000) has shown that the seismic behavior of freestanding URM walls is analogous to that of a four times more slender simply supported URM wall.

More recent research indicates that *h/t* ratios in Table 11-5 may be conservative for undamaged URM walls responding to non-near-source ground motions with S_{a1} less than 0.45*g* (Simsir et al. 2004, Sharif et al. 2007, Dizhur et al. 2010, and Derakhshan 2011). However, research on the influence of near-source ground motions with long pulses on out-of-plane actions (Derakhshan 2011) suggests that *h/t* ratios in high seismic regions can be unconservative. Research has also suggested that the behavior

of walls that have the same slenderness ratio but different thickness is different (Sorrentino et al. 2008 and Derakhshan 2011). Derakhshan (2011) suggests that of walls having the same slenderness ratio, thicker walls are generally more stable. These findings suggest that future research should be directed to study out-of-plane wall behavior by considering wall thickness.

Sorrentino et al. (2008) and Derakhshan (2011) have suggested that crack height substantially influences wall stability and that analytical models should consider an appropriate crack height. In addition, research to date has not captured all significant variables influencing the performance of out-of-plane URM walls. For example, research is currently under way to address the influence of in-plane demands on out-of-plane actions, overburden eccentricities, and dynamic characteristics of diaphragms (Penner and Elwood 2011).

Research to date has also focused on Collapse Prevention, so the margin between Life Safety and collapse is poorly understood because it has not been explicitly quantified. Localized loss of masonry units may still occur for URM walls that meet these criteria, potentially resulting in falling hazards that can cause serious injury.

Analytical studies that have attempted to capture the response of out-of-plane actions suggest that rigid-body rocking models that account for impact-based collision and restitution can be more reliable than oscillator-based models or displacement-based models (Doherty et al. 2000, Griffith et al. 2003, Lam et al. 2003, Makris and Konstantinidis 2003, and Sharif et al. 2007).

11.3.4 Reinforced Masonry Walls and Wall Piers In-Plane

11.3.4.1 Stiffness of Reinforced Masonry Walls and Wall Piers In-Plane The stiffness of reinforced masonry (RM) wall or wall pier components in plane shall be determined as follows:

1. The shear stiffness of RM wall components shall be based on uncracked section properties; and
2. The flexural stiffness of RM wall components shall be based on cracked section properties. Use of a cracked moment of inertia equal to 50% of I_g shall be permitted.

In either case, veneer wythes shall not be considered in the calculation of wall component properties.

11.3.4.2 Strength of Reinforced Masonry Walls and Wall Piers In-Plane The strength of existing, retrofitted, and new RM wall or wall pier components in flexure, shear, and axial compression shall be determined in accordance with this section. Design actions (axial, flexure, and shear) on components shall be determined in accordance with Chapter 7 of this standard, considering gravity loads and the maximum forces that can be transmitted based on a limit-state analysis.

11.3.4.2.1 Flexural Strength of Walls and Wall Piers Expected flexural strength of an RM wall or wall pier shall be determined based on strength design procedures specified in TMS 402.

11.3.4.2.2 Shear Strength of Walls and Wall Piers The expected and lower-bound shear strength of RM wall or wall pier components shall be determined based on strength design procedures specified in TMS 402.

11.3.4.2.3 Vertical Compressive Strength of Walls and Wall Piers Lower-bound vertical compressive strength of existing RM wall or wall pier components shall be determined based on strength design procedures specified in TMS 402.

11.3.4.2.4 Additional Strength Considerations for Flanged Walls Wall intersections shall be considered effective in transferring shear where either condition (1) or (2) and condition (3) are met:

1. The face shells of hollow masonry units are removed and the intersection is fully grouted;
2. Solid units are laid in running bond, and 50% of the masonry units at the intersection are interlocked; and
3. Reinforcement from one intersecting wall continues past the intersection a distance not less than 40 bar diameters or 24 in.

The width of flange considered effective in compression on each side of the web shall be taken as the lesser of six times the thickness of the web, half the distance to the next web, or the actual flange on either side of the web wall.

The width of flange considered effective in tension on each side of the web shall be taken as the lesser of three-fourths of the wall height, half the distance to an adjacent web, or the actual flange on either side of the web wall.

11.3.4.3 Acceptance Criteria for In-Plane Actions of Reinforced Masonry Walls The shear required to develop the expected strength of RM walls and wall piers in flexure shall be compared with the lower-bound shear strength. For RM wall components governed by flexure, flexural actions shall be considered deformation controlled. For RM components governed by shear, shear actions shall be considered deformation controlled. Axial compression on RM wall or wall pier components shall be considered a force-controlled action.

11.3.4.3.1 Linear Procedures for In-Plane Actions of Reinforced Masonry Walls For the linear procedures of Sections 7.4.1 and 7.4.2, component actions shall be compared with capacities in accordance with Section 7.5.2.2. The *m*-factor for use in Eq. (7-36) for those components classified as deformation controlled shall be as specified in Table 11-6.

For determination of *m*-factors from Table 11-6, the ratio of vertical compressive stress to expected compressive strength, f_{ae}/f_{me}, shall be based on gravity compressive force determined in accordance with the load combinations given in Eqs. (7-1) and (7-2).

11.3.4.3.2 Nonlinear Procedures for In-Plane Actions of Reinforced Masonry Walls For the NSP of Section 7.4.3, wall and wall pier components shall meet the requirements of Section 7.5.3.2. Nonlinear deformations on deformation-controlled components shall not exceed the values given in Table 11-7. Variables *d* and *e*, representing nonlinear deformation capacities for primary and secondary components, shall be expressed in terms of story drift ratio percentages, as defined in Fig. 11-1.

For determination of the *c*, *d*, and *e* values and the acceptable drift levels using Table 11-7, the vertical compressive stress, f_{ae}, shall be based on gravity compressive force determined in accordance with the load combinations given in Eqs. (7-1) and (7-2).

For the NDP of Section 7.4.4, wall and wall pier components shall meet the requirements of Section 7.5.3.2. Nonlinear force–deflection relations for deformation-controlled wall and wall pier components shall be established based on the information given in Table 11-7, or an approved procedure based on comprehensive evaluation of the hysteretic characteristics of those components.

C11.3.4.3.2 Nonlinear Procedures for In-Plane Actions of Reinforced Masonry Walls For linear procedures, collapse is considered at lateral drift percentages exceeding values of *d* in Table 11-7, and the Life Safety Structural Performance Level is considered at approximately 75% of *d*. For nonlinear procedures, collapse is considered at lateral drift percentages exceeding the

Table 11-6. Acceptance Criteria for Linear Procedures—Reinforced Masonry In-Plane Walls

			m-Factors[a]				
			Performance Level				
				Component Type			
				Primary		Secondary	
f_{ae}/f_{me}	L/h_{eff}	$\rho_g f_{ye}/f_{me}$[b]	IO	LS	CP	LS	CP
Wall Components Controlled by Flexure							
0.00	≤0.5	≤0.01	4.0	7.0	8.0	8.0	10.0
		0.05	2.5	5.0	6.5	8.0	10.0
		≥0.20	1.5	2.0	2.5	4.0	5.0
	1.0	≤0.01	4.0	7.0	8.0	8.0	10.0
		0.05	3.5	6.5	7.5	8.0	10.0
		≥0.20	1.5	3.0	4.0	6.0	8.0
	≥2.0	≤0.01	4.0	7.0	8.0	8.0	10.0
		0.05	3.5	6.5	7.5	8.0	10.0
		≥0.20	2.0	3.5	4.5	7.0	9.0
0.038	≤0.5	≤0.01	3.0	6.0	7.5	8.0	10.0
		0.05	2.0	3.5	4.5	7.0	9.0
		≥0.20	1.5	2.0	2.5	4.0	5.0
	1.0	≤0.01	4.0	7.0	8.0	8.0	10.0
		0.05	2.5	5.0	6.5	8.0	10.0
		≥0.20	1.5	2.5	3.5	5.0	7.0
	≥2.0	≤0.01	4.0	7.0	8.0	8.0	10.0
		0.05	3.5	6.5	7.5	8.0	10.0
		≥0.20	1.5	3.0	4.0	6.0	8.0
0.075	≤0.5	≤0.01	2.0	3.5	4.5	7.0	9.0
		0.05	1.5	3.0	4.0	6.0	8.0
		≥0.20	1.0	2.0	2.5	4.0	5.0
	1.0	≤0.01	2.5	5.0	6.5	8.0	10.0
		0.05	2.0	3.5	4.5	7.0	9.0
		≥0.20	1.5	2.5	3.5	5.0	7.0
	≥2.0	≤0.01	4.0	7.0	8.0	8.0	10.0
		0.05	2.5	5.0	6.5	8.0	10.0
		≥0.20	1.5	3.0	4.0	4.0	8.0
Wall Components Controlled by Shear							
All cases[c]	All cases[c]	All cases[c]	2.0	2.0	3.0	2.0	3.0

[a]Interpolation shall be used between table values.
[b]$\rho_g = \rho_v + \rho_h$.
[c]For wall components governed by shear, the axial stress f_{ae} on the member must be less than or equal to 0.15 $f'm$; otherwise, the component shall be treated as force controlled.

values of *e* in the table, and the Life Safety Structural Performance Level is considered at approximately 75% of *e*.

11.3.5 Reinforced Masonry Wall Out-of-Plane Actions RM walls shall be capable of resisting out-of-plane inertial forces as isolated components spanning between floor levels and/or spanning horizontally between columns or pilasters. Walls shall not be analyzed out of plane with the LSP or NSP prescribed in Chapter 7, but they shall be capable of resisting out-of-plane inertial forces as given in Section 7.2.11 or shall be capable of responding to earthquake motions as determined using the NDP, while satisfying the deflection criteria given in Section 11.3.5.3.

11.3.5.1 Stiffness—Reinforced Masonry Wall Out-of-Plane Actions RM walls shall be considered local elements spanning out of plane between individual story levels.

The out-of-plane stiffness of walls shall be neglected in analytical models of the global structural system.

Stiffness shall be based on the net mortared or grouted area of the uncracked section, provided that net flexural tensile stress does not exceed the expected tensile strength, f_{te}, in accordance with Section 11.2.3.5.

Table 11-7. Modeling Parameters and Acceptance Criteria for Nonlinear Procedures—Reinforced Masonry In-Plane Walls

						Acceptable Drift Ratio (%)[a]		
						Performance Level		
f_{ae}/f_{me}	L/h_{eff}	$\rho_g f_{ye}/f_{me}$	Residual Strength Ratio *c*	*d* (%)	*e* (%)	IO (%)	LS (%)	CP (%)
Wall Components Controlled by Flexure								
0.00	≤0.5	0.01	0.5	2.6	5.3	1.0	3.9	5.3
		0.05	0.6	1.1	2.2	0.4	1.6	2.2
		0.20	0.7	0.5	1.0	0.2	0.7	1.0
	1.0	0.01	0.5	2.1	4.1	0.8	3.1	4.1
		0.05	0.6	0.8	1.6	0.3	1.2	1.6
		0.20	0.7	0.3	0.6	0.1	0.5	0.6
	≥2.0	0.01	0.5	1.6	3.3	0.6	2.5	3.3
		0.05	0.6	0.6	1.3	0.2	0.9	1.3
		0.20	0.7	0.2	0.4	0.1	0.3	0.4
0.038	≤0.5	0.01	0.4	1.0	2.0	0.4	1.5	2.0
		0.05	0.5	0.7	1.4	0.3	1.0	1.4
		0.20	0.6	0.4	0.9	0.2	0.7	0.9
	1.0	0.01	0.4	0.8	1.5	0.3	1.1	1.5
		0.05	0.5	0.5	1.0	0.2	0.7	1.0
		0.20	0.6	0.3	0.6	0.1	0.4	0.6
	≥2.0	0.01	0.4	0.6	1.2	0.2	0.9	1.2
		0.05	0.5	0.4	0.7	0.1	0.5	0.7
		0.20	0.6	0.2	0.4	0.1	0.3	0.4
0.075	≤0.5	0.01	0.3	0.6	1.2	0.2	0.9	1.2
		0.05	0.4	0.5	1.0	0.2	0.8	1.0
		0.20	0.5	0.4	0.8	0.1	0.6	0.8
	1.0	0.01	0.3	0.4	0.9	0.2	0.7	0.9
		0.05	0.4	0.4	0.7	0.1	0.5	0.7
		0.20	0.5	0.2	0.5	0.1	0.4	0.5
	≥2.0	0.01	0.3	0.3	0.7	0.1	0.5	0.7
		0.05	0.4	0.3	0.5	0.1	0.4	0.5
		0.20	0.5	0.2	0.3	0.1	0.2	0.3
Wall Components Controlled by Shear								
All cases[b]	All cases[b]	All cases[b]	0.4	0.75	2.0	0.4	0.75	1.5

[a]Interpolation shall be used between table values.
[b]For wall components governed by shear, the axial load on the member must be less than or equal to 0.15 $A_g f'm$; otherwise, the component shall be treated as force-controlled.

Stiffness shall be based on the cracked section for a wall where the net flexural tensile stress exceeds the expected tensile strength.

Stiffnesses for existing and new reinforced out-of-plane walls shall be assumed to be the same.

11.3.5.2 Strength—Reinforced Masonry Wall Out-of-Plane Actions Expected flexural strength shall be based on Section 11.3.4.2.1. For walls with an *h*/*t* ratio exceeding 20, second-order moment effects caused by out-of-plane deflections shall be considered.

11.3.5.3 Acceptance Criteria for Reinforced Masonry Wall Out-of-Plane Actions Out-of plane forces on RM walls shall be considered force-controlled actions. Out-of-plane RM walls shall be sufficiently strong in flexure to resist the out-of-plane loads prescribed in Section 7.2.11.

If the NDP is used, the following performance criteria shall be based on the maximum out-of-plane deflection normal to the plane of a wall:

1. For the Immediate Occupancy Structural Performance Level, the out-of-plane story drift ratio shall be equal to or less than 2%;
2. For the Life Safety Structural Performance Level, the out-of-plane story drift ratio shall be equal to or less than 3%; and

3. For the Collapse Prevention Structural Performance Level, the out-of-plane story drift ratio shall be equal to or less than 5%.

C11.3.5.3 Acceptance Criteria for Reinforced Masonry Wall Out-of-Plane Actions The limit states specified in this section are based on the masonry units that have significant cracking for Immediate Occupancy (IO), masonry units at a point of being dislodged and falling out of the wall for Life Safety (LS), and masonry units on the verge of collapse for Collapse Prevention (CP).

11.4 MASONRY INFILLS

The requirements of this section shall apply to masonry infill panels composed of any combination of existing panels, panels enhanced for seismic retrofit, and new panels added to an existing building for seismic retrofit. The procedures for determination of stiffness, strength, and deformation of masonry infills shall be based on this section and used with the analytical methods and acceptance criteria prescribed in Chapter 7, unless noted otherwise.

Masonry infill panels shall be considered primary elements of a seismic-force-resisting system. For the Collapse Prevention Structural Performance Level, if the analysis shows that the surrounding frame remains stable after the loss of an infill panel, such infill panels not meeting the acceptance criteria of this section shall be permitted.

C11.4 MASONRY INFILLS

The design professional is referred to TMS 402, TMS 602, Angel et al. (1994), FEMA 306 (1998b), FEMA 307 (1998c), FEMA 308 (1998d), and Stavridis (2009) for additional information regarding the engineering properties of masonry infills.

11.4.1 Types of Masonry Infills Infills shall include masonry panels built partially or fully within the plane of steel or concrete frames and bounded by beams and columns.

Infill panel types considered in this standard include unreinforced clay-unit masonry, solid concrete masonry, hollow-unit concrete masonry, and hollow-clay tile masonry. Infills made of stone or glass block are not addressed in this standard.

Infill panels shall be considered isolated from the surrounding frame when there are gaps at the top and two sides that accommodate maximum expected lateral frame deflections. Isolated panels shall be restrained in the transverse direction to ensure stability under out-of-plane forces. Panels in full contact with the frame elements on all four sides are termed "shear infill panels." For these panels, the forces exerted on the bounding frame members and connections caused by the frame–infill interaction shall be evaluated.

11.4.1.1 Existing Masonry Infills Existing masonry infills considered in this section shall include all structural infills of a building system that are in place before seismic retrofit. Infill types included in this section consist of unreinforced panels and composite or noncomposite panels. For existing infill panels, the seismic forces applied within their plane shall be considered separately as described in Section 11.4.2 from the forces normal to their plane, as described in Section 11.4.3.

Existing masonry infills shall be assumed to behave the same as new masonry infills, provided that the masonry is in good or fair condition as defined in this standard.

C11.4.1.1 Existing Masonry Infills It is well known that for undamaged infill panels, the arching action provides significant resistance to the out-of-plane forces. This action decreases when the infill is damaged because of in-plane forces. The exact deterioration mechanisms cannot be reliably quantified, and therefore the two actions are currently considered separately.

11.4.1.2 New Masonry Infills New masonry infills shall include all new panels added to an existing seismic-force-resisting system for structural retrofit. New elements shall be designed in accordance with this standard and detailed and constructed in accordance with an approved building code.

11.4.1.3 Retrofitted Masonry Infills Retrofitted masonry infill panels shall include existing infills that are enhanced by an approved method.

C11.4.1.3 Retrofitted Masonry Infills Masonry infills may be retrofitted using the methods described in this section. Masonry infills enhanced in accordance with this section should be analyzed using the same procedures and performance criteria used for new infills.

Unless stated otherwise, methods applicable to unreinforced infills are intended to improve performance of masonry infills subjected to in-plane and/or out-of-plane forces.

Guidelines from the following sections pertaining to retrofit methods for reinforced masonry walls listed in Section C11.3.1.3 may also apply to URM infill panels: (1) infilled openings, (2) shotcrete, (3) coatings and near-surface mounted reinforcement for URM walls, (4) grout injections, (5) repointing, and (6) stiffening elements. In addition, the following two retrofit methods may apply to masonry infill panels.

Boundary Restraints for Infill Panels Infill panels not in tight contact with perimeter frame members cannot develop arching action and should be restrained for out-of-plane forces. This goal may be accomplished by installing steel angles or plates on each side of the infills and welding or bolting the angles or plates to the perimeter frame members.

Filling Gaps between Infill Panels and Bounding Frames Gaps between an infill panel and the surrounding frame may be filled if integral infill–frame action is assumed for in-plane response. Testing of material used to fill gaps is recommended to document compressive stiffness, bonding to infill and frame, and fire resistance.

11.4.2 Masonry Infill In-Plane Actions The calculation of masonry infill in-plane stiffness and strength based on nonlinear finite element analysis of a composite frame substructure with infill panels that account for the presence of openings, postyield cracking, and cyclic degradation of masonry shall be permitted. The use of simplified numerical models with diagonal struts to simulate the effect of the infill shall be permitted to model infilled frames. Because of the complexity of the structural system caused by the frame–infill interaction, finite element models shall be validated by considering published or project-specific experimental data from cyclic quasistatic or dynamic tests. Alternatively, the methods of Sections 11.4.2.1 and 11.4.2.2 shall be used.

C11.4.2 Masonry Infill In-Plane Actions Finite element modeling schemes and calibration procedures have been proposed by Atkinson et al. (1989), Chiou et al. (1999), Al Chaar (2002), Al Chaar et al. (2003), Stavridis (2009), and Stavridis and Shing (2010), among others. Design professionals should note that the results of such models can be significantly affected by the selected strut locations, widths, and orientations. Therefore, a

number of different configurations should be considered to ensure the objectivity of the model. A good practice is to adjust the properties of the equivalent struts so that the models can capture the likely range of the combined structural behavior of the infill and the bounding frame.

11.4.2.1 Stiffness—Masonry Infill In-Plane Actions The initial in-plane stiffness of an uncracked infilled frame with a solid unreinforced masonry infill panel shall be estimated using Eq. (11-14), assuming the structure is a composite cantilever column, with the columns being the flanges and the masonry wall the web of the column.

$$K_{ini}^{solid} = \frac{1}{\frac{1}{K_{fl}} + \frac{1}{K_{shl}}} \tag{11-14}$$

where K_{fl} = the flexural stiffness of the equivalent composite cantilever column; and
K_{shl} = the shear stiffness of the equivalent composite cantilever column.

For the flexural stiffness, K_{fl}, the equivalent properties of the composite column shall be considered, although for the shear stiffness only the contribution of the wall can be considered. The flexural stiffness shall be calculated from Eq. (11-15):

$$K_{fl} = \frac{3E_c I_{ce}}{h_{cb}^3} \tag{11-15}$$

where h_{cb} = the height of the composite column;
E_c = the modulus of elasticity of concrete; and
I_{ce} = the equivalent moment of inertia of the transformed concrete section.

The cracked moment of inertia, I_{ce}, depends on the ratio of elastic moduli of concrete or steel and masonry and the geometry of the cross section. Alternatively, the modulus of elasticity of masonry can be used in Eq. (11-15) if the composite cross section is transformed to an equivalent masonry cross section. Assuming that the shear stress is uniform across the wall, the shear stiffness shall be calculated from Eq. (11-16):

$$K_{sh} = \frac{A_w G_m}{h_w} \tag{11-16}$$

where A_w = area of infill wall;
G_m = shear modulus of masonry; and
h_w = height of infill wall.

The shear modulus of masonry shall be measured or calculated from Eq. (11-17):

$$G_m = 0.4E_m \tag{11-17}$$

where E_m = modulus of elasticity of masonry wall obtained according to Section 11.2.3.4.

Only the wythes in full contact with the frame elements shall be considered when computing the in-plane stiffness, unless anchorage capable of transmitting in-plane forces from frame members to all masonry wythes is provided on all sides of the walls.

C11.4.2.1 Stiffness—Masonry Infill In-Plane Actions In-plane lateral stiffness of an infilled frame system is not the same as the sum of the frame and infill stiffnesses because of the interaction of the infill with the surrounding frame. Experiments have shown that, under seismic forces, the frame tends to separate from the infill at small lateral deformations. This separation causes the reduction of the lateral stiffness, which onsets the nonlinear behavior of the structure at point 1 of Fig 11-1. The strength at this point has been noted to be up to 60% of the peak seismic force.

The infill panel is often considered to act as a diagonal compression strut. The location and orientation of the strut cannot be clearly defined, and different geometries have been proposed with struts along the diagonal of the frame located concentrically (Fig. C11-6), eccentrically (Fig. C11-7), at an angle of 45 degrees (Fig.C11-8), or with a combination of struts to account for openings (Fig. C11-9) in perforated infills. Because theoretical work and experimental data for determining multiple strut placement and strut properties are not sufficient to establish reliable guidelines for all possible infill configurations, the selection of the strut locations, widths, and orientations requires judgment on a case-by-case basis. The design professional should be aware that if analytical models with frame elements are constructed to

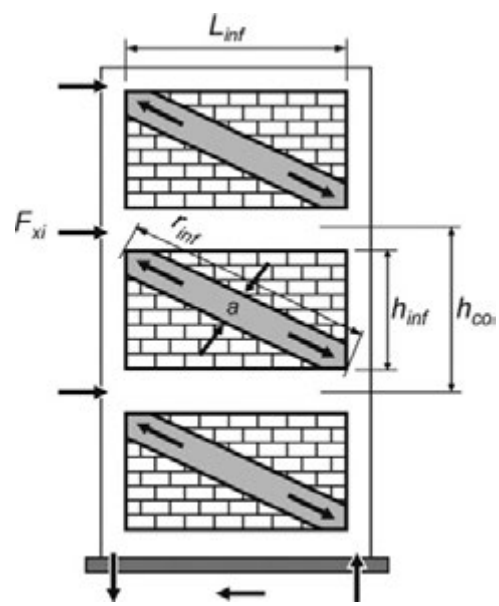

FIG. C11-6. Compression Strut Analogy—Concentric Struts

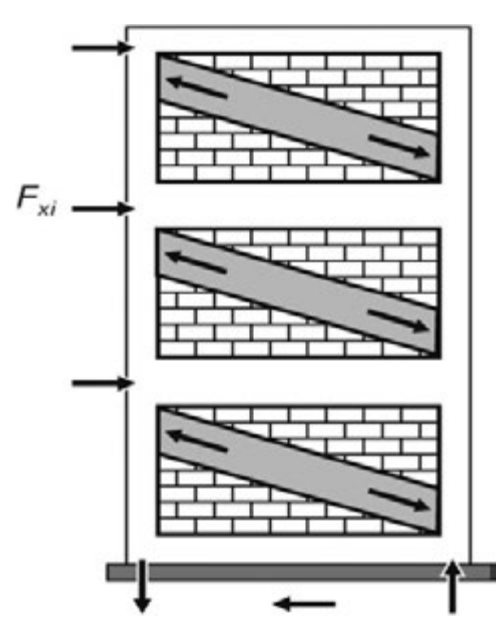

FIG. C11-7. Compression Strut Analogy—Eccentric Struts

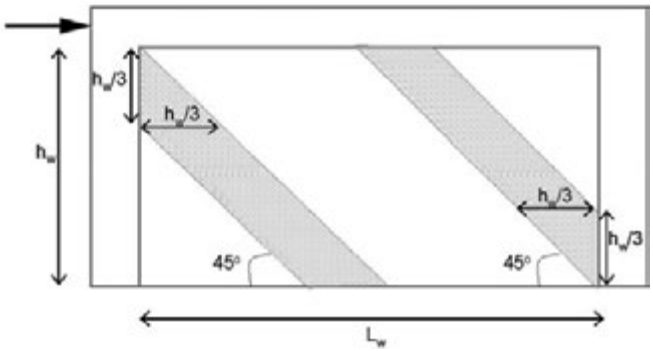

FIG. C11-8. Compression Strut Analogy—Struts at 45 Degrees Acting at the Top of the Left (Windward) Column and the Bottom of the Right (Leeward) Column
Source: Stavridis (2009); reproduced with permission

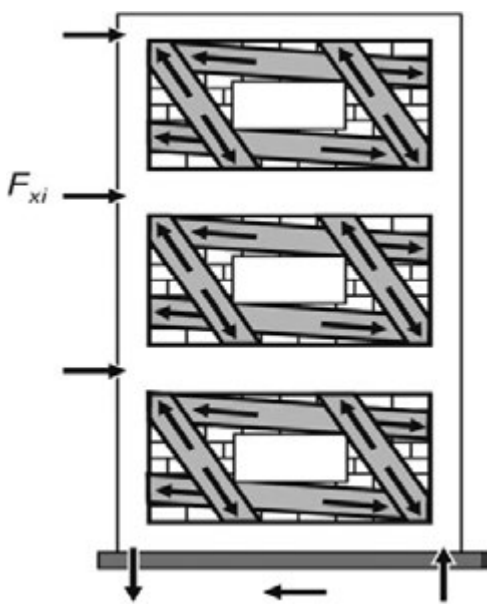

FIG. C11-9. Compression Strut Analogy—Perforated Infills

simulate the behavior of infilled frames under seismic forces, the results can be significantly affected by the selected strut locations.

11.4.2.2 Stiffness—Masonry Infill with Openings In-Plane Actions The initial in-plane stiffness of an uncracked infilled frame with an unreinforced masonry infill panel shall be estimated, based on the stiffness of the frame with a solid panel $K_{\text{ini}}^{\text{solid}}$ obtained from Eq. (11-14) using Eq. (11-18).

$$K_{\text{ini}} = \left(1 - 2\frac{A_{\text{op}}}{A_{W\text{tot}}}\right) K_{\text{ini}}^{\text{solid}} \tag{11-18}$$

where A_{op} = opening area; and
$A_{W\text{tot}}$ = total infill area.

C11.4.2.2 Stiffness—Masonry Infill with Openings In-Plane Actions Experiments have shown that, under seismic forces, two sets of cracks develop at small lateral deformations and initiate the nonlinear behavior. The first set of cracks is along the frame–infill boundary, and the second set consists of cracks that initiate at the corners of openings and radiate in the infill at an angle close to 45 degrees. The stress field is clearly affected because of the existence of the openings; however, the exact mechanism is still unknown. A possible representation of these stress fields with multiple compression struts, as shown in Fig. C11-9, have been proposed by Hamburger (1993). Theoretical work and experimental data for determining multiple strut placement and strut properties, however, are not sufficient to establish reliable guidelines.

11.4.2.3 Strength—Infill Wall In-Plane Actions The transfer of story shear across a masonry infill panel confined within a concrete or steel frame is permitted to be considered a deformation-controlled action if the deformation parameter d is at least twice the deformation parameter g, based on comparable experimental data from cyclic quasistatic or dynamic tests. Expected in-plane panel shear strength shall be determined in accordance with the requirements of this section.

For solid infill panels, the expected infill shear strength, V_{ine}, shall be calculated in accordance with Eq. (11-19):

$$Q_{CE} = V_{\text{ine}} = A_{ni} f_{vie} \tag{11-19}$$

where A_{ni} = area of net mortared and/or grouted section across infill panel; and
f_{vie} = expected shear strength of masonry infill bed joints.

Expected shear strength of existing infills, f_{vie}, shall not exceed the expected masonry bed-joint shear strength, v_{me}, as determined in accordance with Section 11.2.3.6.1 or 11.2.3.6.2.

Shear strength of new infill panels, f_{vie}, shall not exceed values specified in an approved building code for zero vertical compressive stress.

The diagonal compressive force in the infill shall not exceed the compressive strength of the infilled panel.

Only the wythes (leaves) in full contact with the frame elements shall be considered where computing in-plane strength, unless positive anchorage capable of transmitting in-plane forces from frame members to all masonry wythes (leaves) is provided on all sides of the walls.

C11.4.2.3 Strength—Infill Wall In-Plane Actions The strength of the masonry strut can be estimated in accordance with the procedure described in Section B3.4.3 of TMS 402.

The compressive force in the infill can be estimated assuming the development of one diagonal strut for aspect ratios smaller than 1.5 and two diagonal struts for larger aspect ratios. In the latter case, the force is distributed between the diagonal struts along 45-degree angles that initiate near the top of the windward column and the bottom of the leeward column.

The bearing height of the strut on the columns and beams can be assumed to be one third of its height.

The bearing (compressive) strength of the infill is obtained from Eq. (C11-3):

$$F_{mc} = f'_m \left(\frac{h}{3}\right) t_w \tag{C11-3}$$

where f'_m = compressive strength of the masonry;
h = height of infill wall; and
t_w = thickness of infill wall.

The bearing strength of the infill can be considered as a cap for the force the infill can carry and shall be compared with the diagonal force carried by each strut. If the force is lower than the strength, the infill can transfer the estimated force. If the force is higher, the lateral resistance should be accordingly adjusted downward.

11.4.2.4 Acceptance Criteria for Infill Wall In-Plane Actions The acceptance criteria for linear and nonlinear procedures shall be in accordance with this section.

C11.4.2.4 Acceptance Criteria for Infill Wall In-Plane Actions The Immediate Occupancy Structural Performance Level is assumed to be reached when significant visual cracking of an unreinforced masonry infill occurs. The Life Safety Structural Performance Level is assumed to be reached when substantial cracking of the masonry infill occurs. Collapse Prevention is assumed to be reached when the potential is high for the panel, or some portion of it, to drop out of the frame.

Failures in beams of infilled frames are not commonly observed because the beams are often protected by the confining effect caused by the in-plane stiffness of the upper-story masonry wall.

The residual strength, c, of infilled frames cannot be reliably estimated because of the brittle failure of infill systems. The in-plane cracks developing at drift ratio, d, can weaken the infill, increasing the potential for collapse because of the out-of-plane seismic forces. Hence, the residual strength should not be relied upon, and drift ratios d and e can be considered equal.

11.4.2.4.1 Required Strength of Column Members Adjacent to Infill Panels To demonstrate compliance, the expected flexural and shear strengths of column members adjacent to an infill panel shall exceed the forces resulting from one of the following conditions:

1. The application of the horizontal component of the expected infill strut force at the column using the shear strength of the column with zero axial load in accordance with Chapter 10 for concrete columns and Chapter 9 for steel columns; or
2. The shear force resulting from development of expected column flexural strengths at the top and bottom of a column. In this case, a reduced column height, l_{ceff}, equal to the distance between the flexural hinges, shall be considered.

The reduced column length, l_{ceff}, shall be equal to the clear height of openings in infilled walls for a column supported by a partial height infill.

The requirements of this section shall be waived if the lower-bound masonry shear strength, v_{mL}, as measured in accordance with test procedures of Section 11.2.3.6, is less than 20 lb/in.^{2}.

In addition, the strength of reinforced concrete beam–column joints shall be determined to exceed the expected infill diagonal tension forces acting on the joints, considering the reinforcement, development, degree of confinement, and load paths of the joints. Similarly, the strength of steel beam–column joints shall be determined to exceed the expected infill diagonal tension forces, considering the load paths through the joints.

11.4.2.4.2 Acceptance Criteria for Linear Procedures for Infill Wall In-Plane Actions Actions on masonry infills are permitted to be considered deformation controlled. For the linear procedures of Sections 7.4.1 and 7.4.2, component actions shall be compared with capacities in accordance with Section 7.5.2.2. m-Factors for use in Eq. (7-36) shall be as specified in Table 11-8. For an infill panel, the seismic force action, Q_E, shall be the horizontal component of the unreduced axial force in the equivalent strut member.

For determination of m-factors in accordance with Table 11-8, the ratio of frame to infill strengths, β, shall be determined considering the expected lateral strength of each component. V_{fre} is the expected story shear strength of the bare frame taken as the shear capacity of the column.

11.4.2.4.3 Acceptance Criteria for Nonlinear Procedures for Infill Wall In-Plane Actions For the NSP given in Section 7.4.3, infill panels shall meet the requirements of Section 7.5.3.2. Nonlinear lateral drifts shall not exceed the values given in Table 11-9. The variable d, representing nonlinear deformation capacities, shall be expressed in terms of story drift ratio in percent, as defined in Fig. 11-1.

For determination of acceptable drift levels using Table 11-9, the ratio of frame to infill strengths, β, shall be determined considering the expected lateral strength of each component.

For the NDP given in Section 7.4.4, infill panels shall meet the requirements of Section 7.5.3.2. Nonlinear force–deflection relations for infill panels shall be established based on the information given in Table 11-9 or on an approved procedure based on a comprehensive evaluation of the hysteretic characteristics of those components.

11.4.3 Masonry Infill Wall Out-of-Plane Actions Unreinforced infill panels with $h_{\text{inf}}/t_{\text{inf}}$ ratios less than those given in Table 11-10, and meeting the requirements for arching action

Table 11-8. Linear Procedure—*m*-Factors for Masonry Infill Panels[a]

$\beta = \frac{V_{fre}}{V_{ine}}$	$\frac{L_{inf}}{h_{inf}}$	*m*-Factors IO	LS	CP
β < 0.7	0.5	1.0	4.0	NA
	1.0	1.0	3.5	NA
	2.0	1.0	3.0	NA
0.7 ≤ β < 1.3	0.5	1.5	6.0	NA
	1.0	1.2	5.2	NA
	2.0	1.0	4.5	NA
β ≥ 1.3	0.5	1.5	8.0	NA
	1.0	1.2	7.0	NA
	2.0	1.0	6.0	NA

[a]Interpolation shall be used between table values. In this table, NA means not available.

Table 11-9. Nonlinear Procedure—Simplified Force–Deflection Relations for Masonry Infill Panels[a]

$\beta = \frac{V_{fre}}{V_{ine}}$	$\frac{L_{inf}}{h_{inf}}$	Residual Strength Ratio *c*	*d* (%)	*e*[b] (%)	Acceptance Criteria LS (%)	CP (%)
β < 0.7	0.5	NA	0.5	NA	0.4	NA
	1.0	NA	0.4	NA	0.3	NA
	2.0	NA	0.3	NA	0.2	NA
0.7 ≤ β < 1.3	0.5	NA	1.0	NA	0.8	NA
	1.0	NA	0.8	NA	0.6	NA
	2.0	NA	0.6	NA	0.4	NA
β ≥ 1.3	0.5	NA	1.5	NA	1.1	NA
	1.0	NA	1.2	NA	0.9	NA
	2.0	NA	0.9	NA	0.7	NA

[a]Interpolation shall be used between table values. In this table, NA means not available.
[b]Drift ratio e is permitted to be equal to d.

Table 11-10. Maximum $h_{\text{inf}}/t_{\text{inf}}$ Ratios

Performance Level	Very Low and Low Seismicity	Moderate Seismicity	High Seismicity
IO	14	13	8
LS	15	14	9
CP	16	15	10

given in the following section, need not be analyzed for out-of-plane seismic forces.

11.4.3.1 Stiffness—Infill Wall Out-of-Plane Actions Infill panels shall be considered local elements spanning out-of-plane vertically between floor levels or horizontally across bays of frames.

The out-of-plane stiffness of infill panels shall be neglected in analytical models of the global structural system in the orthogonal direction.

Flexural stiffness for uncracked masonry infills subjected to transverse forces shall be based on the minimum net sections of mortared and grouted masonry. Flexural stiffness for unreinforced, cracked infills subjected to transverse forces shall be assumed to be equal to zero unless arching action is considered.

Arching action shall be considered only if all of the following conditions exist.

1. The panel is in full contact with the surrounding frame components;
2. The product of the elastic modulus of the frame material, E_{fe}, times the moment of inertia, I_f, of the most flexible frame component exceeds a value of 3.6×10^9 lb*in.^{2};
3. The frame components have sufficient strength to resist thrusts from arching of an infill panel; and
4. The $h_{\text{inf}}/t_{\text{inf}}$ ratio is less than or equal to 25.

If arching action is considered, mid-height deflection normal to the plane of an infill panel, Δ_{inf}, divided by the infill height, h_{inf}, shall be determined in accordance with Eq. (11-20):

$$\frac{\Delta_{\text{inf}}}{h_{\text{inf}}} = \frac{0.002\left(\dfrac{h_{\text{inf}}}{t_{\text{inf}}}\right)}{1+\sqrt{1-0.002\left(\dfrac{h_{\text{inf}}}{t_{\text{inf}}}\right)^2}} \tag{11-20}$$

For infill panels not meeting the requirements for arching action, deflections shall be determined in accordance with the procedures given in Sections 11.3.3 or 11.3.5.

11.4.3.2 Strength—Infill Wall Out-of-Plane Actions Where arching action is not considered, the lower-bound strength of a URM infill panel shall be limited by the lower-bound masonry flexural tension strength, f_t', which shall be taken as 0.7 times the expected tensile strength, f_{te}, as determined in accordance with Section 11.2.3.5.

If arching action is considered, the lower-bound out-of-plane strength of an infill panel in lb/ft^2, q_{in}, shall be determined using Eq. (11-21):

$$Q_{CL} = q_{in} = \frac{0.7 f_m' \lambda_2}{\left(\dfrac{h_{\text{inf}}}{t_{\text{inf}}}\right)} \times 144 \tag{11-21}$$

where f_m' = lower-bound of masonry compressive strength determined in accordance with Section 11.2.3.3; and
λ_2 = slenderness parameter as defined in Table 11-11.

Table 11-11. Values of λ_2 for Use in Eq. (11-21)

$h_{\text{inf}}/t_{\text{inf}}$	5	10	15	25
λ_2	0.129	0.060	0.034	0.013

Note: Interpolation shall be used.

11.4.3.3 Acceptance Criteria—Infill Wall Out-of-Plane Actions Infill panels loaded out-of-plane shall not be analyzed with the LSP or NSP prescribed in Chapter 7.

The lower-bound transverse strength of URM infill panels shall exceed normal pressures as prescribed in Section 7.2.11.

If the NDP is used, the following performance criteria shall be based on the maximum out-of-plane deflection normal to the plane of the wall:

1. For the Immediate Occupancy Structural Performance Level, the out-of-plane story drift ratio of a panel shall be equal to or less than 2%;
2. For the Life Safety Structural Performance Level, the out-of-plane story drift ratio of a panel shall be equal to or less than 3%; and
3. For the Collapse Prevention Structural Performance Level, the out-of-plane story drift ratio of a panel shall be equal to or less than 5%.

If the surrounding frame is shown to remain stable following the loss of an infill panel, infill panels shall not be subject to limits for the Collapse Prevention Structural Performance Level.

C11.4.3.3 Acceptance Criteria—Infill Wall Out-of-Plane Actions The Immediate Occupancy Structural Performance Level is assumed to be reached when significant visual cracking of an unreinforced masonry infill occurs. The Collapse Prevention Structural Performance Level is assumed to be reached when substantial damage of the URM infill occurs and the potential is high for the panel, or some portion of it, to drop out of the frame.

11.5 ANCHORAGE TO MASONRY WALLS

11.5.1 Types of Anchors Anchors considered in Section 11.5.2 shall include plate anchors, headed anchor bolts, bent bar anchor bolts, and approved adhesive anchors embedded into clay-unit and concrete masonry. Anchors in hollow-unit masonry shall be embedded in grout or shall be embedded in approved adhesives within approved anchoring devices.

Pullout and shear strength of expansion anchors and adhesive anchors shall be verified by approved test procedures.

11.5.2 Analysis of Anchors Anchors embedded into existing or new masonry walls shall be considered force-controlled components. Lower-bound values for strengths of embedded anchors with respect to pullout, shear, and combinations of pullout and shear shall be as specified in an approved building code using load and resistance factor design (LRFD) design procedures taking $\phi = 1.0$.

The minimum effective embedment length or edge distance for considerations of pullout and shear strength of embedded anchors shall be used. Shear strength of anchors with edge distances equal to or less than 1 in. shall be taken as zero.

Anchors in masonry shall be analyzed as a force-controlled action in accordance with applicable sections of Chapter 7, Chapter 13, and TMS 402.

C11.5.2 Analysis of Anchors Commentary on the analysis and design of anchors is also provided in FEMA P-750 (2009c).

11.5.3 Quality Assurance for Anchors in Masonry Walls When required by the authority having jurisdiction, the design professional shall provide a quality assurance plan for new and existing anchors that are part of the seismic-force-resisting system and that provide connections to masonry walls. The plan shall include the following:

1. In unreinforced masonry walls, tests to determine lower-bound bed-joint shear strengths adjacent to anchor locations per Section 11.2.3.6.3 or 11.2.3.6.4 to comply with minimum bed-joint shear strengths specified in the plan;
2. In reinforced grouted masonry walls, tests to determine lower-bound reinforced masonry strengths, per Section 11.3.4.2;
3. In grouted masonry walls, borescopic investigations to determine the presence, absence, and quality of grout in reinforced masonry, hollow-unit walls, or cavity walls at and adjacent to anchor locations;
4. In URM walls, proof load of at least 25% of each type and diameter of existing anchors in confined tension to a load corresponding to the design allowable load in accordance with AC-60 of the International Code Council Evaluation Service (2011a), *International Existing Building Code*, Appendix Chapter A1 (2012b), or equivalent;
5. In grouted masonry walls, proof load of at least 10% of installed new anchors in confined tension in accordance with ASTM E488 to at least twice the lower-bound tension load, accounting for edge distances or 80% of the yield strength of the anchor, whichever is less;
6. Quality control provisions and documentation for the installation of new anchors and the condition of adjacent mortar joint and masonry units;
7. Visual inspection and documentation of the condition of existing anchors, adjacent mortar joints, and masonry units;
8. Special inspections for adhesive anchors by qualified special inspectors; and
9. For proprietary anchors, provisions for the verification of the qualifications of the installers of anchors for the specific types of anchors and masonry materials based on experience and training, as specified by the anchor manufacturer.

The plan shall be consistent with strengths; numbers of tests; procedures for tests; quality control; and, where applicable, inspection requirements specified by manufacturers' published installation instructions, acceptance criteria established by an independent evaluation services agency for proprietary anchors, or that specified by the design professional for generic anchors and existing anchors. The plan shall also include provisions for increasing the percentage of anchors to be tested to address conditions where failures are reported during initial tension and shear testing. The plan is permitted to include exemptions for tension and shear tests for anchors that extend through the entire wall thickness and bear on plates on the opposite wall face.

C11.5.3 Quality Assurance for Anchors in Masonry Walls Poor quality in anchors and the existing masonry and mortar joints adjacent to anchors has been observed to be a significant contributing factor to catastrophic collapses of URM and RM buildings in past earthquakes. Strict compliance with manufacturers' published installation instructions for proprietary anchors, specifications for generic anchors, and independent quality control by qualified inspectors are effective means of ensuring reliable performance of anchors.

Inspections for newly installed anchors should include verifying the locations of the anchors, any edge distance and spacing requirements, drill bit size type and size, hole depth, hole cleaning technique, anchor type, size, embedment, and compliance with manufacturers' published installation procedures, including adhesive expiration date and dispensing, where applicable.

The quality assurance plan, testing procedures, and limits on the types of anchor installations should be developed considering that masonry walls are likely to be cracked before or during earthquakes and degrade, thus potentially compromising the integrity of load paths between the anchors and the walls.

Judgment should be exercised in the use of lower-bound material properties for anchors. Not all manufacturers of postinstalled anchors publish information on the mean and the standard deviation of the ultimate anchor capacity. Older testing for existing postinstalled anchors is often reported at allowable stress design levels and may not be consistent with this standard. It is recommended that care and judgment be used to estimate pullout and shear strengths for anchors, particularly for those that are critical to satisfying the target performance level.

Guidance for developing quality assurance plans can be found in AC-58 *Acceptance Criteria for Adhesive Anchors in Masonry Elements* (ICC-ES 2011c), AC-60 *Acceptance Criteria for Anchors in Unreinforced Masonry Elements* (ICC-ES 2011d), AC-10 *Acceptance Criteria for Quality Documentation* (ICC-ES 2011b), ACI 355.2 *Qualification of Post-Installed Mechanical Anchors in Concrete*, ACI 355.4 *Qualification of Post-Installed Adhesive Anchors in Concrete*, ACI 318 *Building Code Requirements for Structural Concrete*, AC-308 *Acceptance Criteria for Post-Installed Adhesive Anchors in Concrete Elements* (ICC-ES 2011e), AC-193 *Acceptance Criteria for Mechanical Anchors in Concrete Elements* (ICC-ES 2011d), *Special Inspection Guidelines for Expansion and Adhesive Anchors* (CAMA 2011), *Adhesive Anchor Installer Certification Program* (ACI/CRSI 2011), and *International Existing Building Code*, Appendix Chapter A1.

11.6 MASONRY FOUNDATION ELEMENTS

11.6.1 Types of Masonry Foundations Masonry foundations of all types shall be evaluated or retrofitted in accordance with this section.

C11.6.1 Types of Masonry Foundations Masonry foundations are common in older buildings and are still used for some modern construction. Such foundations may include footings and foundation walls constructed of stone, clay brick, or concrete block. Generally, masonry footings are unreinforced; foundation walls may or may not be reinforced.

Spread footings transmit vertical column and wall loads to the soil by direct bearing. Seismic forces are transferred through friction between the soil and the masonry, as well as by passive pressure of the soil acting on the vertical face of the footing.

11.6.2 Analysis of Existing Foundations The deformability of the masonry footings and the flexibility of the soil under them shall be considered in the seismic force analysis of the building system. The strength and stiffness of the soil shall be determined in accordance with the requirements of Section 8.4.

Masonry footings shall be considered force-controlled components. Masonry footings shall be modeled as elastic components with no inelastic deformation capacity, unless verification tests are done in accordance with Section 7.6 to prove otherwise.

Masonry retaining walls shall be evaluated to resist static and seismic soil pressures in accordance with Section 8.5. Stiffness, strength, and acceptability criteria for masonry retaining walls shall be the same as those for other masonry walls subjected to out-of-plane loadings, as specified in Sections 11.3.3 and 11.3.5.

11.6.3 Foundation Retrofit Measures Seismic retrofit measures for masonry foundations shall meet the requirements of Section 10.12.4 or another approved method. New elements shall be designed in accordance with this standard and detailed

and constructed in accordance with a building code approved by the authority having jurisdiction.

C11.6.3 Foundation Retrofit Measures Possible retrofit methods include the following:

1. Injection grouting of stone foundations;
2. Reinforcing of URM foundations;
3. Prestressing of masonry foundations;
4. Enlargement of footings by placement of reinforced shotcrete; and
5. Enlargement of footings with additional reinforced concrete sections.

Procedures for retrofit should follow provisions for enhancement of masonry walls where applicable, according to Section 11.3.1.3.

CHAPTER 12
WOOD AND COLD-FORMED STEEL LIGHT FRAME

12.1 SCOPE

This chapter sets forth requirements for the seismic evaluation and retrofit of wood and cold-formed steel (CFS) light-frame components of an existing building. The requirements of this chapter shall apply to existing wood and CFS light-frame components of a building system, retrofitted wood and CFS light-frame components of a building system, and new wood and CFS light-frame components that are added to an existing building system.

Section 12.2 specifies data collection procedures for obtaining material properties and performing condition assessments. Section 12.3 specifies general assumptions and requirements. Sections 12.4 and 12.5 provide modeling procedures, component strengths, acceptance criteria, and retrofit measures for wood and CFS light-frame shear walls and wood diaphragms, respectively. Section 12.6 specifies requirements for wood foundations. Section 12.7 specifies requirements for other wood components, including but not limited to knee-braced frames, rod-braced frames, and braced horizontal diaphragms.

C12.1 SCOPE

The linear static procedure (LSP) presented in Chapter 7 is most often used for the analysis of wood and CFS light-frame buildings; however, properties of the idealized inelastic performance of various components and connections are included so that nonlinear procedures can be used if desired.

The evaluation and assessment of various structural components of wood and CFS light-frame buildings is found in Section 12.2. For a description and discussion of connections between the various components and elements, see Section 12.2.2.2.2. Properties of shear walls are described in Section 12.4, along with various retrofit or strengthening methods. Horizontal floor and roof diaphragms are discussed in Section 12.5, which also covers engineering properties and methods of upgrading or strengthening the elements. Wood foundations and pole structures are addressed in Section 12.6. For additional information regarding foundations, see Chapter 8.

As indicated in Chapter 1, great care should be exercised in selecting the appropriate retrofit approaches and techniques for application to historic buildings to preserve their unique characteristics.

12.2 MATERIAL PROPERTIES AND CONDITION ASSESSMENT

12.2.1 General Mechanical properties for wood and CFS light-frame materials, components, and assemblies shall be based on available construction documents, test reports, manufacturers' data, and as-built conditions for the particular structure. Where such information fails to provide adequate information to quantify material properties, capacities of assemblies, or condition of the structure, such information shall be supplemented by materials tests, mock-up tests of assemblies, and assessments of existing conditions as required in Section 6.2.

Material properties of existing wood and CFS light-frame components and assemblies shall be determined in accordance with Section 12.2.2. A condition assessment shall be conducted in accordance with Section 12.2.3. The extent of materials testing and condition assessment performed shall be used to determine the knowledge factor, κ, as specified in Section 12.2.4.

C12.2.1 General Various grades and species of wood have been used in a cut dimension form, combined with other structural materials (e.g., steel and wood components), or in multiple layers of construction (e.g., glue-laminated wood components). Wood materials have also been manufactured into hardboard, plywood, and particleboard products, which may have structural or nonstructural functions in construction. The condition of the in-place wood materials greatly influences the future behavior of wood components in the building system.

Quantification of in-place material properties and verification of existing system configuration and condition are necessary to properly analyze the building. The focus of this effort shall be given to the primary components of vertical- and seismic-force-resisting systems. These primary components may be identified through initial analysis and application of loads to the building model.

The extent of in-place materials testing and condition assessment that must be accomplished is related to availability and accuracy of construction documents and as-built records, the quality of materials used and construction performed, and physical condition. A specific difficulty with wood construction is that structural wood components are often covered with other components, materials, or finishes; in addition, their behavior is influenced by past loading history. Knowledge of the properties and grades of material used in original component or connection fabrication is invaluable and may be effectively used to reduce the amount of in-place testing required. The design professional is encouraged to research and acquire all available records from the original construction, including design calculations.

Connection configuration also has a very important influence on response to applied loads and motions. A large number of connector types exist; the most prevalent are nails and through bolts. However, more recent construction has included metal straps and hangers, clip angles, and truss plates. An understanding of connector configuration and mechanical properties must be gained to properly analyze the anticipated performance of the building.

Wood construction has evolved over the years; wood is a common building material for residential and small commercial

structures in the United States. It has often been used for the framing of roofs and floors and in combination with other materials. Establishing the age and recognizing the location of a building can be helpful in determining what types of seismic-force-resisting systems may be present.

Based on the approximate age of a building, various assumptions can be made about the design and features of construction. Older wood frame structures that predate building codes and standards usually do not have the types of elements considered essential for predictable seismic performance. In these conditions, new elements generally have to be added, or the existing elements have to be upgraded to obtain predictable performance.

If the age of a building is known, the code in effect at the time of construction and the general quality of the construction usual for the time can be helpful in evaluating an existing building. The level of maintenance of a building may be a useful guide in determining the structure's capacity to resist loads.

Users should be aware that wood material strengths presented in historical information are typically in allowable stress format. Users should convert wood allowable stress values to expected strength values in accordance with ASTM D5457.

The earliest wood frame buildings in the United States were built with post and beam or frame construction adopted from Europe and the British Isles. This method was followed by the development of balloon framing in about 1830 in the Midwest, which spread to the East Coast by the 1860s. This method, in turn, was followed by the development of western or platform framing shortly after the turn of the century. Platform framing is the system currently in use for multistory construction.

Drywall or wallboard was first introduced in about 1920; however, its use was not widespread until after World War II, when gypsum lath (button board) also came into extensive use as a replacement for wood lath.

With the exception of public schools in high seismic areas, modern wood frame structures detailed to resist seismic loads were generally not built before 1934. For most wood frame structures, either general seismic provisions were not provided or the codes that included them were not enforced until the mid-1950s or later, even in the most active seismic areas. This time frame varies somewhat, depending on local conditions and practice.

The design of buildings constructed after 1970 in high seismic areas usually included a well defined seismic-force-resisting system. However, site inspections and code enforcement varied greatly. Thus, the inclusion of various features and details on the plans does not necessarily mean that they are in place or fully effective. Verification is needed to ensure that good construction practices were followed.

Until about 1950, wood residential buildings were frequently constructed on raised foundations and in some cases included a short stud wall, called a "cripple wall," between the foundation and the first floor framing. Cripple wall conditions occurs on both balloon-framed and platform-framed buildings. There may be an extra demand on these cripple walls because most interior partition walls do not continue to the foundation. Special attention is required in these situations. Adequate bracing must be provided for cripple walls and the attachment of the sill plate to the foundation.

In more recent times, CFS light-frame studs, joists, and trusses have become popular. Seismic-force resistance is either provided by diagonal strap bracing attached to the studs and top and bottom tracks or by structural panels attached with sheet metal screws to the studs and the top and bottom track in a manner similar to that of wood construction. The CFS light-frame studs and joists vary in size, thickness, and configuration, depending on the manufacturer and the loading conditions.

For systems that use structural panels for bracing, see Section 12.4 for analysis and acceptance criteria. For the all-metal systems using diagonal strap bracing, see Chapter 9 for guidance.

12.2.2 Properties of In-Place Materials and Components

12.2.2.1 Material Properties

12.2.2.1.1 Wood Construction The species and grade of wood shall be established by one of the following methods:

1. Review of construction documents;
2. Inspection to identify grade by viewing grade stamps or comparing grading rules; or
3. Examination of samples by an experienced wood pathologist to establish the species.

Where materials testing is required by Section 6.2, grading shall be performed using the ASTM D245 grading methodology or an approved grading handbook for the assumed wood species and application. Samples shall be obtained in a manner that does not compromise the strength or stiffness of the structure. Samples shall be tested in accordance with Section 12.2.2.3.

12.2.2.1.2 Cold-Formed Steel Light-Frame Construction The material properties (i.e., base steel thickness and grade) of the in-place CFS light-frame components shall be established by one or more of the following methods:

1. Review of construction documents;
2. Inspection of manufacturers' product identification;
3. Examination of samples by an experienced metallurgist;
4. Measurements to establish base steel thickness; or
5. Materials testing to establish grade.

Base steel thickness shall exclude the thickness of any coatings (e.g., zinc or paint).

Where materials testing is required by Section 6.2 or this list, tests shall be conducted in accordance with ASTM A370. Samples shall be obtained in a manner that does not compromise the strength or stiffness of the structure. Samples shall be tested in accordance with Section 12.2.2.3.

C12.2.2.1.2 Cold-Formed Steel Light-Frame Construction Configuration (including base steel thickness) and grade (i.e., yield strength, tensile strength, and elongation) are the material properties that affect strength and stiffness of CFS light-frame members and connections. Coatings intended for corrosion protection, such as zinc or paint, do not contribute significantly to the structural behavior and should be excluded when determining material properties. Minimum design material properties should be documented on original construction documents and in many cases are identified on the installed components.

12.2.2.1.3 Use of Default Properties Use of default properties for wood and CFS light-frame shear walls, wood diaphragms, components, and connectors shall be permitted in accordance with Section 12.2.2.5. Use of material properties based on historical information for use as default values shall be as specified in Section 12.2.2.5. Other approved values of material properties shall be permitted if they are based on available historical information for a particular type of light-frame construction, prevailing codes, and assessment of existing condition. For wood construction materials comprising individual components, the use of default properties shall be permitted where the species and grade of wood have been determined. Use of default properties for connectors in wood construction shall be permitted

where the species and grade of the connected members have been determined.

12.2.2.1.4 Nominal or Specified Properties Use of nominal material properties or properties specified in construction documents to compute expected and lower-bound material properties shall be permitted in accordance with Section 12.2.2.5.

C12.2.2.1.4 Nominal or Specified Properties Actions associated with wood and CFS light-frame components generally are deformation controlled; thus, expected strength material properties are used most often. Lower-bound values are used with components supporting discontinuous shear walls, bodies of connections, and axial compression of individual timber frame components, which are force controlled. Material properties listed in this chapter are expected strength values. If lower-bound material properties are needed, they should be taken as mean minus one standard deviation values, or they can be adjusted from expected strength values in accordance with Section 12.2.2.5.

12.2.2.2 Component Properties

12.2.2.2.1 Elements The following component properties, as applicable, shall be determined in accordance with Section 12.2.3:

1. Cross-sectional shape and physical dimensions of the primary components and overall configuration of the structure, including any modifications subsequent to original construction;
2. Configuration of elements, size and thickness of connected materials, lumber grade, connection size and spacing, and continuity of load path;
3. Location and dimension of seismic-force-resisting elements, type, materials, and spacing of tie-downs and boundary components; and
4. Current physical condition of components and extent of any deterioration present.

C12.2.2.2.1 Elements Structural elements of the seismic-force-resisting system are composed of primary and secondary components, which collectively define element strength and resistance to deformation. Behavior of the components—including shear walls, beams, diaphragms, columns, and braces—is dictated by physical properties such as area; material grade; thickness, depth, and slenderness ratios; lateral-torsional buckling resistance; and connection details.

The actual physical dimensions should be measured; for example, in wood construction, the labeled 2-in. × 4-in. stud dimensions are generally 1½-in. × 3½-in. Connected members include plywood, bracing, stiffeners, chords, sills, struts, and tie-down posts. Modifications to members include notching, holes, splits, and cracks. The presence of decay or deformation should be noted.

These primary component properties are needed to properly characterize building performance in the seismic analysis. The starting point for establishing component properties should be the available construction documents. Preliminary review of these documents should be performed to identify vertical-load (gravity-load) and seismic-force-resisting elements and systems, and their critical components and connections. Site inspections should be conducted to verify conditions and to ensure that remodeling has not changed the original design concept. In the absence of a complete set of construction documents, the design professional must thoroughly inspect the building to identify these elements, systems, and components, as indicated in Section 12.2.3.

12.2.2.2.2 Connections The following connection details, as applicable, shall be determined or verified in accordance with Section 12.2.3:

1. Connections between horizontal diaphragms and vertical elements of the seismic-force-resisting system;
2. Size and character of all diaphragm ties, including splice connections;
3. Connections at splices in chord members of horizontal diaphragms;
4. Connections of floor and roof diaphragms to exterior or interior concrete or masonry walls for both in-plane and out-of-plane loads;
5. Connections of cross-tie members for concrete or masonry buildings;
6. Connections of shear walls to foundations for transfer of shear and overturning forces; and
7. Method of through-floor transfer of wall shear and overturning forces in multistory buildings.

C12.2.2.2.2 Connections The method of connecting the various components of the structural system is critical to its performance. The type and character of the connections must be determined by a review of the plans and a field verification of the conditions.

12.2.2.3 Test Methods to Quantify Material Properties The stiffness and strength of wood and CFS light-frame components and assemblies shall be established through in situ testing or mock-up testing of assemblies in accordance with Section 7.6, unless default values are used in accordance with Section 12.2.2.5. The number of tests required shall be based on Section 12.2.2.4. Expected material properties shall be based on mean values of tests. Lower-bound material properties shall be based on mean values of tests minus one standard deviation.

C12.2.2.3 Test Methods to Quantify Material Properties To obtain the desired in-place mechanical properties of materials and components, including expected strength, it is often necessary to use proven destructive and nondestructive testing methods.

Of greatest interest to wood building system performance are the expected orthotropic strengths of the installed materials for anticipated actions (e.g., flexure). Past research and accumulation of data by industry groups have led to published mechanical properties for most wood types and sizes (e.g., dimensional solid-sawn lumber and glue-laminated or "glulam" beams). Section 12.2.2.5 addresses these established default strengths and distortion properties. This information may be used, together with tests from recovered samples or observation, to establish the expected properties for use in component strength and deformation analyses. Where possible, the load history for the building shall be assessed for possible influence on component strength and deformation properties.

To quantify material properties and to analyze the performance of archaic wood construction, shear walls, and diaphragm action, more extensive sampling and testing may be necessary. This testing should include further evaluation of load history and moisture effects on properties and an examination of wall and diaphragm continuity and of the suitability of in-place connectors.

Where it is desired to use an existing assembly and little or no information about its performance is available, a cyclic load test of a mock-up of the existing structural elements can be used to determine the performance of various assemblies, connections, and load transfer conditions. See Section 7.6 for an

explanation of the backbone curve and the establishment of alternative modeling parameters.

12.2.2.4 Minimum Number of Tests Where required, testing shall meet the requirements for usual testing in Section 12.2.2.4.1 or comprehensive testing in Section 12.2.2.4.2.

C12.2.2.4 Minimum Number of Tests To quantify expected strength and other in-place properties accurately, a minimum number of tests must be conducted on representative components. The minimum number of tests is dictated by available data from original construction, the type of structural system used, desired accuracy, and quality or condition of in-place materials. Visual access to the structural system also influences testing program definition. As an alternative, the design professional may elect to use the default strength properties in accordance with Section 12.2.2.5. However, using default values without testing is only permitted with the linear analysis procedures. It is strongly encouraged that the expected strengths be derived through testing of assemblies to model behavior accurately.

Removal of coverings, including stucco, fireproofing, and partition materials, is generally required to facilitate sampling and observations.

Component types include solid-sawn lumber, glulam beam, and plywood diaphragm. Element types include those that are part of gravity- and seismic-force-resisting systems. The observations shall consist of each connector type present in the building (e.g., nails, bolts, and straps), such that the composite strength of the connection can be estimated.

12.2.2.4.1 Usual Testing The minimum number of tests to quantify expected strength material properties for usual data collection shall be based on the following criteria:

1. If construction documents containing material property and detailing information for the seismic-force-resisting system are available, at least one element of the seismic-force-resisting system for each story, or for every 100,000 ft^2 of floor area, is to be randomly verified by observation for compliance with the construction documents; and
2. If construction documents are incomplete or not available, at least two locations for each story, or 100,000 ft^2 of floor area, are to be randomly verified by observation or otherwise documented.

12.2.2.4.2 Comprehensive Testing The minimum number of tests necessary to quantify expected strength properties for comprehensive data collection shall be defined in accordance with the following requirements:

1. If original construction documents exist that define the grade and mechanical properties, at least one location for each story is to be randomly verified by observing product marking or by compliance with wood grading rules for each component type identified as having a different material grade;
2. If original construction documents defining properties are not complete or do not exist but the date of construction is known and single material use is confirmed, at least three locations are to be randomly verified—by sampling and testing or by observing grade stamps and conditions—for each component type, for every two floors in the building;
3. If no knowledge of the structural system and materials used exists, at least six locations are to be randomly verified—by sampling and testing or by observing product marking and conditions—for each element and component type, for every two floors or 200,000 ft^2 of floor area of construction. If it is determined from testing or observation that more than one material grade exists, additional observations and testing are to be conducted until the extent of use for each grade has been established;
4. In the absence of construction records defining connector features present, the configuration of at least three connectors are to be documented for every floor or 100,000 ft^2 of floor area in the building; and
5. A full-scale mock-up test is to be conducted for archaic assemblies; at least two cyclic tests of each assembly shall be conducted. A third test shall be conducted if the results of the two tests vary by more than 20%.

12.2.2.5 Default Properties Use of default properties to determine component strengths shall be permitted in conjunction with the linear analysis procedures of Chapter 7.

Default expected strength and stiffness values for existing wood and CFS light-frame shear wall assemblies shall be taken from Table 12-1. The shear wall type shall be as defined in Section 12.4.2 for wood construction and Section 12.4.3 for CFS light-frame construction. Default expected strength and stiffness values for wood diaphragm assemblies shall be taken from Table 12-2.

The estimated deformation of any hardware, including allowance for poor fit or oversized holes, shall be summed to obtain the total deformation of the connection.

Default expected strength values for connection hardware shall be taken as the average ultimate test values from published reports.

Table 12-1. Default Expected Strength Values for Wood and Cold-Formed Steel Light-Frame Shear Walls

Shear Wall Type[a]	Property: Shear Stiffness (G_d) (lb/in.)	Property: Expected Strength (Q_{CE}) (lb/ft)
Wood Construction Shear Walls		
Single-layer horizontal lumber sheathing or siding	2,000	80
Single-layer diagonal lumber sheathing	8,000	700
Double-layer diagonal lumber sheathing	18,000	1,300
Vertical wood siding	1,000	70
Wood siding over horizontal sheathing	4,000	500
Wood siding over diagonal sheathing	11,000	1,100
Wood structural panel sheathing[b]	—	—
Stucco on studs, sheathing, or fiberboard	14,000	350
Gypsum plaster on wood lath	8,000	400
Gypsum plaster on gypsum lath	10,000	80
Gypsum wallboard	8,000	100
Gypsum sheathing	8,000	100
Plaster on metal lath	12,000	150
Horizontal lumber sheathing with cut-in braces or diagonal blocking	2,000	80
Fiberboard or particleboard sheathing	6,000	100
CFS Light-Frame Shear Walls		
3-coat plaster on metal lath	12,000	150
Wood structural panel sheathing	—[c]	—[c]
Gypsum board sheathing	—[d]	—[d]

[a]As defined in Section 12.4.
[b]See Section 12.4.4.6 for shear stiffness and expected strength of wood structural panel walls.
[c]See Section 12.4.5.2 for expected strength of CFS wood structural panel shear walls.
[d]See Section 12.4.5.3.

Table 12-2. Default Expected Strength Values for Wood Diaphragms

Diaphragm Type[a]		Property: Shear Stiffness (G_d) (lb/in.)	Property: Expected Strength (Q_{CE}) (lb/in.)
Single Straight Sheathing[b]		2,000	120
Double Straight Sheathing	Chorded	15,000	600
	Unchorded	7,000	400
Single Diagonal Sheathing	Chorded	8,000	600
	Unchorded	4,000	420
Diagonal Sheathing with Straight Sheathing or Flooring Above	Chorded	18,000	900
	Unchorded	9,000	625
Double Diagonal Sheathing	Chorded	18,000	900
	Unchorded	9,000	625
Wood Structural Panel Sheathing[c]	Unblocked, Chorded	8,000	—
	Unblocked, Unchorded	4,000	—
Wood Structural Panel Overlays on:	Unblocked, Chorded	9,000	450
a. Straight or Diagonal Sheathing[d] or	Unblocked, Unchorded	5,000	300
b. Existing Wood Structural Panel Sheathing[e]	Blocked, Chorded	18,000	—
	Blocked, Unchorded	7,000	—

[a]As defined in Section 12.5.
[b]For single straight sheathing, expected strength shall be multiplied by 1.5 where built-up roofing is present. The value for stiffness shall not be changed.
[c]See Section 12.5.3.6 for shear stiffness and expected strength of wood structural panel diaphragms.
[d]See Section 12.5.3.7 for expected strength of wood structural panel overlays on straight or diagonal sheathing.
[e]See Section 12.5.3.8 for expected strength of wood structural panel overlays on existing wood structural panel sheathing.

Default lower-bound strength values, where required in this chapter, shall be taken as expected strength values multiplied by 0.85.

C12.2.2.5 Default Properties The results of any material testing performed should be compared with the default values for the particular era of building construction. If significantly reduced properties from testing are discovered, further evaluation should be undertaken.

Tables 12-1 and 12-2 contain default values for strength and stiffness of shear wall and diaphragm assemblies. The shear stiffness, G_d, for the assemblies should not be confused with the modulus of rigidity, G, for wood structural panels.

Actions associated with wood and CFS light-frame components generally are deformation controlled, and expected strength material properties are used most often. Lower-bound values are needed for actions that are force controlled. The 0.85 factor included in this standard to convert expected strength to lower-bound values is based on the results of shear wall testing. If more precise lower-bound material properties are desired, they should be taken as mean minus one standard deviation from test data for the components in question.

12.2.2.5.1 Wood Construction Default Properties Default expected strength values for wood materials comprising individual components shall be based on design resistance values associated with the American Wood Council (AWC) National Design Specification (NDS) for Wood Construction as determined in accordance with ASTM D5457. All adjustment factors, including the time-effect factor, that are applicable in accordance with AWC NDS shall be considered. The resistance factor, ϕ, shall be taken as 1.0. If components are damaged, reductions in capacity and stiffness shall be applied, considering the position and size of the ineffective cross section.

Default expected strength values for connectors shall be based on design resistance values associated with AWC NDS, as determined in accordance with ASTM D5457. All adjustment factors, including the time-effect factor, that are applicable in accordance with AWC NDS shall be considered. The resistance factor, ϕ, shall be taken as 1.0.

Alternatively, expected strength values shall be permitted to be directly computed from allowable stress values listed in an approved code using the method contained in ASTM D5457.

Default deformations at yield of connectors shall be taken as the following:

1. 0.03 in. for wood-to-wood and 0.02 in. for wood-to-metal nailed connections;
2. 0.04 in. for wood-to-wood and 0.03 in. for wood-to-steel screw connections;
3. 0.04 in. for wood-to-wood and 0.027 in. for wood-to-steel lag bolt connections; and
4. 0.045 in. for wood-to-wood and 0.03 in. for wood-to-steel bolted connections.

C12.2.2.5.1 Wood Construction Default Properties The load and resistance factor design (LRFD) methodology of AWC NDS is based on the concepts of limit state design, similar to the provisions for strength design in steel or concrete. LRFD resistance values are based on ASTM D5457, which provides methodologies for calculation directly from data or by format conversion from reference allowable stress values. Use of a format conversion (i.e., the LRFD equivalent of allowable stresses) for computing expected strengths of wood materials comprising individual wood components and for wood connectors (nails, screws, lags, bolts, split rings, and so forth) is permitted. This format conversion methodology is not applicable for adjustment of tabulated expected strength values for wood shear wall and diaphragm assemblies covered in Tables 12-1 and 12-2. For use with this chapter, capacities for shear wall and diaphragm assemblies are to be taken directly from the tables or as indicated by the table footnotes.

LRFD Manual for Engineered Wood Construction (AF&PA 1996) contains a guideline for calculating resistance values for connection hardware for which published report values are in allowable stress format. Where computing the expected strength of connections, all limit states, including that of the connection hardware, must be considered (e.g., in addition to the published strength of a tie-down device, the limit states for the stud bolts, the anchor bolts in the foundation, and so forth, should be considered).

The connector deformation at yield may be calculated by dividing the load by the load/slip modulus. The load/slip modulus for dowel type connections (bolts, lag screws, screws, and nails) is calculated as $(180)(D)^{1.5}$ kip/in. for wood-to-wood connections and $(270)(D)^{1.5}$ kip/in. for wood-to-steel side plate connections.

12.2.2.5.2 CFS Light-Frame Construction Default Properties Default expected strength values for connectors and CFS materials comprising individual components shall be based on design resistance values associated with AISI S100. The resistance factor, ϕ, shall be taken as 1.0. If components are damaged, reductions in capacity and stiffness shall be applied.

12.2.3 Condition Assessment

12.2.3.1 General A condition assessment of the existing building and site shall be performed as specified in this section.

A condition assessment shall include the following:

1. The physical condition of primary and secondary components is to be examined, and the presence of degradation is to be noted.
2. The presence and configuration of components and their connections, and the continuity of load paths among components, elements, and systems is to be verified or established.
3. Other conditions, including neighboring party walls and buildings, presence of nonstructural components, and prior remodeling are to be reviewed and documented.

C12.2.3.1 General The physical condition of existing components and elements and their connections must be examined for degradation. Degradation may include environmental effects (e.g., decay; splitting; fire damage; and biological, termite, corrosion, and chemical attack) or past or current loading effects (e.g., overload, damage from past earthquakes, buckling, crushing, and twisting). Natural wood also has inherent discontinuities, such as knots, checks, and splits, that must be noted. Configuration problems observed in recent earthquakes, including effects of discontinuous components; improper nailing, screwing, welding, or bolting; poor fit-up; and connection problems at the foundation level, should also be evaluated. Often, unfinished areas, such as attic spaces, basements, and crawl spaces, provide suitable access to structural components and can give a general indication of the condition of the rest of the structure. Invasive inspection of critical components and connections is typically required.

Connections require special consideration and evaluation. The load path for the system must be determined, and each connection in the load path(s) must be evaluated. This path includes diaphragm-to-component and component-to-component connections. The strength and deformation capacity of connections must be checked where the connection is attached to one or more components that are expected to experience significant inelastic response. Anchorage of exterior walls to roof and floors in concrete and masonry buildings, for which wood diaphragms are used for out-of-plane loading, requires detailed inspection. Bolt holes in relatively narrow straps sometimes preclude the ductile behavior of the steel strap. Twists and kinks in the strap can also have a serious effect on its anticipated behavior. Cross ties, which are part of the wall anchorage system, need to be inspected to confirm their presence, along with the connection of each piece, to ensure that a positive load path exists to tie the building walls together.

The condition assessment also affords an opportunity to review other conditions that may influence wood elements and systems and overall building performance. Of particular importance is the identification of other elements and components that may contribute to or impair the performance of the wood system in question, including infills, neighboring buildings, and equipment attachments. Limitations posed by existing coverings, wall and ceiling space insulation, and other material shall also be defined such that prudent retrofit measures can be planned.

12.2.3.2 Scope and Procedures for Condition Assessment Condition assessment shall meet the requirements for visual condition assessment in accordance with Section 12.2.3.2.1 or comprehensive condition assessment in accordance with Section 12.2.3.2.2. All primary structural components of the gravity- and seismic-force-resistance system shall be included in the condition assessment.

C12.2.3.2 Scope and Procedures for Condition Assessment Accessibility constraints may necessitate the use of instruments such as a fiberscope or video probe to reduce the amount of damage to covering materials and fabrics. The knowledge and insight gained from the condition assessment is invaluable to understanding load paths and the ability of components to resist and transfer loads. The degree of assessment performed also affects the knowledge factor, which is discussed in Section 12.2.4.

Direct visual inspection provides the most valuable information because it can be used to identify any configuration issues, it allows measurement of component dimensions, and it identifies the presence of degradation. The continuity of load paths may be established by viewing components and connection condition. From visual inspection, the need for other test methods to quantify the presence and degree of degradation may be established.

The scope of the removal effort is dictated by the component and element design. For example, in a braced frame, exposure of several key connections may suffice if the physical condition is acceptable and the configuration matches the construction documents. However, for shear walls and diaphragms, it may be necessary to expose more connection points because of varying designs and the critical nature of the connections. For encased walls and frames for which no construction documents exist, it is necessary to indirectly view or expose all primary end connections for verification.

The physical condition of components and connectors may also support the need to use certain destructive and nondestructive test methods. Devices normally used for the detection of reinforcing steel in concrete or masonry may be used to verify the diagonal braced straps and hardware located beneath finish surfaces.

12.2.3.2.1 Visual Condition Assessment The dimensions and features of all accessible components shall be measured and compared with available design information. Similarly, the configuration and condition of all accessible connections shall be visually verified, with any deformations or anomalies noted.

12.2.3.2.2 Comprehensive Condition Assessment If coverings or other obstructions exist, either partial visual inspection through the use of drilled holes and a fiberscope shall be used or visual inspection shall be performed by local removal of covering materials in accordance with the following requirements:

1. If construction documents exist, at least three different primary connections are to be exposed for each connection type. If no capacity-reducing deviations from the construction documents exist, the sample is considered representative. If deviations are noted, then all coverings from primary connections of that type are to be removed, unless the connection strength is ignored in the seismic evaluation; and
2. In the absence of construction documents, at least 50% of the top and at least 50% of the base connections for each type of vertical element in the seismic-force-resisting system, as well as collectors, boundary components, and tie-downs, are to be exposed and inspected or inspected fiberscopically. If common detailing is observed, this sample is considered representative. If any details or conditions are observed that result in a discontinuous load path, all primary connections are to be exposed.

12.2.3.3 Basis for the Mathematical Building Model The results of the condition assessment shall be used to quantify the following items needed to create the mathematical building model:

1. Component section properties and dimensions;
2. Component configuration and eccentricities;

3. Interaction of nonstructural components and their involvement in seismic force resistance; and
4. Presence and effects of alterations to the structural system.

All deviations noted between available construction records and as-built conditions shall be accounted for in the structural analysis.

C12.2.3.3 Basis for the Mathematical Building Model The acceptance criteria for existing components depend on the design professional's knowledge of the condition of the structural system and material properties, as previously noted. Certain damage—such as water staining, evidence of prior leakage, corrosion, splitting, cracking, checking, buckling, warping, and twisting—may be acceptable. The design professional must establish a case-by-case acceptance for such damage on the basis of capacity loss or deformation constraints. Degradation at connection points should be carefully examined; significant capacity reductions may be involved, as well as a loss of ductility.

12.2.4 Knowledge Factor A knowledge factor, κ, for computation of wood and CFS light-frame component capacities and permissible deformations shall be selected in accordance with Section 6.2.4.

12.2.4.1 Wood Components and Assemblies If a comprehensive condition assessment is performed in accordance with Section 12.2.3.2.2, a knowledge factor, $\kappa = 1.0$, shall be permitted in conjunction with default properties of Section 12.2.2.5, and testing in accordance with Section 12.2.2.4 is not required.

12.2.4.2 CFS Light-Frame Construction Components and Assemblies If a comprehensive condition assessment is performed in accordance with Section 12.2.3.2.2, a knowledge factor, $\kappa = 1.0$, shall be permitted in conjunction with default properties of Section 12.2.2.5, and testing in accordance with Section 12.2.2.4 is not required.

12.3 GENERAL ASSUMPTIONS AND REQUIREMENTS

12.3.1 Stiffness Component stiffnesses shall be calculated in accordance with Sections 12.4 through 12.7.

12.3.1.1 Use of Linear Procedures Where design actions are determined using the linear procedures of Chapter 7, the stiffnesses for wood and CFS light-frame materials comprising individual components shall be based on the material properties determined in accordance with Section 12.2.2.

12.3.1.2 Use of Nonlinear Procedures for Wood Construction Where design actions are determined using the nonlinear procedures of Chapter 7, component force–deformation response shall be represented by nonlinear force–deformation relations. Linear relations shall be permitted where nonlinear response does not occur in the component. The nonlinear force–deformation relation shall be either based on experimental evidence or on the generalized force–deformation relation shown in Fig. 12-1, with parameters c, d, and e as defined in Table 12-4 for wood components and assemblies. Distance d is considered the maximum deflection at the point of first loss of strength. Distance e is the maximum deflection at a strength or capacity equal to value c. Where the yield strength is not determined by testing in accordance with Section 7.6, the yield strength at point B shall be taken as the expected strength at point C divided by 1.5.

12.3.1.3 Use of Nonlinear Procedures for CFS Light-Frame Construction Where design actions are determined using the nonlinear procedures of Chapter 7, component force–deformation response shall be represented by nonlinear force–deformation relations. Linear relations shall be permitted where nonlinear response does not occur in the component. The nonlinear force–deformation relation shall be based on experimental evidence or parameters derived in accordance with the generalized force–deformation relation shown in Fig. 12-1.

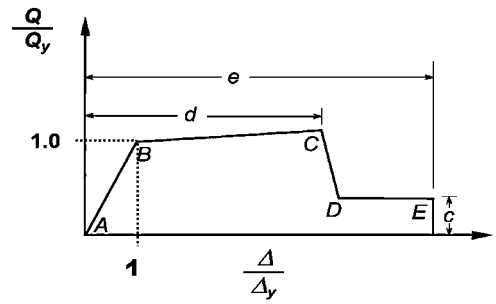

FIG. 12-1. Generalized Force–Deformation Relation for Wood or CFS Light-Frame Elements or Components

12.3.2 Strength and Acceptance Criteria

12.3.2.1 General Actions in a structure shall be classified as being either deformation controlled or force controlled, as defined in Section 7.5.1. Design strengths for deformation-controlled and force-controlled actions shall be calculated in accordance with Sections 12.3.2.2 and Sections 12.3.2.3, respectively.

12.3.2.2 Deformation-Controlled Actions The requirements for deformation-controlled actions shall be in accordance with Section 12.3.2.2.1 for wood construction and 12.3.2.2.2 for CFS light-frame construction.

C12.3.2.2 Deformation-Controlled Actions The relative magnitude of the m-factors alone should not be interpreted as a direct indicator of performance. The stiffness of a component and its expected strength, Q_{CE}, must be considered where evaluating expected performance. For example, whereas the m-factors for gypsum plaster are higher than those for wood structural panels, the stiffness assigned to gypsum plaster is relatively high and the expected strength values are much lower than those for wood structural panels. As a result, worse performance for a given displacement is predicted.

12.3.2.2.1 Wood Construction Expected strengths for deformation-controlled actions, Q_{CE}, shall be taken as the mean maximum strengths obtained experimentally or calculated using accepted principles of mechanics. Unless other procedures are specified in this chapter, expected strengths shall be permitted to be based on 1.5 times the yield strengths. Yield strengths shall be determined using LRFD procedures contained in NDS, except that the resistance factor, ϕ, shall be taken as 1.0 and expected material properties shall be determined in accordance with Section 12.2.2. Acceptance criteria for deformation-controlled actions shall be as specified in Sections 12.4 through 12.7.

12.3.2.2.2 CFS Light-Frame Construction Expected strengths for deformation-controlled actions, Q_{CE}, shall be taken as the mean maximum strengths obtained experimentally or calculated using accepted principles of mechanics. Unless other procedures are specified in this chapter, expected strengths shall be permitted to be based on 1.5 times the yield strengths. Yield strengths shall be determined using LRFD procedures contained in AISI S213, except that the resistance factor, ϕ, shall be taken as 1.0 and expected material properties shall be

determined in accordance with Section 12.2.2. Acceptance criteria for deformation-controlled actions shall be as specified in Sections 12.4 through 12.7.

12.3.2.3 Force-Controlled Actions The requirements for force-controlled actions shall be in accordance with Section 12.3.2.3.1 for wood construction and 12.3.2.3.2 for CFS light-frame construction.

C12.3.2.3 Force-Controlled Actions The maximum forces developed in yielding shear walls and diaphragms are consistently 1.5 to 2 times the yield force. Other components and connectors exhibit similar overstrength.

12.3.2.3.1 Wood Construction Where determined by testing, lower-bound strengths for force-controlled actions, Q_{CL}, shall be taken as mean minus one standard deviation of the maximum strengths obtained experimentally. Where calculated using established principles of mechanics or based on LRFD procedures contained in NDS, the resistance factor, ϕ, shall be taken as 1.0, and default lower-bound material properties determined in accordance with Section 12.2.2.5 shall be used.

Where the force-controlled design actions, Q_{UF}, calculated in accordance with Section 7.5.2.1.2, are based on a limit-state analysis, the expected strength of the components delivering load to the component under consideration shall be taken as not less than 1.5 times the yield strength.

12.3.2.3.2 CFS Light-Frame Construction Where determined by testing, lower-bound strengths for force-controlled actions, Q_{CL}, shall be taken as mean minus one standard deviation of the maximum strengths obtained experimentally. Where calculated using established principles of mechanics or based on LRFD procedures contained in AISI S213, the resistance factor, ϕ, shall be taken as 1.0, and default lower-bound material properties determined in accordance with Section 12.2.2.5 shall be used.

Where the force-controlled design actions, Q_{UF}, calculated in accordance with Section 7.5.2.1.2, are based on a limit-state analysis, the expected strength of the components delivering load to the component under consideration shall be taken as not less than 1.5 times the yield strength.

12.3.3 Connection Requirements The connections between wood and CFS light-frame components shall be addressed in accordance with Sections 12.3.3.1 and 12.3.3.2, respectively.

C12.3.3 Connection Requirements In considering connections in this standard, connectors are distinguished from bodies of connections and bodies of connection hardware. Connectors, which consist of the nails, screws, welds, lags, bolts, split rings, and shear plates used to link pieces of a connection assembly together, are considered to have the ability to deform in a ductile manner, provided that the bodies of the connections or bodies of connection hardware do not prematurely fracture. Much of the ductility in a light-frame shear wall or diaphragm assembly comes from the connectors, such as bending in the nails before the point where nails pull through the sheathing material. In bolted connections, the connectors, including bolt bending or crushing of the wood around the bolt hole, are ductile sources of deformation in an assembly. Brittle failure can occur in the bodies of connections, such as net section fracture or splitting in an end post, or in the bodies of connection hardware, such as tie-downs. For this reason, connectors are considered deformation controlled, and bodies of connections and bodies of connection hardware are considered force controlled. Where determining the demand on force-controlled portions of the connection assembly, use of a limit-state analysis to determine the maximum force that can be delivered to the connection is recommended.

Where computing the strength of connections, all potential limit states should be considered, including those associated with the bodies of connections, the bodies of connection hardware, and connectors with which the assembly may be composed. For example, in addition to the strength of a tie-down device itself, limit states for the stud bolts, foundation bolts, and net section of the end post should be considered. The controlling condition determines the expected or lower-bound strength of the connection.

12.3.3.1 Wood Construction Unless otherwise specified in this standard, connections between wood components of a seismic-force-resisting system shall be considered in accordance with this section. Demands on connectors, including nails, screws, lags, bolts, split rings, and shear plates used to link wood components to other wood or metal components shall be considered deformation-controlled actions. Demands on bodies of connections and bodies of connection hardware shall be considered force-controlled actions.

12.3.3.2 CFS Light-Frame Construction Unless otherwise specified in this standard, connections between CFS light-frame components of a seismic-force-resisting system shall be considered in accordance with this section. Demands on connectors, including, as applicable, screws and bolts used to link components, shall be considered deformation-controlled actions. Demands on bodies of connections, and bodies of connection hardware, shall be considered force-controlled actions.

12.3.4 Components Supporting Discontinuous Shear Walls

12.3.4.1 Wood Construction Axial compression on wood posts and flexure and shear on wood beams that support discontinuous shear walls shall be considered force-controlled actions. Lower-bound strengths shall be determined in accordance with Section 12.3.2.3.

12.3.4.2 CFS Light-Frame Construction Axial compression on chord studs and flexure and shear on tracks that support discontinuous shear walls shall be considered force-controlled actions. Lower-bound strengths shall be determined in accordance with Section 12.3.2.3.

12.3.5 Retrofit Measures Retrofit measures for wood construction shall be in accordance with Section 12.3.5.1. Retrofit measures for CFS light-frame construction shall be in accordance with Section 12.3.5.2.

C12.3.5 Retrofit Measures Special attention is required where connections such as bolts and nails are encountered.

Wood structural panels are used to provide lateral strength and stiffness to most modern light-frame buildings and are generally recommended for the retrofit of horizontal diaphragms and shear walls of existing buildings. The system relies on the in-plane strength and stiffness of the panels and their connection to the framing. Panels are connected together by nailing into the same structural member to create, in effect, one continuous panel. The various panels are described in Sections 12.4 and 12.5. The performance of the structural panels is dependent to a great degree on the attachment to the framing. The attachment spacing and effectiveness should be investigated if the existing panels are expected to withstand significant loads. If fasteners are to be added to existing panels, they should be the same size as the existing fasteners.

12.3.5.1 Wood Construction If portions of a wood building structure are deficient for the selected Performance Objective,

the structure shall be rehabilitated, reinforced, or replaced. If replacement of the element is selected or if new elements are added, the new elements shall satisfy the acceptance criteria of this standard and shall be detailed and constructed in accordance with an approved building code. If reinforcement of the existing framing system is selected, the following factors shall be considered:

1. Degree of degradation in the component from such mechanisms as biological attack, creep, high static or dynamic loading, moisture, or other effects;
2. Level of steady-state stress in the components to be reinforced and the potential to temporarily remove this stress, if appropriate;
3. Elastic and inelastic properties of existing components; strain compatibility with any new reinforcement materials shall be provided;
4. Ductility, durability, and suitability of existing connectors between components, and access for reinforcement or modification;
5. Efforts necessary to achieve appropriate fit-up for reinforcing components and connections;
6. Load path and deformation of the components at end connections; and
7. Presence of components manufactured with archaic materials, which may contain material discontinuities, to be examined during the retrofit design to ensure that the selected reinforcement is feasible.

12.3.5.2 CFS Light-Frame Construction If portions of a CFS light-frame building structure are deficient for the selected Performance Objective, the structure shall be retrofitted, reinforced, or replaced. If replacement of the element is selected or if new elements are added, the new elements shall satisfy the acceptance criteria of this standard and shall be detailed and constructed in accordance with an approved building code. If reinforcement of the existing framing system is selected, the following factors shall be considered:

1. Degree of degradation in the component from such mechanisms as corrosion, high static or dynamic loading, or other effects;
2. Level of steady-state stress in the components to be reinforced and the potential to temporarily remove this stress, if appropriate;
3. Elastic and inelastic properties of existing components; strain compatibility with any new reinforcement materials shall be provided;
4. Ductility, durability, and suitability of existing connectors between components, and access for reinforcement or modification;
5. Efforts necessary to achieve appropriate fit-up for reinforcing components and connections;
6. Load path and deformation of the components at end connections; and
7. Presence of components manufactured with archaic materials, which can contain material discontinuities, to be examined during the retrofit design to ensure that the selected reinforcement is feasible.

12.4 WOOD AND CFS LIGHT-FRAME SHEAR WALLS

12.4.1 General Wood and CFS light-frame shear walls shall be categorized as primary or secondary components in accordance with Section 7.5.1.

Dissimilar wall sheathing materials on opposite sides of a wall shall be permitted to be combined where there are test data to substantiate the stiffness and strength properties of the combined systems. Otherwise, walls sheathed with dissimilar materials shall be analyzed based on only the wall sheathing with the greatest capacity.

For overturning calculations on shear wall elements, stability shall be evaluated in accordance with Section 7.2.8. Net tension caused by overturning shall be resisted by uplift connections.

The effects of openings in shear walls shall be considered. Where required, reinforcement consisting of chords and collectors shall be added to provide sufficient load capacity around openings to meet the strength requirements for shear walls.

Connections between shear walls and other components, including diaphragm ties, collectors, diaphragms, posts, and foundations, shall be considered in accordance with Section 12.3.3 and shall be designed for forces calculated in accordance with Chapter 7. Components supporting discontinuous shear walls shall be considered in accordance with Section 12.3.4.

The expected strength, Q_{CE}, of wood frame shear wall assemblies shall be determined in accordance with Section 12.4.4. The expected strength, Q_{CE}, of CFS light-frame shear walls shall be determined in accordance with Section 12.4.5.

C12.4.1 General The behavior of wood and CFS light-frame shear walls is complex and influenced by many factors; the primary factor is the wall sheathing. Provisions for combination of dissimilar materials on opposite sides of the wall require coordination of *m*-factors and modeling parameters for default shear wall types. Where test data are available, there is no restriction on consideration of strength and stiffness of the wall assembly sheathed on opposite sides with dissimilar materials. Further information on approaches for consideration of effect of dissimilar materials on strength and deformation response of a shear wall can be obtained from FEMA P-807 (2013).

Wall sheathings can be divided into many categories (e.g., brittle, elastic, strong, weak, good at dissipating energy, or poor at dissipating energy). In many existing buildings, the walls were not expected to act as shear walls (e.g., a wall sheathed with wood lath and plaster). Most shear walls are designed based on values from monotonic load tests and historically accepted values. The allowable shear per unit length used for design was assumed to be the same for long walls, narrow walls, walls with stiff tie-downs, and walls with flexible tie-downs. Only recently have shear wall assemblies—framing, covering, and anchorage—been tested using cyclic loading.

Another major factor influencing the behavior of shear walls is the aspect ratio of the wall. The AWC SDPWS limits the aspect ratio (height-to-width) for wood structural panel shear walls to 2:1 for full design shear capacity and permits reduced design shear capacities for walls with aspect ratios up to 3.5:1. The interaction of the floor and roof with the wall, the end conditions of the wall, and the redundancy or number of walls along any wall line would affect the wall behavior for walls with the same aspect ratio. In addition, the rigidity of the tie-downs at the wall ends has an important effect in the behavior of narrow walls.

The presence of any but small openings in shear walls causes a reduction in the stiffness and strength because of a reduced length of wall available to resist seismic forces. Special analysis techniques and detailing are required at the openings. The presence or addition of chord members around the openings reduces the loss in overall stiffness and limits damage in the area of openings. AWC SDPWS covers design of shear walls with openings.

For wood and CFS light-frame shear walls, the important limit states are sheathing failure, connection failure, tie-down failure, and excessive deflection. Limit states define the point of Life Safety and, often, of structural stability. To reduce damage or retain usability immediately after an earthquake, deflection must be limited (see Section 1.5.6). The ultimate capacity is the maximum capacity of the assembly, regardless of the deflection.

12.4.2 Types of Wood Frame Shear Walls

12.4.2.1 Existing Wood Frame Shear Walls

12.4.2.1.1 Single-Layer Horizontal Lumber Sheathing or Siding Single-layer horizontal lumber sheathing or siding shall include horizontal sheathing or siding applied directly to studs or horizontal boards nailed to studs 2 in. or wider.

C12.4.2.1.1 Single Layer Horizontal Lumber Sheathing or Siding Typically, 1-in.-wide horizontal sheathing or siding is applied directly to studs. Forces are resisted by nail couples. Horizontal boards, from 1-in. × 4-in. to 1-in. × 12-in., typically are nailed to 2-in. or wider studs with two or more nails (typically 8d or 10d) per stud.

12.4.2.1.2 Diagonal Lumber Sheathing Diagonal lumber sheathing shall include sheathing applied at approximately a 45-degree angle to the studs in a single or double layer with three or more nails per stud, sill, and top plates.

C12.4.2.1.2 Diagonal Lumber Sheathing Typically, 1-in. × 6-in. to 1-in. × 8-in. diagonal sheathing, applied directly to the studs, resists lateral forces primarily by triangulation (i.e., direct tension and compression). A second layer of diagonal sheathing is sometimes added on top of the first layer, at 90 degrees to the first layer (called double diagonal sheathing), for increased load capacity and stiffness.

12.4.2.1.3 Vertical Wood Siding Only Vertical wood siding shall include vertical boards nailed directly to studs and blocking 2 in. or wider.

C12.4.2.1.3 Vertical Wood Siding Only Typically, 1-in. × 8-in., 1-in. × 10-in., or 1-in. × 12-in. vertical boards are nailed directly to 2-in. or wider studs and blocking with 8d or 10d galvanized nails. The lateral forces are resisted by nail couples, similarly to horizontal siding.

12.4.2.1.4 Wood Siding over Horizontal Sheathing Wood siding over horizontal sheathing shall include siding connected to horizontal sheathing with nails that go through the sheathing to the studs.

C12.4.2.1.4 Wood Siding over Horizontal Sheathing Typically, siding is nailed with 8d or 10d galvanized nails through the sheathing to the studs. Lateral forces are resisted by nail couples for both layers.

12.4.2.1.5 Wood Siding over Diagonal Sheathing Wood siding over diagonal sheathing shall include siding connected to diagonal sheathing with nails that go through the sheathing to the studs.

C12.4.2.1.5 Wood Siding over Diagonal Sheathing Typically, siding is nailed with 8d or 10d galvanized nails to and through the sheathing into the studs. Diagonal sheathing provides most of the lateral resistance by triangulation (see Section 12.4.2.1.2).

12.4.2.1.6 Wood Structural Panel Sheathing or Siding Wood structural panel sheathing or siding shall include wood structural panels oriented vertically or horizontally and nailed to studs 2 in. or wider.

C12.4.2.1.6 Wood Structural Panel Sheathing or Siding Typically, 4-ft × 8-ft panels are applied vertically or horizontally to 2-in. or wider studs and nailed with 6d to 10d nails. These panels resist lateral forces by panel diaphragm action.

12.4.2.1.7 Stucco on Studs Stucco on studs (over sheathing or wire-backed building paper) shall include Portland cement plaster applied to wire lath or expanded metal lath. Wire lath or expanded metal lath shall be nailed to the studs.

C12.4.2.1.7 Stucco on Studs Typically, 7/8-in. Portland cement plaster is applied to wire lath or expanded metal lath. Wire lath or expanded metal lath is nailed to the studs with 11-gauge nails or 16-gauge staples at 6 in. on center. This assembly resists lateral forces by panel diaphragm action.

12.4.2.1.8 Gypsum Plaster on Wood Lath Gypsum plaster on wood lath shall include gypsum plaster keyed onto spaced wood lath that is nailed to the studs.

C12.4.2.1.8 Gypsum Plaster on Wood Lath Typically, 1-in. gypsum plaster is keyed onto spaced 1-1/4-in. wood lath that is nailed to studs with 13-gauge nails. Gypsum plaster on wood lath resists lateral forces by panel diaphragm-shear action.

12.4.2.1.9 Gypsum Plaster on Gypsum Lath Gypsum plaster on gypsum lath shall include plaster that is glued or keyed to gypsum lath nailed to studs.

C12.4.2.1.9 Gypsum Plaster on Gypsum Lath Typically, 1/2-in. plaster is glued or keyed to 16-in. × 48-in. gypsum lath, which is nailed to studs with 13-gauge nails. Gypsum plaster on gypsum lath resists lateral forces by panel diaphragm action.

12.4.2.1.10 Gypsum Wallboard or Drywall Gypsum wallboard or drywall shall include manufactured panels with a paper facing and gypsum core that are oriented horizontally or vertically and nailed to studs or blocking in a single layer or multiple layers.

C12.4.2.1.10 Gypsum Wallboard or Drywall Typically, 4-ft × 8-ft to 4-ft × 12-ft panels are laid up horizontally or vertically and nailed to studs or blocking with 5d to 8d cooler nails at 4 to 7 in. on center. Multiple layers are used in some situations. The assembly resists lateral forces by panel diaphragm action.

12.4.2.1.11 Gypsum Sheathing Gypsum sheathing shall include manufactured gypsum panels that are oriented horizontally or vertically and nailed to studs or blocking.

C12.4.2.1.11 Gypsum Sheathing Typically, 4-ft × 8-ft to 4-ft × 12-ft panels are laid up horizontally or vertically and nailed to studs or blocking with galvanized 11-gauge 7/16-in. diameter head nails at 4 to 7 in. on center. Gypsum sheathing is usually installed on the exterior of structures with siding over it to improve fire resistance. Lateral forces are resisted by panel diaphragm action.

12.4.2.1.12 Plaster on Metal Lath Plaster on metal lath shall include gypsum plaster applied to expanded wire lath that is nailed to the studs.

C12.4.2.1.12 Plaster on Metal Lath Typically, 1-in. gypsum plaster is applied on expanded wire lath that is nailed to the studs. Lateral forces are resisted by panel diaphragm action.

12.4.2.1.13 Horizontal Lumber Sheathing with Cut-In Braces or Diagonal Blocking Horizontal lumber sheathing with cut-in braces or diagonal blocking shall include 1-in.-wide × horizontal sheathing or siding applied directly to studs or 1-in. × 4-in. to 1-in. × 12-in. horizontal boards nailed to studs 2 in. or wider.

The wall shall be braced with diagonal cut-in braces or blocking extending from corner to corner.

C12.4.2.1.13 Horizontal Lumber Sheathing with Cut-In Braces or Diagonal Blocking Horizontal sheathing with cut-in braces or diagonal blocking is installed in the same manner as horizontal sheathing, except that the wall is braced with cut-in (or let-in) braces or blocking. The bracing is usually installed at a 45-degree angle and nailed with 8d or 10d nails at each stud and at the top and bottom plates. Bracing provides only nominal increase in resistance.

12.4.2.1.14 Fiberboard or Particleboard Sheathing Fiberboard or particleboard sheathing walls shall include fiberboard or particleboard panels that are applied directly to the studs with nails.

C12.4.2.1.14 Fiberboard or Particleboard Sheathing Typically, 4-ft × 8-ft panels are applied directly to the studs with nails. Fiberboard requires nails (typically 8d) with large heads, such as roofing nails. Lateral forces are resisted by panel diaphragm action.

12.4.2.2 Enhanced Wood Frame Shear Walls Enhanced wood frame shear walls shall include existing shear walls retrofitted in accordance with this standard or an approved method. Enhanced wood shear walls consisting of wood structural panel sheathing added to unfinished stud walls or wood structural panel sheathing overlay on existing shear walls shall be evaluated in accordance with Section 12.4.4.6. Where wood structural panel sheathing is applied over existing sheathing, the expected strength shall be based on the expected strength of the overlaid material only and reduced by 20% unless a different value is substantiated by testing.

C12.4.2.2 Enhanced Wood Frame Shear Walls Possible retrofit methods for wood shear walls include the following:

Wood Structural Panel Sheathing Added to Unfinished Stud Walls Wood structural panel sheathing may be added to one side of unfinished stud walls to increase the wall shear capacity and stiffness.

Examples of unfinished stud walls are cripple walls and attic end walls.

Wood Structural Panel Sheathing Overlay of Existing Shear Walls The following types of existing shear walls may be overlaid with wood structural panel sheathing:

1. Single-layer horizontal lumber sheathing or siding;
2. Single-layer diagonal lumber sheathing;
3. Vertical wood siding only;
4. Gypsum plaster or wallboard on studs (also on gypsum lath and gypsum wallboard);
5. Gypsum sheathing;
6. Horizontal lumber sheathing with cut-in braces or diagonal blocking; and
7. Fiberboard or particleboard sheathing.

This method results in a moderate increase in shear capacity and stiffness and can be applied in most places in most structures. For example, plywood sheathing can be applied over an interior wall finish. For exterior applications, the wood structural panel can be nailed directly through the exterior finish to the studs.

Where existing shear walls are overlaid with wood structural panels, the connections of the overlay to the existing framing must be considered. Splitting can occur in both the wood sheathing and the framing. The length of nails needed to achieve full-capacity attachment in the existing framing must be determined. This length varies with the thickness of the existing wall covering. Sometimes staples are used instead of nails to prevent splitting. The overlay is stapled to the wood sheathing instead of the framing. Nails are recommended for overlay attachment to the underlying framing. In some cases, new blocking at wood structural panel joints may also be needed.

Wood Structural Panel Sheathing Added Under Existing Wall Covering The existing wall covering may be removed, wood structural panel sheathing, connections, and tie-downs may be added, and the wall covering may be replaced.

This method results in a significant increase in shear capacity. In some cases, where seismic forces are large, this may be the best method of retrofit. This retrofit procedure can be used on any of the existing shear wall assemblies. Additional framing members can be added if necessary, and the wood structural panels must be cut to fit existing stud spacings.

Increased Attachment Additional nailing, collector straps, splice straps, tie-downs, or other collectors may be added to existing wood structural panel-sheathed walls to increase their rigidity and capacity.

For existing structural panel-sheathed walls, additional nailing results in higher capacity and increased stiffness. Other connectors—collector straps, splice straps, or tie-downs—are often necessary to increase the rigidity and capacity of existing structural panel shear walls. Increased ductility does not necessarily result from the additional nailing. Access to these shear walls often requires the removal and replacement of existing finishes.

Enhanced Connections Where absent, new connections between shear walls and diaphragms and foundations may be added. Where needed, blocking between floor and roof joists at shear walls may be added. Blocking should be connected to the shear wall and the diaphragm to provide a load path for seismic forces. Wood for framing members or blocking should be kiln dried or well seasoned to prevent it from shrinking away from the existing framing or from splitting.

Most shear wall retrofit procedures require a check of all existing connections, especially to diaphragms and foundations. Sheet metal framing clips can be used to provide a verifiable connection between the wall framing, the blocking, and the diaphragm. Framing clips are also often used for connecting blocking or rim joists to sill plates. Frequently, bolting between sill plates and foundations must be added.

The framing in existing buildings is usually very dry, hard, and easily split. Care must be taken not to split the existing framing when adding connectors. Predrilling holes for nails reduces splitting, and framing clips that use small nails are less likely to split the existing framing.

12.4.2.3 New Wood Frame Shear Walls New wood frame shear walls shall include all new wood structural panel shear walls added to an existing seismic-force-resisting system. Design of new walls shall satisfy the acceptance criteria of this standard. Details of construction for new shear walls, including sill plate anchorage details, tie-down anchor details, nailing details for sheathing, and dimensional limitations for studs and sill plates, shall be in accordance with the requirements of the AWC SDPWS or an approved building code.

C12.4.2.3 New Wood Frame Shear Walls New shear walls using the existing framing generally are sheathed with wood structural panels (i.e., plywood or oriented strand board). The thickness and grade of these panels can vary. In most cases, the panels are placed vertically and are fastened directly to the studs

and plates. This method reduces the need for blocking at the joints. All edges of panels must be blocked to obtain full capacity. The thickness, size, and number of fasteners and the aspect ratio and connections determine the capacity of the new walls. Additional information on the various panels available and their application for shear walls can be found in AWC SDPWS and documents from the American Plywood Association (APA) such as Tissell (1993), *Plywood Design Specification* (APA 1997), and *Panel Design Specification* (APA 2008).

12.4.3 Types of CFS Light-Frame Shear Walls

12.4.3.1 Existing CFS Light-Frame Shear Walls

12.4.3.1.1 Three-Coat Plaster on Metal Lath Plaster on metal lath shall include gypsum plaster applied to metal lath or expanded metal lath that is connected to the CFS framing with wire ties.

C12.4.3.1.1 Three-Coat Plaster on Metal Lath Typically, 1 in. of gypsum plaster is applied to metal lath or expanded metal that is connected to the metal framing with wire ties.

12.4.3.1.2 Wood Structural Panel Sheathing Wood structural panel shear walls shall include structural panels that are attached to the studs and tracks.

C12.4.3.1.2 Wood Structural Panel Sheathing Typically, the wood structural panels are applied vertically and screwed to the studs and tracks with No. 8 to No. 12 self-tapping screws. If applied horizontally, panel edges not screwed to the framing members are screwed to blocking.

12.4.3.1.3 Gypsum Board Sheathing Gypsum board shear walls shall include gypsum board panels that are attached to the studs.

C12.4.3.1.3 Gypsum Board Sheathing Typically, 4-ft × 8-ft to 4-ft × 12-ft panels are laid up horizontally and screwed with No. 6 by 1-in.-long self-tapping screws to studs at 4 to 7 in. on center.

12.4.3.2 Enhanced CFS Light-Frame Shear Walls Enhanced CFS light-frame shear walls shall include existing shear walls retrofitted in accordance with this standard or an approved method.

C12.4.3.2 Enhanced CFS Light-Frame Shear Walls Possible retrofit methods for CFS light-frame shear walls include the following:

Wood Structural Panel or Steel Sheet Sheathing Added to Existing CFS Light-Frame Stud Walls Any existing covering other than wood structural panels or steel sheets should be removed and replaced with wood structural panels or steel sheets. Connections to the diaphragm(s) and the foundation should be checked and strengthened where they are not adequate to resist enhanced wall capacity.

Increased Attachment Screws and connections can be added to connect existing wood structural panels or steel sheets to framing.

12.4.3.3 New CFS Light-Frame Shear Walls New CFS light-frame shear walls shall include all new wood structural panel, steel sheet, gypsum board, fiberboard, and diagonal strap elements added to an existing seismic-force-resisting system. Design of new shear walls shall satisfy the acceptance criteria of this standard. Details of construction for new shear walls, including track anchorage details, tie-down anchor details, fastening details for sheathing, and dimensional limitations for studs and tracks, shall be in accordance with the requirements of AISI S213 or an approved building code.

12.4.4 Stiffness, Strength, Acceptance Criteria, and Connection Design for Wood Frame Shear Walls

12.4.4.1 Single-Layer Horizontal Lumber Sheathing or Siding Shear Walls

12.4.4.1.1 Stiffness of Single-Layer Horizontal Lumber Sheathing or Siding Shear Walls The deflection of single-layer horizontal lumber sheathing or siding shear walls shall be calculated in accordance with Eq. (12-1):

$$\Delta_y = v_y h / G_d + (h/b) d_a \tag{12-1}$$

where v_y = shear at yield in the direction under consideration (lb/ft);
h = shear wall height (ft);
G_d = diaphragm shear stiffness from Table 12-2 (lb/in.);
b = shear wall width (ft); and
d_a = elongation of anchorage at end of wall determined by anchorage details and load magnitude (in.).

Properties used to compute shear wall deflection and stiffness shall be based on Section 12.2.2.

C12.4.4.1.1 Stiffness of Single-Layer Horizontal Lumber Sheathing or Siding Shear Walls Horizontal lumber sheathed shear walls are weak and very flexible and have long periods of vibration. The strength and stiffness degrade with cyclic loading. These shear walls are suitable only where seismic forces are low and deflection control is not required.

12.4.4.1.2 Strength of Single-Layer Horizontal Lumber Sheathing or Siding Shear Walls The expected strength of horizontal sheathing or siding shall be determined in accordance with Section 12.2.2.

C12.4.4.1.2 Strength of Single-Layer Horizontal Lumber Sheathing or Siding Shear Walls This capacity is dependent on the width of the boards, spacing of the studs, and the size, number, and spacing of the nails. Allowable capacities are provided for various configurations in AWC SDPWS. Allowable capacities are listed for various configurations together with a description of the nail couple method, in the *Western Woods Use Book* (WWPA 1996). See also *Guidelines for the Design of Horizontal Wood Diaphragms*, ATC-7 (1981), for a discussion of the nail couple method.

12.4.4.1.3 Acceptance Criteria for Single-Layer Horizontal Lumber Sheathing or Siding Shear Walls For linear procedures, *m*-factors for use with deformation-controlled actions shall be taken from Table 12-3. For nonlinear procedures, the coordinates of the generalized force–deformation relations, described by Fig. 12-1, and deformation acceptance criteria for primary and secondary components shall be taken from Table 12-4.

C12.4.4.1.3 Acceptance Criteria for Single-Layer Horizontal Lumber Sheathing or Siding Shear Walls Deformation acceptance criteria are determined by the capacity and gravity-load and seismic-force-resisting components and elements to deform with limited damage or without failure. Excessive deflection could result in major damage to the structure and/or its contents.

12.4.4.1.4 Connections of Single-Layer Horizontal Lumber Sheathing or Siding Shear Walls The connections between parts of the shear wall assembly and other elements of the seismic-force-resisting system shall be considered in accordance with Section 12.4.1.

C12.4.4.1.4 Connections of Single-Layer Horizontal Lumber Sheathing or Siding Shear Walls The capacity and ductility of

Table 12-3. Numerical Acceptance Factors for Linear Procedures—Wood Components

		m-Factors				
			Primary		Secondary	
Wood Frame Shear Wall Types[a,b]	**Height/Width Ratio *(h/b)***	**IO**	**LS**	**CP**	**LS**	**CP**
Horizontal sheathing	≤1.0	1.6	3.4	4.0	4.0	5.0
Wood siding over horizontal sheathing	≤1.5	1.3	2.3	2.6	2.8	3.0
Diagonal sheathing	≤1.5	1.4	2.7	3.1	3.1	3.6
Wood siding over diagonal sheathing	≤2.0	1.3	2.0	2.3	2.5	2.8
Double diagonal sheathing	≤2.0	1.2	1.7	1.9	2.0	2.5
Wood structural panel sheathing or siding	≤3.5	1.7	3.8	4.5	4.5	5.5
Stucco on studs[c]	≤1.0	1.5	3.1	3.6	3.6	4.0
	2.0	1.3	2.2	2.5	5.0	6.0
Stucco over 1-in. × horizontal sheathing	≤2.0	1.5	3.0	3.5	3.5	4.0
Gypsum plaster on wood lath	≤2.0	1.7	3.9	4.6	4.6	5.1
Gypsum plaster on gypsum lath	≤2.0	1.8	4.2	5.0	4.2	5.5
Gypsum plaster on metal lath	≤2.0	1.7	3.7	4.4	3.7	5.0
Gypsum sheathing	≤2.0	1.9	4.7	5.7	4.7	6.0
Gypsum wallboard[c]	≤1.0	1.9	4.7	5.7	4.7	6.0
	2.0	1.6	3.4	4.0	3.8	4.5
Horizontal 1-in. × 6-in. sheathing with cut-in braces or diagonal blocking	≤1.0	1.7	3.7	4.4	4.2	4.8
Fiberboard or particleboard sheathing	≤1.5	1.6	3.2	3.8	3.8	5.0
Diaphragms[d]	Length/Width Ratio (*L/b*)					
Single straight sheathing, chorded	≤3.0	1	2.0	2.5	2.4	3.1
Single straight sheathing, unchorded	≤3.0	1	1.5	2.0	1.8	2.5
Double straight sheathing, chorded	≤3.0	1.25	2.0	2.5	2.3	2.8
Double straight sheathing, unchorded	≤3.0	1	1.5	2.0	1.8	2.3
Single diagonal sheathing, chorded	≤3.0	1.25	2.0	2.5	2.3	2.9
Single diagonal sheathing, unchorded	≤3.0	1	1.5	2.0	1.8	2.5
Straight sheathing over diagonal sheathing, chorded	≤3.0	1.5	2.5	3.0	2.8	3.5
Straight sheathing over diagonal sheathing, unchorded	≤3.0	1.25	2.0	2.5	2.3	3.0
Double diagonal sheathing, chorded	≤3.5	1.5	2.5	3.0	2.9	3.5
Double diagonal sheathing, unchorded	≤3.5	1.25	2.0	2.5	2.4	3.1
Wood structural panel, blocked, chorded[c]	≤3.0	1.5	3.0	4.0	3.0	4.5
	4	1.5	2.5	3.0	2.8	3.5
Wood structural panel, unblocked, chorded[c]	≤3	1.5	2.5	3.0	2.9	4.0
	4	1.5	2.0	2.5	2.6	3.2
Wood structural panel, blocked, unchorded[c]	≤2.5	1.25	2.5	3.0	2.9	4.0
	3.5	1.25	2.0	2.5	2.6	3.2
Wood structural panel, unblocked, unchorded[c]	≤2.5	1.25	2.0	2.5	2.4	3.0
	3.5	1.0	1.5	2.0	2.0	2.6
Wood structural panel overlay on sheathing, chorded[c]	≤3	1.5	2.5	3.0	2.9	4.0
	4	1.5	2.0	2.5	2.6	3.2
Wood structural panel overlay on sheathing, unchorded[c]	≤2.5	1.25	2.0	2.5	2.4	3.0
	3.5	1.0	1.5	2.0	1.9	2.6
Components/Elements						
Frame components subject to axial tension and/or bending		1.0	2.5	3.0	2.5	4.0
Frame components subject to axial compression		Force controlled				
Wood piles, bending and axial		1.2	2.5	3.0	—	—
Cantilever pole structures, bending and axial		1.2	3.0	3.5	—	—
Pole structures with diagonal bracing		1.0	2.5	3.0	—	—
Connectors[e]						
Nails—8d and larger—wood to wood		2.0	6.0	8.0	8.0	9.0
Nails—8d and larger—metal to wood		2.0	4.0	6.0	5.0	7.0
Screws—wood to wood		1.2	2.0	2.2	2.0	2.5
Screws—metal to wood		1.1	1.8	2.0	1.8	2.3
Lag bolts—wood to wood		1.4	2.5	3.0	2.5	3.3
Lag bolts—metal to wood		1.3	2.3	2.5	2.4	3.0
Machine bolts—wood to wood		1.3	3.0	3.5	3.3	3.9
Machine bolts—metal to wood		1.4	2.8	3.3	3.1	3.7
Split rings and shear plates		1.3	2.2	2.5	2.3	2.7

[a]Shear walls shall be permitted to be classified as secondary components or nonstructural components, subject to the limitations of Section 7.2.3.3. Acceptance criteria need not be considered for walls classified as secondary or nonstructural.
[b]Shear wall components with aspect ratios exceeding maximum listed values shall not be considered effective in resisting seismic forces.
[c]Linear interpolation shall be permitted for intermediate values of aspect ratio.
[d]For diaphragm components with aspect ratios between maximum listed values and 4.0, *m*-factors shall be decreased by linear interpolation between the listed values and 1.0. Diaphragm components with aspect ratios exceeding 4.0 shall not be considered effective in resisting seismic forces.
[e]Actions on connectors not listed in this table shall be considered force controlled.

Table 12-4. Modeling Parameters and Numerical Acceptance Criteria for Nonlinear Procedures—Wood Components

		Modeling Parameters			Acceptance Criteria		
					Acceptable Deformation Ratio Δ/Δ_y		
		Δ/Δ_y		Residual Strength Ratio	Performance Level		
		d	*e*	*c*	IO	LS	CP
Wood Frame Shear Walls[a]	*Height/Width Ratio (h/b)*						
Horizontal sheathing	≤1.0	4	5	0.3	1.8	4	5
Wood siding over horizontal sheathing	≤1.5	2.6	3.6	0.2	1.4	2.6	3.6
Diagonal sheathing	≤1.5	3.1	4	0.2	1.5	3.1	4
Wood siding over diagonal sheathing	≤2.0	2.3	3	0.2	1.3	2.3	3
Double diagonal sheathing	≤2.0	2	2.5	0.2	1.3	2	2.5
Vertical 1-in. × 10-in. sheathing	≤1.0	3.6	4	0.3	1.7	3.6	4
Wood structural panel sheathing or siding	≤3.5	4.5	5.5	0.3	1.9	4.5	5.5
Stucco on studs[b]	≤1.0	3.6	4	0.2	1.7	3.6	4
	2.0	2.5	3	0.2	1.4	2.5	3
Stucco over 1-in. × horizontal sheathing	≤2.0	3.5	4	0.2	1.6	3.5	4
Gypsum plaster on wood lath	≤2.0	4.6	5	0.2	1.9	4.6	5
Gypsum plaster on gypsum lath	≤2.0	5	6	0.2	2	5	6
Gypsum plaster on metal lath	≤2.0	4.4	5	0.2	1.9	4.4	5
Gypsum sheathing	≤2.0	5.7	6.3	0.2	2.2	5.7	6.3
Gypsum wallboard[b]	≤1.0	5.7	6.3	0.2	2.2	5.7	6.3
	2.0	4	5	0.2	1.8	4	5
Horizontal 1-in. × 6-in. sheathing with cut-in braces or diagonal blocking	≤1.0	4.4	5	0.2	1.9	4.4	5
Fiberboard or particleboard sheathing	≤1.5	3.8	4	0.2	1.7	3.8	4
Diaphragms[c]	*Length/Width Ratio (L/b)*						
Single straight sheathing, chorded	≤2.0	2.5	3.5	0.2	1.4	2.5	3.5
Single straight sheathing, unchorded	≤2.0	2	3	0.3	1.3	2	3
Double straight sheathing, chorded	≤2.0	2.5	3.5	0.2	1.4	2.5	3.5
Double straight sheathing, unchorded	≤2.0	2	3	0.3	1.3	2	3
Single diagonal sheathing, chorded	≤2.0	2.5	3.5	0.2	1.4	2.5	3.5
Single diagonal sheathing, unchorded	≤2.0	2	3	0.3	1.3	2	3
Straight sheathing over diagonal sheathing, chorded	≤2.0	3	4	0.2	1.5	3	4
Straight sheathing over diagonal sheathing, unchorded	≤2.0	2.5	3.5	0.3	1.4	2.5	3.5
Double diagonal sheathing, chorded	≤2.0	3	4	0.2	1.5	3	4
Double diagonal sheathing, unchorded	≤2.0	2.5	3.5	0.2	1.4	2.5	3.5
Wood structural panel, blocked, chorded[b]	≤3	4	5	0.3	1.8	4	5
	4	3	4	0.3	1.5	3	4
Wood structural panel, unblocked, chorded[b]	≤3	3	4	0.3	1.5	3	4
	4	2.5	3.5	0.3	1.4	2.5	3.5
Wood structural panel, blocked, unchorded[b]	≤2.5	3	4	0.3	1.5	3	4
	3.5	2.5	3.5	0.3	1.4	2.5	3.5
Wood structural panel, unblocked, unchorded[b]	≤2.5	2.5	3.5	0.4	1.4	2.5	3.5
	3.5	2	3	0.4	1.3	2	3
Wood structural panel overlay on sheathing, chorded[b]	≤3	3	4	0.3	1.5	3	4
	4	2.5	3.5	0.3	1.4	2.5	3.5
Wood structural panel overlay on sheathing, unchorded[b]	≤2.5	2.5	3.5	0.4	1.4	2.5	3.5
	3.5	2	3	0.4	1.3	2	3
Connections[d]							
Nails—Wood to wood		7	8	0.2	2.5	7	8
Nails—Metal to wood		5.5	7	0.2	2.1	5.5	7
Screws—Wood to wood		2.5	3	0.2	1.4	2.5	3
Screws—Wood to metal		2.3	2.8	0.2	1.3	2.3	2.8
Lag bolts—Wood to wood		2.8	3.2	0.2	1.5	2.8	3.2
Lag bolts—Metal to wood		2.5	3	0.2	1.4	2.5	3
Bolts—Wood to wood		3	3.5	0.2	1.5	3	3.5
Bolts—Metal to wood		2.8	3.3	0.2	1.5	2.8	3.3

[a]Shear wall components with aspect ratios exceeding maximum listed values shall not be considered effective in resisting seismic forces.
[b]Linear interpolation shall be permitted for intermediate values of aspect ratio.
[c]For diaphragm components with aspect ratios between maximum listed values and 4.0, deformation ratios shall be decreased by linear interpolation between the listed values and 1.0. Diaphragm components with aspect ratios exceeding 4.0 shall not be considered effective in resisting seismic forces.
[d]Actions on connectors not listed in this table shall be considered force controlled

these connections often determines the failure mode and the capacity of the assembly. Ductile connections with sufficient capacity give acceptable and expected performance (see Section 12.2.2.2.2).

12.4.4.2 Diagonal Lumber Sheathing Shear Walls

12.4.4.2.1 Stiffness of Diagonal Lumber Sheathing Shear Walls The deflection of diagonal lumber sheathed shear walls shall be determined using Eq. (12-1). Properties used to compute shear wall deflection and stiffness shall be based on Section 12.2.2.

C12.4.4.2.1 Stiffness of Diagonal Lumber Sheathing Shear Walls Diagonal lumber sheathed shear walls are stiffer and stronger than horizontal sheathed shear walls. They also provide greater stiffness for deflection control, and thereby greater damage control.

12.4.4.2.2 Strength of Diagonal Lumber Sheathing Shear Walls The expected strength of diagonal sheathing shall be determined in accordance with Section 12.2.2.

C12.4.4.2.2 Strength of Diagonal Lumber Sheathing Shear Walls The strength of diagonal sheathing is dependent on the width of the boards, the spacing of the studs, the size of nails, the number of nails per board, and the boundary conditions. Allowable capacities are listed for various configurations in AWC SDPWS and *Western Woods Use Book* (WWPA 1996).

12.4.4.2.3 Acceptance Criteria for Diagonal Lumber Sheathing Shear Walls For linear procedures, *m*-factors for use with deformation-controlled actions shall be taken from Table 12-3. For nonlinear procedures, the coordinates of the generalized force–deformation relation, described by Fig. 12-1, and deformation acceptance criteria for primary and secondary components shall be taken from Table 12-4.

12.4.4.2.4 Connections for Diagonal Lumber Sheathing Shear Walls The connections between parts of the shear wall assembly and other elements of the seismic-force-resisting system shall be considered in accordance with Section 12.4.1.

12.4.4.3 Vertical Wood Siding Shear Walls

12.4.4.3.1 Stiffness of Vertical Wood Siding Shear Walls The deflection of vertical wood siding shear walls shall be determined using Eq. (12-1). Properties used to compute shear wall deflection and stiffness shall be based on Section 12.2.2.

C12.4.4.3.1 Stiffness of Vertical Wood Siding Shear Walls Vertical wood siding has a very low seismic-force-resistance capacity and is very flexible. The strength and stiffness degrade with cyclic loading. These shear walls are suitable only where seismic forces are very low and deflection control is not needed.

12.4.4.3.2 Strength of Vertical Wood Siding Shear Walls The expected strength of vertical wood siding shear walls shall be determined in accordance with Section 12.2.2.

C12.4.4.3.2 Strength of Vertical Wood Siding Shear Walls The strength of vertical wood siding is dependent on the width of the boards; the spacing of the studs; the spacing of blocking; and the size, number, and spacing of the nails. The nail couple method described in the *Western Woods Use Book* (WWPA 1996) can be used to calculate the capacity of vertical wood siding in a manner similar to the method used for horizontal siding.

12.4.4.3.3 Acceptance Criteria for Vertical Wood Siding Shear Walls For linear procedures, *m*-factors for use with deformation-controlled actions shall be taken from Table 12-3. For nonlinear procedures, the coordinates of the generalized force–deformation relation, described by Fig. 12-1, and deformation acceptance criteria for primary and secondary components shall be taken from Table 12-4.

12.4.4.3.4 Connections of Vertical Wood Siding Shear Walls The presence of connections between parts of the vertical wood siding shear wall assembly and other elements of the seismic-force-resisting system shall be verified. If connections are present, they need not be considered in the analysis conducted in accordance with Chapter 7. In the absence of connections, connections shall be provided in accordance with Section 12.4.1.

C12.4.4.3.4 Connections of Vertical Wood Siding Shear Walls The load capacity of the vertical siding is low, which makes the capacity of connections between the shear wall and the other elements of less concern (see Section 12.2.2.2.2).

12.4.4.4 Wood Siding over Horizontal Sheathing Shear Walls

12.4.4.4.1 Stiffness of Wood Siding over Horizontal Sheathing Shear Walls The deflection of wood siding over horizontal sheathing shear walls shall be determined using Eq. (12-1). Properties used to compute shear wall deflection and stiffness shall be based on Section 12.2.2.

C12.4.4.4.1 Stiffness of Wood Siding over Horizontal Sheathing Shear Walls Double-layer horizontal sheathed shear walls are stiffer and stronger than single-layer horizontal sheathed shear walls. These shear walls are often suitable for resisting seismic forces that are low to moderate in magnitude. They also provide greater stiffness for deflection control and, thereby, greater damage control.

12.4.4.4.2 Strength of Wood Siding over Horizontal Sheathing Shear Walls The expected strength of wood siding over horizontal sheathing shall be determined in accordance with Section 12.2.2.

C12.4.4.4.2 Strength of Wood Siding over Horizontal Sheathing Shear Walls This capacity is dependent on the width of the boards; the spacing of the studs; the size, number, and spacing of the nails; and the location of joints.

12.4.4.4.3 Acceptance Criteria for Wood Siding over Horizontal Sheathing Shear Walls For linear procedures, *m*-factors for use with deformation-controlled actions shall be taken from Table 12-3. For nonlinear procedures, the coordinates of the generalized force–deformation relation, described by Fig. 12-1, and deformation acceptance criteria for primary and secondary components shall be taken from Table 12-4.

12.4.4.4.4 Connections of Wood Siding over Horizontal Sheathing Shear Walls The connections between parts of the shear wall assembly and other elements of the seismic-force-resisting system shall be considered in accordance with Section 12.4.1.

12.4.4.5 Wood Siding over Diagonal Sheathing Shear Walls

12.4.4.5.1 Stiffness of Wood Siding over Diagonal Sheathing Shear Walls The deflection of these shear walls shall be calculated in accordance with Eq. (12-1). Properties used to compute shear wall deflection and stiffness shall be based on Section 12.2.2.

C12.4.4.5.1 Stiffness of Wood Siding over Diagonal Sheathing Shear Walls Horizontal wood siding over diagonal sheathing provides stiff, strong shear walls. These shear walls are often suitable for resisting seismic forces that are moderate in magnitude. They also provide good stiffness for deflection control and damage control.

12.4.4.5.2 Strength of Wood Siding over Diagonal Sheathing Shear Walls The expected strength of wood siding over diagonal sheathing shall be determined in accordance with Section 12.2.2.

C12.4.4.5.2 Strength of Wood Siding over Diagonal Sheathing Shear Walls The capacity of wood siding over diagonal sheathing is dependent on the width of the boards; the spacing of the studs; the size, number, and spacing of the nails; the location of joints; and the boundary conditions.

12.4.4.5.3 Acceptance Criteria for Wood Siding over Diagonal Sheathing Shear Walls For linear procedures, *m*-factors for use with deformation-controlled actions shall be taken from Table 12-3. For nonlinear procedures, the coordinates of the generalized force–deformation relation, described by Fig. 12-1, and deformation acceptance criteria for primary and secondary components shall be taken from Table 12-4.

12.4.4.5.4 Connections of Wood Siding over Diagonal Sheathing Shear Walls The connections between parts of the shear wall assembly and other elements of the seismic-force-resisting system shall be considered in accordance with Section 12.4.1.

12.4.4.6 Wood Structural Panel Sheathing or Siding Shear Walls

12.4.4.6.1 Stiffness of Wood Structural Panel Sheathing or Siding Shear Walls The deflection of wood structural shear walls at yield shall be determined using Eq. (12-2):

$$\Delta_y = 8v_y h^3/(EAb) + v_y h/(Gt) + 0.75he_n + (h/b)d_a \quad (12\text{-}2)$$

where v_y = shear at yield in the direction under consideration (lb/ft);
h = shear wall height (ft);
E = modulus of elasticity of boundary member (lb/in.^{2});
A = area of boundary member cross section (in.^{2});
b = shear wall width (ft);
G = modulus of rigidity of wood structural panel (lb/in.^{2});
t = effective thickness of wood structural panel (in.);
d_a = deflection at yield of tie-down anchorage or deflection at load level to anchorage at end of wall, determined by anchorage details and dead load (in.); and
e_n = nail deformation at yield load per nail (in.). Values listed are for Structural I panels; multiply by 1.2 for all other panel grades;
= 0.13 for 6d nails at yield;
= 0.08 for 8d nails at yield;
= 0.08 for 10d nails at yield.

Properties used to compute shear wall deflection and stiffness shall be based on Section 12.2.2.

C12.4.4.6.1 Stiffness of Wood Structural Panel Sheathing or Siding Shear Walls The response of wood structural panel shear walls is dependent on the thickness of the wood structural panels, the height-to-width (*h*/*b*) ratio, the nailing pattern, and other factors. Values for modulus of rigidity, *G*, and effective thickness, *t*, for various sheathing materials are contained in *Design Capacities of APA Performance Rated Structural-Use Panels* (APA 1995), *Plywood Design Specification* (APA 1997), and AWC (2008) Commentary.

12.4.4.6.2 Strength of Wood Structural Panel Sheathing or Siding Shear Walls The expected strength of wood structural panel shear walls shall be taken as mean maximum strengths obtained experimentally. Expected strengths of wood structural panel shear walls shall be permitted to be based on 1.5 times yield strengths. Yield strengths shall be determined using LRFD procedures contained in AWC SDPWS, except that the resistance factor, ϕ, shall be taken as 1.0 and expected material properties shall be determined in accordance with Section 12.2.2.

Conversion from tabulated allowable stress values in accordance with Section 12.2.2.5.1 shall not be permitted for wood structural panel shear walls, but approved allowable stress values for fasteners shall be permitted to be converted in accordance with Section 12.2.2.5.1 where the strength of a shear wall is computed using principles of mechanics.

C12.4.4.6.2 Strength of Wood Structural Panel Sheathing or Siding Shear Walls Shear capacities of wood structural panel shear walls are primarily dependent on the nailing at the plywood panel edges and the thickness and grade of the plywood.

Yield strengths for seismic design are tabulated in AWC SDPWS for various configurations of shear wall construction.

A method for calculating the capacity of wood structural shear walls based on accepted nail values is provided in Tissell (1993). For this method, use LRFD-based fastener strengths. Because of the differences in load-duration and time-effect factors between the allowable stress and LRFD formats, direct conversion of shear wall tables using the method outlined in Section 12.2.2.5.1 is not permitted. However, the tabulated AWC SDPWS yield strengths for seismic design of shear walls (i.e., LRFD design values, with ϕ = 1.0), are 2.0 times the associated allowable stress design values.

12.4.4.6.3 Acceptance Criteria for Wood Structural Panel Sheathing or Siding Shear Walls For linear procedures, *m*-factors for use with deformation-controlled actions shall be taken from Table 12-3. For nonlinear procedures, the coordinates of the generalized force–deformation relation, described in Eq. (12-1), and deformation acceptance criteria for primary and secondary components shall be taken from Table 12-4.

12.4.4.6.4 Connections of Wood Structural Panel Sheathing or Siding Shear Walls The connections between parts of the shear wall assembly and other elements of the seismic-force-resisting system shall be considered in accordance with Section 12.4.1.

12.4.4.7 Stucco on Studs, Sheathing, or Fiberboard Shear Walls

12.4.4.7.1 Stiffness of Stucco on Studs, Sheathing, or Fiberboard Shear Walls The deflection of stucco on studs, sheathing, or fiberboard shear walls shall be determined using Eq. (12-1). Properties used to compute shear wall deflection and stiffness shall be based on Section 12.2.2.

C12.4.4.7.1 Stiffness of Stucco on Studs, Sheathing, or Fiberboard Shear Walls Stucco is brittle, and the seismic-force-resisting capacity of stucco shear walls is low. The walls are stiff until cracking occurs, but the strength and stiffness degrade under cyclic loading. These shear walls are suitable only where seismic forces are low.

12.4.4.7.2 Strength of Stucco on Studs, Sheathing, or Fiberboard Shear Walls The expected strength of stucco on studs, sheathing, or fiberboard shall be determined in accordance with Section 12.2.2.

C12.4.4.7.2 Strength of Stucco on Studs, Sheathing, or Fiberboard Shear Walls This capacity is dependent on the attachment of the stucco netting to the studs and the embedment of the netting in the stucco.

12.4.4.7.3 Acceptance Criteria for Stucco on Studs, Sheathing, or Fiberboard Shear Walls For linear procedures, *m*-factors for

use with deformation-controlled actions shall be taken from Table 12-3. For nonlinear procedures, the coordinates of the generalized force–deformation relation, described by Fig. 12-1, and deformation acceptance criteria for primary and secondary components shall be taken from Table 12-4.

12.4.4.7.4 Connections of Stucco on Studs, Sheathing, or Fiberboard Shear Walls The connection between the stucco netting and the framing shall be investigated. The connections between the shear wall and foundation, and between the shear wall and other elements of the seismic-force-resisting system, shall be considered in accordance with Section 12.4.1.

C12.4.4.7.4 Connections of Stucco on Studs, Sheathing, or Fiberboard Shear Walls Of less concern is the connection of the stucco to the netting. Unlike plywood, the tensile capacity of the stucco material (Portland cement), rather than the connections, often governs failure. See Section 12.2.2.2.2.

12.4.4.8 Gypsum Plaster on Wood Lath Shear Walls

12.4.4.8.1 Stiffness of Gypsum Plaster on Wood Lath Shear Walls The deflection of gypsum plaster on wood lath shear walls shall be determined using Eq. (12-1). Properties used to compute shear wall deflection and stiffness shall be based on Section 12.2.2.

C12.4.4.8.1 Stiffness of Gypsum Plaster on Wood Lath Shear Walls Gypsum plaster shear walls are similar to stucco, except their strength is lower. As is the case for stucco, the walls are stiff until failure, but the strength and stiffness degrade under cyclic loading. These shear walls are suitable only where seismic forces are very low.

12.4.4.8.2 Strength of Gypsum Plaster on Wood Lath Shear Walls The expected strength of gypsum plaster shall be determined in accordance with Section 12.2.2.

12.4.4.8.3 Acceptance Criteria for Gypsum Plaster on Wood Lath Shear Walls For linear procedures, *m*-factors for use with deformation-controlled actions shall be taken from Table 12-3. For nonlinear procedures, the coordinates of the generalized force–deformation relation, described by Fig. 12-1, and deformation acceptance criteria for primary and secondary components shall be taken from Table 12-4.

12.4.4.8.4 Connections of Gypsum Plaster on Wood Lath Shear Walls The presence of connections between parts of the shear wall assembly and other elements of the seismic-force-resisting system shall be verified. If connections are absent, they shall be provided in accordance with Section 12.4.1.

C12.4.4.8.4 Connections of Gypsum Plaster on Wood Lath Shear Walls The tensile and bearing capacity of the plaster, rather than the connections, often govern failure. The relatively low strength of this material makes connections between parts of the shear wall assembly and the other elements of the seismic-force-resisting system of less concern.

12.4.4.9 Gypsum Plaster on Gypsum Lath Shear Walls

12.4.4.9.1 Stiffness of Gypsum Plaster on Gypsum Lath Shear Walls The deflection of gypsum plaster on gypsum lath shear walls shall be determined using Eq. (12-1). Properties used to compute shear wall deflection and stiffness shall be based on Section 12.2.2.

C12.4.4.9.1 Stiffness of Gypsum Plaster on Gypsum Lath Shear Walls Gypsum plaster on gypsum lath is similar to gypsum wallboard (see Section 12.4.4.11).

12.4.4.9.2 Strength of Gypsum Plaster on Gypsum Lath Shear Walls The expected strength of gypsum plaster on gypsum lath shear walls shall be determined in accordance with Section 12.2.2.

12.4.4.9.3 Acceptance Criteria for Gypsum Plaster on Gypsum Lath Shear Walls For linear procedures, *m*-factors for use with deformation-controlled actions shall be taken from Table 12-3. For nonlinear procedures, the coordinates of the generalized force–deformation relation, described by Fig. 12-1, and deformation acceptance criteria for primary and secondary components shall be taken from Table 12-4.

12.4.4.9.4 Connections of Gypsum Plaster on Gypsum Lath Shear Walls The presence of connections between parts of the shear wall assembly and other elements of the seismic-force-resisting system shall be verified. If connections are present, they need not be considered in the analysis conducted in accordance with Chapter 7. If connections are absent, they shall be provided in accordance with Section 12.4.1.

C12.4.4.9.4 Connections of Gypsum Plaster on Gypsum Lath Shear Walls The tensile and bearing capacity of the plaster, rather than the connections, often govern failure. The relatively low strength of this material makes connections between parts of the shear wall assembly and the other elements of the seismic-force-resisting system of less concern.

12.4.4.10 Gypsum Wallboard or Drywall Shear Walls

12.4.4.10.1 Stiffness of Gypsum Wallboard or Drywall Shear Walls The deflection of gypsum wallboard shear walls shall be determined using Eq. (12-1). Properties used to compute shear wall deflection and stiffness shall be based on Section 12.2.2.

C12.4.4.10.1 Stiffness of Gypsum Wallboard or Drywall Shear Walls Gypsum wallboard has a very low seismic-force-resisting capacity but is relatively stiff until cracking occurs. The strength and stiffness degrade under cyclic loading. These shear walls are suitable only where seismic forces are very low.

12.4.4.10.2 Strength of Gypsum Wallboard or Drywall Shear Walls The expected strength of gypsum wallboard shear walls shall be determined in accordance with Section 12.2.2.

C12.4.4.10.2 Strength of Gypsum Wallboard or Drywall Shear Walls The default capacity listed in Table 12-1 is for typical 7-in. nail spacing of 1/2-in.- or 5/8-in.-thick panels with 4d or 5d nails. Higher capacities can be used if closer nail spacing, multilayers of gypsum board, and/or the presence of blocking at all panel edges is verified.

12.4.4.10.3 Acceptance Criteria for Gypsum Wallboard or Drywall Shear Walls For linear procedures, *m*-factors for use with deformation-controlled actions shall be taken from Table 12-3. For nonlinear procedures, the coordinates of the generalized force–deformation relation, described by Fig. 12-1, and deformation acceptance criteria for primary and secondary components shall be taken from Table 12-4.

12.4.4.10.4 Connections of Gypsum Wallboard or Drywall Shear Walls The connections between parts of the shear wall assembly and other elements of the seismic-force-resisting system shall be considered in accordance with Section 12.4.1.

12.4.4.11 Gypsum Sheathing Shear Walls

12.4.4.11.1 Stiffness of Gypsum Sheathing Shear Walls The deflection of gypsum sheathed shear walls shall be determined

using Eq. (12-1). Properties used to compute shear wall deflection and stiffness shall be based on Section 12.2.2.

C12.4.4.11.1 Stiffness of Gypsum Sheathing Shear Walls Gypsum sheathing is similar to gypsum wallboard (see Section 12.4.4.10.1).

12.4.4.11.2 Strength of Gypsum Sheathing Shear Walls The expected strength of gypsum wallboard shear walls shall be determined in accordance with Section 12.2.2.

C12.4.4.11.2 Strength of Gypsum Sheathing Shear Walls The default capacity listed in Table 12-1 is based on typical 7-in. nail spacing of 1/2-in.- or 5/8-in.-thick panels with 4d or 5d nails. Higher capacities can be used if closer nail spacing, multilayers of gypsum board, and/or the presence of blocking at all panel edges is verified.

12.4.4.11.3 Acceptance Criteria for Gypsum Sheathing Shear Walls For linear procedures, *m*-factors for use with deformation-controlled actions shall be taken from Table 12-3. For nonlinear procedures, the coordinates of the generalized force–deformation relation, described by Fig. 12-1, and deformation acceptance criteria for primary and secondary components shall be taken from Table 12-4.

12.4.4.11.4 Connections of Gypsum Sheathing Shear Walls The connections between parts of the shear wall assembly and other elements of the seismic-force-resisting system shall be considered in accordance with Section 12.4.1.

12.4.4.12 Plaster on Metal Lath Shear Walls

12.4.4.12.1 Stiffness of Plaster on Metal Lath Shear Walls The deflection of plaster on metal lath shear walls shall be determined using Eq. (12-1). Properties used to compute shear wall deflection and stiffness shall be based on Section 12.2.2.

C12.4.4.12.1 Stiffness of Plaster on Metal Lath Shear Walls Plaster on metal lath is similar to plaster on wood lath, and the seismic-force-resisting capacity of these shear walls is low. The walls are stiff until cracking occurs, but the strength and stiffness degrade under cyclic loading. These shear walls are suitable only where seismic forces are low.

12.4.4.12.2 Strength of Plaster on Metal Lath Shear Walls The expected strength of plaster on metal lath shear walls shall be determined in accordance with Section 12.2.2.

12.4.4.12.3 Acceptance Criteria for Plaster on Metal Lath Shear Walls For linear procedures, *m*-factors for use with deformation-controlled actions shall be taken from Table 12-3. For nonlinear procedures, the coordinates of the generalized force–deformation relation, described by Fig. 12-1, and deformation acceptance criteria for primary and secondary components shall be taken from Table 12-4.

12.4.4.12.4 Connections of Plaster on Metal Lath Shear Walls The presence of connections between parts of the shear wall assembly and other elements of the seismic-force-resisting system shall be verified. If connections are present, they need not be considered in the analysis conducted in accordance with Chapter 7. If connections are absent, they shall be provided in accordance with Section 12.4.1.

C12.4.4.12.4 Connections of Plaster on Metal Lath Shear Walls The tensile and bearing capacity of the plaster, rather than the connections, often govern failure. The relatively low strength of this material makes connections between parts of the shear wall assembly and the other elements of the seismic-force-resisting system of less concern.

12.4.4.13 Horizontal Lumber Sheathing with Cut-In Braces or Diagonal Blocking Shear Walls

12.4.4.13.1 Stiffness of Horizontal Lumber Sheathing with Cut-In Braces or Diagonal Blocking Shear Walls The deflection of horizontal lumber sheathing with cut-in braces or diagonal blocking shear walls shall be calculated using Eq. (12-1). Properties used to compute shear wall deflection and stiffness shall be based on Section 12.2.2.

C12.4.4.13.1 Stiffness of Horizontal Lumber Sheathing with Cut-In Braces or Diagonal Blocking Shear Walls This assembly is similar to horizontal sheathing without braces, except that the cut-in braces or diagonal blocking provide higher stiffness at initial loads. After the braces or blocking fail (at low loads), the behavior of the wall is the same as with horizontal sheathing without braces. The strength and stiffness degrade under cyclic loading.

12.4.4.13.2 Strength of Horizontal Lumber Sheathing with Cut-In Braces or Diagonal Blocking Shear Walls The expected strength of horizontal sheathing or siding shall be determined in accordance with Section 12.2.2.

12.4.4.13.3 Acceptance Criteria for Horizontal Lumber Sheathing with Cut-In Braces or Diagonal Blocking Shear Walls For linear procedures, *m*-factors for use with deformation-controlled actions shall be taken from Table 12-3. For nonlinear procedures, the coordinates of the generalized force–deformation relation, described by Fig. 12-1, and deformation acceptance criteria for primary and secondary components shall be taken from Table 12-4.

12.4.4.13.4 Connections of Horizontal Lumber Sheathing with Cut-In Braces or Diagonal Blocking Shear Walls The connections between the parts of the shear wall assembly and other elements of the seismic-force-resisting system shall be considered in accordance with Section 12.4.1.

C12.4.4.13.4 Connections of Horizontal Lumber Sheathing with Cut-In Braces or Diagonal Blocking Shear Walls The capacity and ductility of these connections often determine the failure mode and the capacity of the assembly. Ductile connections with sufficient capacity give acceptable performance (see Section 12.2.2.2.2).

12.4.4.14 Fiberboard or Particleboard Sheathing Shear Walls

12.4.4.14.1 Stiffness of Fiberboard or Particleboard Sheathing Shear Walls For structural particleboard sheathing, see Section 12.4.4.6. The deflection of shear walls sheathed in nonstructural particleboard shall be determined using Eq. (12-1). Properties used to compute shear wall deflection and stiffness shall be based on Section 12.2.2. Fiberboard sheathing shall not be considered a structural element for resisting seismic loads.

C12.4.4.14.1 Stiffness of Fiberboard or Particleboard Sheathing Shear Walls Fiberboard sheathing is very weak, lacks stiffness, and is unable to resist lateral forces. Particleboard comes in two varieties: One is similar to structural panels, the other (nonstructural) is slightly stronger than gypsum board but more brittle. Nonstructural particleboard should only be used where seismic forces are very low.

12.4.4.14.2 Strength of Fiberboard or Particleboard Sheathing Shear Walls The expected strength of structural particleboard shall be based on Section 12.4.4.6. The strength of nonstructural fiberboard or particleboard sheathed walls shall be determined in accordance with Section 12.2.2.

C12.4.4.14.2 Strength of Fiberboard or Particleboard Sheathing Shear Walls Fiberboard has very low strength and is therefore not considered a structural element for resisting seismic loads.

12.4.4.14.3 Acceptance Criteria for Fiberboard or Particleboard Sheathing Shear Walls For linear procedures, *m*-factors for use with deformation-controlled actions shall be taken from Table 12-3. For nonlinear procedures, the coordinates of the generalized force–deformation relation, described by Fig. 12-1, and deformation acceptance criteria for primary and secondary components shall be taken from Table 12-4.

12.4.4.14.4 Connections of Fiberboard or Particleboard Sheathing Shear Walls The connections between parts of structural particleboard shear wall assemblies and other elements of the seismic-force-resisting system shall be considered in accordance with Section 12.4.1.

The presence of connections between parts of nonstructural particleboard shear wall assemblies and other elements of the seismic-force-resisting system shall be verified. If connections are present, they need not be considered in the analysis conducted in accordance with Chapter 7. If connections are absent, they shall be provided in accordance with Section 12.4.1.

C12.4.4.14.4 Connections of Fiberboard or Particleboard Sheathing Shear Walls The capacity and ductility of the connections in structural particleboard shear walls often determine the failure mode and the capacity of the assembly. Ductile connections with sufficient capacity give acceptable performance. The tensile and bearing capacity of the nonstructural particleboard, rather than the connections, often govern failure. The relatively low strength of this material makes connections between parts of the shear wall assembly and the other elements of the seismic-force-resisting system of less concern.

12.4.5 Stiffness, Strength, Acceptance Criteria, and Connection Design for CFS Light-Frame Shear Walls

12.4.5.1 Plaster on Metal Lath Shear Walls

12.4.5.1.1 Stiffness of Plaster on Metal Lath Shear Walls The deflection of plaster on metal lath shear walls shall be determined using Eq. (12-1). Properties used to compute shear wall deflection and stiffness shall be based on Section 12.2.2.

12.4.5.1.2 Strength of Plaster on Metal Lath Shear Walls The expected strength of plaster on metal lath shear walls shall be determined in accordance with Section 12.2.2.

12.4.5.1.3 Acceptance Criteria for Plaster on Metal Lath Shear Walls For linear procedures, *m*-factors for use with deformation-controlled actions shall be taken from Table 12-3. For nonlinear procedures, the coordinates of the generalized force–deformation relation, described by Fig. 12-1, and deformation acceptance criteria for primary and secondary components shall be taken from Table 12-4.

12.4.5.1.4 Connections of Plaster on Metal Lath Shear Walls The presence of connections between parts of the shear wall assembly and other elements of the seismic-force-resisting system shall be verified. If connections are present, they need not be considered in the analysis conducted in accordance with Chapter 7. If connections are absent, they shall be provided in accordance with Section 12.4.1.

12.4.5.2 Wood Structural Panels

12.4.5.2.1 Stiffness of Wood Structural Panels The deflection of wood structural panel shear walls shall be determined in accordance with AISI S213. Properties used to compute shear wall deflection and stiffness shall be based on Section 12.2.2.

12.4.5.2.2 Strength of Wood Structural Panels The expected strength of wood structural panel shear walls shall be taken as mean maximum strengths obtained experimentally. Expected strengths of wood structural panel shear walls shall be permitted to be based on strengths determined using LRFD procedures contained in AISI S213, except that the resistance factor, ϕ, shall be taken as 1.0 and expected material properties shall be determined in accordance with Section 12.2.2. The expected strength values of fasteners shall be calculated in accordance with Section 12.2.2.5, based on approved data.

The expected strength of the wood structural panel shear wall shall be permitted to be determined from expected strength of fasteners in accordance with Section 12.2.2.5 where the strength of the shear wall is computed using principles of mechanics.

12.4.5.2.3 Acceptance Criteria for Wood Structural Panels For linear procedures, *m*-factors for use with deformation-controlled actions shall be derived from experimental data. For nonlinear procedures, the nonlinear force–deformation relation shall be based on experimental evidence or parameters derived in accordance with the generalized force–deformation relation, described by Fig. 12-1.

C12.4.5.2.3 Acceptance Criteria for Wood Structural Panels The strength and deformation response of CFS light-frame wood structural panel shear walls is dependent on the thickness of the wood structural panels, the height-to-width (*h*/*b*) ratio, the screw pattern, framing thickness, steel grade, and other factors in accordance with provisions contained in AISI S213. To coordinate with the strength and deformation response of CFS light-frame wood structural panel shear walls in accordance with AISI S213 , it is the intent of this standard to recommend that *m*-factors and other modeling parameters be developed directly from evaluation of CFS light-frame shear wall test data. Interchangeability of *m*-factors and modeling parameters between wood frame and CFS light-frame shear walls should not be assumed. For example, parameters derived from CFS light-frame shear wall test data should not be extended to wood frame shear walls, and default values for wood frame shear walls should not be extended to CFS light-frame shear walls.

12.4.5.2.4 Connections of Wood Structural Panels The connections between parts of the shear wall assembly and other elements of the seismic-force-resisting system shall be considered in accordance with Section 12.4.1.

12.4.5.3 Gypsum Board Shear Walls

12.4.5.3.1 Stiffness of Gypsum Board Shear Walls The deflection of gypsum board shear walls shall be determined using Eq. (12-1). Properties used to compute shear wall deflection and stiffness shall be based on Section 12.2.2.

12.4.5.3.2 Strength of Gypsum Board Shear Walls The expected strength of gypsum board shear walls shall be determined in accordance with Section 12.2.2.

12.4.5.3.3 Acceptance Criteria for Gypsum Board Shear Walls For linear procedures, *m*-factors for use with deformation-controlled actions shall be derived from experimental data. For nonlinear procedures, the nonlinear force–deformation relation shall be based on experimental evidence or parameters derived in accordance with the generalized force–deformation relation, described by Fig. 12-1.

12.4.5.3.4 Connections of Gypsum Board Shear Walls The connections between parts of the shear wall assembly and other elements of the seismic-force-resisting system shall be considered in accordance with Section 12.4.1.

12.5 WOOD DIAPHRAGMS

12.5.1 General The expected strength of wood diaphragm assemblies, Q_{CE}, shall be determined in accordance with Sections 12.5.3.1 to 12.5.3.8. The expected strength, Q_{CE}, of braced horizontal diaphragm systems shall be determined in accordance with Section 12.5.3.9.

The effects of openings in wood diaphragms shall be considered. Chords and collectors shall be added to provide sufficient load capacity around openings to meet the strength requirements for the diaphragm or analysis performed to demonstrate adequacy of the diaphragm without chords and collectors.

Connections between diaphragms and other components, including shear walls, diaphragm ties, collectors, cross ties, and out-of-plane anchors, shall be considered in accordance with Section 12.3.3 and shall be designed for forces calculated in accordance with Chapter 7.

C12.5.1 General The behavior of horizontal wood diaphragms is influenced by the type of sheathing, size and amount of fasteners, existence of perimeter chord or flange members, and the ratio of span length to width of the diaphragm.

The presence of any but small openings in wood diaphragms causes a reduction in the stiffness and strength of the diaphragm because of a reduced length of diaphragm available to resist seismic forces. Special analysis techniques and detailing are required at the openings. The presence or addition of chord members around the openings reduces the loss in stiffness of the diaphragm and limits damage in the area of the openings. See *Guidelines for the Design of Horizontal Wood Diaphragms*, ATC-7 (1981) and Tissell and Elliott (1997) for a discussion of the effects of openings in wood diaphragms.

The presence of chords at the perimeter of a diaphragm significantly reduces the diaphragm deflection caused by bending and increases the stiffness of the diaphragm over that of an unchorded diaphragm. However, the increase in stiffness caused by chords in a single straight-sheathed diaphragm is minimal because of the flexible nature of these diaphragms.

12.5.2 Types of Wood Diaphragms

12.5.2.1 Existing Wood Diaphragms

12.5.2.1.1 Single Straight Sheathing Single straight-sheathed diaphragms shall include diaphragms with sheathing laid perpendicular to the framing members.

C12.5.2.1.1 Single Straight Sheathing Typically, single straight-sheathed diaphragms consist of 1-in. sheathing laid perpendicular to the framing members; 2-in. or 3-in. sheathing may also be present. The sheathing serves the dual purpose of supporting gravity loads and resisting shear forces in the diaphragm. Most often, 1-in. sheathing is nailed with 8d or 10d nails, with two or more nails per sheathing board at each support. Shear forces perpendicular to the direction of the sheathing are resisted by the nail couple. Shear forces parallel to the direction of the sheathing are transferred through the nails in the supporting joists or framing members below the sheathing joints.

12.5.2.1.2 Double Straight Sheathing Double straight-sheathed diaphragms shall include diaphragms with one layer of sheathing laid perpendicular to the framing members and a second layer of sheathing laid either perpendicular or parallel to the first layer, where both layers of sheathing are fastened to the framing members.

C12.5.2.1.2 Double Straight Sheathing Construction of double straight-sheathed diaphragms is the same as that for single straight-sheathed diaphragms, except that an upper layer of straight sheathing is laid over the lower layer of sheathing. The upper sheathing can be placed either perpendicular or parallel to the lower layer of sheathing. If the upper layer of sheathing is parallel to the lower layer, the board joints are usually offset sufficiently that nails at joints in the upper layer of sheathing are driven into a common sheathing board below, with sufficient edge distance. The upper layer of sheathing is nailed to the framing members through the lower layer of sheathing.

12.5.2.1.3 Single Diagonal Sheathing Single diagonally sheathed diaphragms shall include diaphragms with sheathing laid at approximately a 45-degree angle and connected to the framing members.

C12.5.2.1.3 Single Diagonal Sheathing Typically, 1-in. sheathing is laid at an approximate 45-degree angle to the framing members. In some cases, 2-in. sheathing may also be used. The sheathing supports gravity loads and resists shear forces in the diaphragm. Commonly, 1-in. sheathing is nailed with 8d nails, with two or more nails per board at each support. The recommended nailing for diagonally sheathed diaphragms is published in *Western Woods Use Book* (WWPA 1996) and AWC SDPWS. The shear capacity of the diaphragm is dependent on the size and quantity of the nails at each sheathing board.

12.5.2.1.4 Diagonal Sheathing with Straight Sheathing or Flooring Above Diagonal sheathing with straight sheathing or flooring above shall include diaphragms with sheathing laid at a 45-degree angle to the framing members, with a second layer of straight sheathing or wood flooring laid on top of the diagonal sheathing at a 90-degree angle to the framing members.

C12.5.2.1.4 Diagonal Sheathing with Straight Sheathing or Flooring Above Typically, these constructions consist of a lower layer of 1-in. diagonal sheathing laid at a 45-degree angle to the framing members, with a second layer of straight sheathing or wood flooring laid on top of the diagonal sheathing at a 90-degree angle to the framing members. Both layers of sheathing support gravity loads and resist shear forces in the diaphragm. Sheathing boards are commonly connected with two or more 8d nails per board at each support.

12.5.2.1.5 Double Diagonal Sheathing Double diagonally sheathed diaphragms shall include diaphragms with one layer of sheathing laid at a 45-degree angle to the framing members and a second layer of sheathing laid at a 90-degree angle to the first layer.

C12.5.2.1.5 Double Diagonal Sheathing Typically, double diagonally sheathed diaphragms consist of a lower layer of 1-in. diagonal sheathing with a second layer of 1-in. diagonal sheathing laid at a 90-degree angle to the lower layer. The sheathing supports gravity loads and resists shear forces in the diaphragm. The sheathing is commonly nailed with 8d nails, with two or more nails per board at each support. The recommended nailing for double diagonally sheathed diaphragms is published in *Western Woods Use Book* (WWPA 1996) and AWC SDPWS.

12.5.2.1.6 Wood Structural Panel Sheathing Wood structural panel-sheathed diaphragms shall include diaphragms with wood structural panels, or other wood structural panels as defined in this standard, fastened to the framing members.

C12.5.2.1.6 Wood Structural Panel Sheathing Typically, these constructions consist of wood structural panels, such as wood structural panel or oriented strand board, placed on framing members and nailed in place. Different grades and thicknesses of wood structural panels are commonly used, depending on requirements for gravity load support and shear capacity. Edges at the ends of the wood structural panels are usually supported by the framing members. Edges at the sides of the panels can be blocked or unblocked. In some cases, tongue and groove wood structural panels are used. Nailing patterns and nail size can vary greatly. Nail spacing is commonly in the range of 3 to 6 in. on center at the supported and blocked edges of the panels, and 10 to 12 in. on center at the panel infield. Staples are sometimes used to attach the wood structural panels.

12.5.2.1.7 Braced Horizontal Diaphragms Braced horizontal diaphragms shall include diaphragms with a horizontal truss system at the floor or roof level of the building.

C12.5.2.1.7 Braced Horizontal Diaphragms Typically, these constructions consist of "X" rod bracing and wood struts forming a horizontal truss system at the floor or roof levels of the building. The "X" bracing usually consists of steel rods drawn taut by turnbuckles or nuts. The struts usually consist of wood members, which may or may not be part of the gravity-load-bearing system of the floor or roof. The steel rods function as tension members in the horizontal truss, and the struts function as compression members. Truss chords (similar to diaphragm chords) are needed to resist bending in the horizontal truss system.

12.5.2.2 Enhanced Wood Diaphragms Enhanced wood diaphragms shall include existing diaphragms retrofitted in accordance with the standard or by an approved method.

C12.5.2.2 Enhanced Wood Diaphragms Possible retrofit methods for wood diaphragms include the following:

Wood Structural Panel Overlays on Straight or Diagonal Sheathing Existing sheathed diaphragms may be overlaid with new wood structural panels. Nails or staples may be used to connect the new structural panels to the existing diaphragms. Nails should be of sufficient length to provide the required embedment into framing members below the sheathing.

These diaphragms typically consist of new wood structural panels placed over existing straight or diagonal sheathing and nailed or stapled to the existing framing members through the existing sheathing. If the new overlay is nailed to the existing framing members only—without nailing at the panel edges perpendicular to the framing—the response of the new overlay is similar to that of an unblocked wood structural panel diaphragm.

If a stronger and stiffer diaphragm is desired, the joints of the new wood structural panel overlay should be placed parallel to the joints of the existing sheathing, with the overlay nailed or stapled to the existing sheathing. The edges of the new wood structural panels should be offset from the joints in the existing sheathing below by a sufficient distance that the new nails may be driven into the existing sheathing without splitting the sheathing. If the new panels are nailed at all edges as described above, the response of the new overlay is similar to that of a blocked wood structural panel diaphragm. As an alternative, new blocking may be installed below all panel joints perpendicular to the existing framing members.

Because the joints of the overlay and the joints of the existing sheathing may not be offset consistently without cutting the panels, it may be advantageous to place the wood structural panel overlay at a 45-degree angle to the existing sheathing. If the existing diaphragm is straight sheathed, the new overlay should be placed at a 45-degree angle to the existing sheathing and joists. If the existing diaphragm is diagonally sheathed, the new wood structural panel overlay should be placed perpendicular to the existing joists at a 45-degree angle to the diagonal sheathing. Nails should be driven into the existing sheathing with sufficient edge distance to prevent splitting of the existing sheathing. At boundaries, nails should be of sufficient length to penetrate the sheathing into the framing below. New structural panel overlays shall be connected to shear walls or vertical bracing elements to ensure the effectiveness of the added panel.

Care should be exercised where placing new wood structural panel overlays on existing diaphragms. The changes in stiffness and dynamic characteristics of the diaphragm may have negative effects by causing increased forces in other components or elements. The increased stiffness and the associated increase in dynamic forces may not be desirable in some diaphragms for certain Performance Levels.

Wood Structural Panel Overlays on Existing Wood Structural Panels Existing wood structural panel diaphragms may be overlaid with new wood structural panels. Panel joints should be offset, or the overlay should be placed at a 45-degree angle to the existing wood structural panels.

The placement of a new overlay over an existing diaphragm should follow the same construction methods and procedures as those used for straight-sheathed and diagonally sheathed diaphragms (see Section C12.5.3.7).

Increased Attachment The nailing or attachment of the existing sheathing to the supporting framing may be increased. Nailing or attachment to the supporting framing should be increased, and blocking for the diaphragm at the wood structural panel joints should be added.

For straight-sheathed diaphragms, the increase in shear capacity is minimal. Double straight-sheathed diaphragms with minimal nailing in the upper or both layers of sheathing may be enhanced significantly by adding new nails or staples to the existing diaphragm. The same is true for diaphragms that are single diagonally sheathed, double diagonally sheathed, or single diagonally sheathed with straight sheathing or flooring.

In some cases, increased nailing at the wood structural panel infield may also be required. If the required shear capacity or stiffness is greater than that which can be provided by increased attachment, a new overlay on the existing diaphragm may be required to provide the desired enhancement.

12.5.2.3 New Wood Diaphragms

12.5.2.3.1 New Wood Structural Panel Sheathing New wood structural panel sheathed diaphragms shall include new wood structural panels connected to new framing members or connected to existing framing members after existing sheathing has been removed.

C12.5.2.3.1 New Wood Structural Panel Sheathing Typically, these constructions consist of wood structural panels—such as wood structural panel or oriented strand board—nailed or stapled to existing framing members after existing sheathing has been removed. Different grades and thicknesses of wood structural panels can be used, depending on the requirements for gravity load support and diaphragm shear capacity. In most cases, the panels are placed with the long dimension perpendicular to the framing members, and panel edges at the ends of the panels are supported by, and nailed to, the framing members. Edges at the sides of the panels can be blocked or unblocked, depending on

the shear capacity and stiffness required in the new diaphragm. Wood structural panels can be placed in various patterns, as shown in AWC SDPWS.

12.5.2.3.2 New Single-Diagonal Sheathing New single-diagonally sheathed wood diaphragms shall include new sheathing laid at approximately a 45-degree angle and connected to the existing framing members.

12.5.2.3.3 New Double-Diagonal Sheathing New double-diagonally sheathed wood diaphragms shall include diaphragms with new sheathing laid at approximately a 45-degree angle to the existing framing members with a second layer of sheathing laid at approximately a 90-degree angle to the first layer, where both layers shall be connected to the framing members.

12.5.2.3.4 New Braced Horizontal Diaphragms New braced horizontal diaphragms shall include a new horizontal truss system attached to the existing framing at the floor or roof level of the building.

C12.5.2.3.4 New Braced Horizontal Diaphragms Because new horizontal truss systems induce new forces on existing framing members, it may be more economical to design floor or roof sheathing as a diaphragm. This method eliminates the potential need to strengthen wood members at the compression struts. Braced horizontal diaphragms are more feasible where sheathing cannot provide sufficient shear capacity or where diaphragm openings reduce the shear capacity of the diaphragm and additional shear capacity is needed.

12.5.3 Stiffness, Strength, Acceptance Criteria, and Connection Design for Wood Diaphragms

12.5.3.1 Single Straight Sheathing Diaphragms

12.5.3.1.1 Stiffness of Single Straight Sheathing Diaphragms The deflection of straight-sheathed diaphragms shall be calculated using Eq. (12-3):

$$\Delta_y = 5v_yL^3/(8EAb) + v_yL/(4G_d) + \Sigma(\Delta_c X)/(2b) \quad (12\text{-}3)$$

where A = area of diaphragm chords cross section (in.^{2});
b = diaphragm width (ft);
E = modulus of elasticity of diaphragm chords (lb/in.^{2});
$\Sigma(\Delta_c X)$ = sum of individual chord-splice slip values on both sides of the diaphragm, each multiplied by its distance to the nearest support;
G_d = diaphragm shear stiffness from Table 12-2 (lb/in.);
L = diaphragm span, distance between shear walls or collectors (in.);
v_y = shear per unit length at yield in the direction under consideration (lb/in.); and
Δ_y = calculated diaphragm deflection at yield (in.).

Properties used to compute diaphragm deflection and stiffness shall be based on Section 12.2.2.

C12.5.3.1.1 Stiffness of Single Straight Sheathing Diaphragms Straight-sheathed diaphragms are characterized by high flexibility with a long period of vibration. These diaphragms are suitable for low shear conditions where control of diaphragm deflections is not needed to attain the desired Performance Level. See Section C12.5.3.6.1 for discussion of calculation of deflection caused by diaphragm chords and diaphragm chord-splice slip.

12.5.3.1.2 Strength of Single Straight Sheathing Diaphragms The expected strength of straight-sheathed diaphragms shall be determined in accordance with Section 12.2.2.

C12.5.3.1.2 Strength of Single Straight Sheathing Diaphragms The expected capacity of straight-sheathed diaphragms is dependent on the size, number, and spacing between the nails at each sheathing board, and the spacing of the supporting framing members. The shear capacity of straight-sheathed diaphragms can be calculated using the nail couple method. See *Guidelines for the Design of Horizontal Wood Diaphragms*, ATC-7 (1981) for a discussion of calculating the shear capacity of straight-sheathed diaphragms.

12.5.3.1.3 Acceptance Criteria for Single Straight Sheathing Diaphragms For linear procedures, *m*-factors for use with deformation-controlled actions shall be taken from Table 12-3. For nonlinear procedures, the coordinates of the generalized force–deformation relation, described by Fig. 12-1, and deformation acceptance criteria shall be taken from Table 12-4.

C12.5.3.1.3 Acceptance Criteria for Single Straight Sheathing Diaphragms Deformation acceptance criteria largely depend on the allowable deformations for other structural and nonstructural components and elements that are laterally supported by the diaphragm. Allowable deformations must also be consistent with the permissible damage state of the diaphragm.

12.5.3.1.4 Connections of Single Straight Sheathing Diaphragms Connections between diaphragms and shear walls and other vertical elements shall be considered in accordance with Section 12.5.1.

C12.5.3.1.4 Connections of Single Straight Sheathing Diaphragms The load capacity of connections between diaphragms and shear walls or other vertical elements, as well as diaphragm chords and shear collectors, is critical.

12.5.3.2 Double Straight Sheathing Diaphragms

12.5.3.2.1 Stiffness of Double Straight Sheathing Diaphragms The deflection of double straight-sheathed diaphragms shall be calculated using Eq. (12-3). Properties used to compute diaphragm deflection and stiffness shall be based on Section 12.2.2.

C12.5.3.2.1 Stiffness of Double Straight Sheathing Diaphragms The double-sheathed system provides a significant increase in stiffness over a single straight-sheathed diaphragm, but very little test data are available on the stiffness and strength of these diaphragms. Both layers of straight sheathing must have sufficient nailing, and the joints of the top layer must be either offset or perpendicular to the bottom layer.

12.5.3.2.2 Strength of Double Straight Sheathing Diaphragms The expected strength of double straight-sheathed diaphragms shall be determined in accordance with Section 12.2.2.

C12.5.3.2.2 Strength of Double Straight Sheathing Diaphragms The strength and stiffness of double straight-sheathed diaphragms is highly dependent on the nailing of the upper layer of sheathing. If the upper layer has minimal nailing, the increase in strength and stiffness over a single straight-sheathed diaphragm may be slight. If the upper layer of sheathing has nailing similar to that of the lower layer of sheathing, the increase in strength and stiffness is significant.

12.5.3.2.3 Acceptance Criteria for Double Straight Sheathing Diaphragms For linear procedures, *m*-factors for use with deformation-controlled actions shall be taken from Table 12-3. For nonlinear procedures, the coordinates of the generalized force–deformation relation, described by Fig. 12-1, and deformation acceptance criteria shall be taken from Table 12-4.

12.5.3.2.4 Connections of Double Straight Sheathing Diaphragms Connections between diaphragms and shear walls and other vertical elements shall be considered in accordance with Section 12.5.1.

12.5.3.3 Single Diagonal Sheathing Diaphragms

12.5.3.3.1 Stiffness of Single Diagonal Sheathing Diaphragms The deflection of single diagonally sheathed diaphragms shall be calculated using Eq. (12-3). Properties used to compute diaphragm deflection and stiffness shall be based on Section 12.2.2.

C12.5.3.3.1 Stiffness of Single Diagonal Sheathing Diaphragms Single diagonally sheathed diaphragms are significantly stiffer than straight-sheathed diaphragms but are still quite flexible.

12.5.3.3.2 Strength of Single Diagonal Sheathing Diaphragms The expected strength for diagonally sheathed wood diaphragms with chords shall be determined in accordance with Section 12.2.2.

C12.5.3.3.2 Strength of Single Diagonal Sheathing Diaphragms Diagonally sheathed diaphragms are usually capable of resisting moderate shear loads.

Because the diagonal sheathing boards function in tension and compression to resist shear forces in the diaphragm and the boards are placed at a 45-degree angle to the chords at the ends of the diaphragm, the component of the force in the sheathing boards that is perpendicular to the axis of the end chords creates a bending force in the end chords. If the shear in diagonally sheathed diaphragms is limited to approximately 300 lb/ft or less, bending forces in the end chords are usually neglected. If shear forces exceed 300 lb/ft, the end chords should be designed or reinforced to resist bending forces from the sheathing. See *Guidelines for the Design of Horizontal Wood Diaphragms*, ATC-7 (1981) for methods of calculating the shear capacity of diagonally sheathed diaphragms.

12.5.3.3.3 Acceptance Criteria for Single Diagonal Sheathing Diaphragms For linear procedures, *m*-factors for use with deformation-controlled actions shall be taken from Table 12-3. For nonlinear procedures, the coordinates of the generalized force–deformation relation, described by Fig. 12-1, and deformation acceptance criteria shall be taken from Table 12-4.

12.5.3.3.4 Connections of Single Diagonal Sheathing Diaphragms Connections between diaphragms and shear walls and other vertical elements shall be considered in accordance with Section 12.5.1.

12.5.3.4 Diagonal Sheathing with Straight Sheathing or Flooring Above Diaphragms

12.5.3.4.1 Stiffness of Diagonal Sheathing with Straight Sheathing or Flooring Above Diaphragms The deflection of diagonally sheathed diaphragms with straight sheathing or flooring above shall be calculated using Eq. (12-3). Properties used to compute diaphragm deflection and stiffness shall be based on Section 12.2.2.

C12.5.3.4.1 Stiffness of Diagonal Sheathing with Straight Sheathing or Flooring Above Diaphragms Straight sheathing or flooring over diagonal sheathing provides a significant increase in stiffness over single-sheathed diaphragms.

12.5.3.4.2 Strength of Diagonal Sheathing with Straight Sheathing or Flooring Above Diaphragms The expected strength of diagonally sheathed diaphragms with straight sheathing or flooring above shall be determined in accordance with Section 12.2.2.

C12.5.3.4.2 Strength of Diagonal Sheathing with Straight Sheathing or Flooring Above Diaphragms Shear capacity is dependent on the nailing of the diaphragm. The strength and stiffness of diagonally sheathed diaphragms with straight sheathing above is highly dependent on the nailing of both layers of sheathing. Both layers of sheathing should have at least two 8d common nails per board at each support.

12.5.3.4.3 Acceptance Criteria for Diagonal Sheathing with Straight Sheathing or Flooring Above Diaphragms For linear procedures, *m*-factors for use with deformation-controlled actions shall be taken from Table 12-3. For nonlinear procedures, the coordinates of the generalized force–deformation relation, described by Fig. 12-1, and deformation acceptance criteria shall be taken from Table 12-4.

12.5.3.4.4 Connections of Diagonal Sheathing with Straight Sheathing or Flooring Above Diaphragms Connections between diaphragms and shear walls and other vertical elements shall be considered in accordance with Section 12.5.1.

12.5.3.5 Double Diagonal Sheathing Diaphragms

12.5.3.5.1 Stiffness of Double Diagonal Sheathing Diaphragms The deflection of double diagonally sheathed diaphragms shall be calculated using Eq. (12-3). Properties used to compute diaphragm deflection and stiffness shall be based on Section 12.2.2.

C12.5.3.5.1 Stiffness of Double Diagonal Sheathing Diaphragms Double diagonally sheathed diaphragms have greater stiffness than diaphragms with single diagonal sheathing. The response of these diaphragms is similar to the response of diagonally sheathed diaphragms with straight sheathing overlays.

12.5.3.5.2 Strength of Double Diagonal Sheathing Diaphragms The expected strength of double diagonally sheathed wood diaphragms shall be determined in accordance with Section 12.2.2.

C12.5.3.5.2 Strength of Double Diagonal Sheathing Diaphragms Shear capacity is dependent on the nailing of the diaphragm, but these diaphragms are usually suitable for moderate to high shear loads.

Shear capacities are similar to those of diagonally sheathed diaphragms with straight sheathing overlays. The sheathing boards in both layers of sheathing should be nailed with at least two 8d common nails at each support. The presence of a double layer of diagonal sheathing eliminates the bending forces that single diagonally sheathed diaphragms impose on the chords at the ends of the diaphragm. As a result, the bending capacity of the end chords does not have an effect on the shear capacity and stiffness of the diaphragm.

12.5.3.5.3 Acceptance Criteria for Double Diagonal Sheathing Diaphragms For linear procedures, *m*-factors for use with deformation-controlled actions shall be taken from Table 12-3. For nonlinear procedures, the coordinates of the generalized force–deformation, described by Fig. 12-1, and deformation acceptance criteria shall be taken from Table 12-4.

12.5.3.5.4 Connections of Double Diagonal Sheathing Diaphragms Connections between diaphragms and shear walls and other vertical elements shall be considered in accordance with Section 12.5.1.

12.5.3.6 Wood Structural Panel Sheathing Diaphragm

12.5.3.6.1 Stiffness of Wood Structural Panel Sheathing Diaphragms The deflection of blocked and chorded wood structural

panel diaphragms with constant nailing across the diaphragm length shall be determined using Eq. (12-4):

$$\Delta_y = 5v_yL^3/(8EAb) + v_yL/(4Gt) + 0.188Le_n + \Sigma(\Delta_cX)/(2b) \quad (12\text{-}4)$$

where A = area of diaphragm chords cross section (in.^{2});
b = diaphragm width (ft);
E = modulus of elasticity of diaphragm chords (lb/in.^{2});
e_n = nail deformation at yield load per nail (in.). Values listed are for Structural I panels; multiply by 1.2 for all other panel grades;
= 0.13 for 6d nails at yield;
= 0.08 for 8d nails at yield;
= 0.08 for 10d nails at yield;
G = modulus of rigidity of wood structural panels (lb/in.^{2});
L = diaphragm span, distance between shear walls or collectors (ft);
t = effective thickness of wood structural panel for shear (in.);
v_y = shear at yield in the direction under consideration (lb/ft);
Δ_y = calculated deflection of diaphragm at yield (in.); and
$\Sigma(\Delta_cX)$ = sum of individual chord-splice slip values on both sides of the diaphragm, each multiplied by its distance to the nearest support.

Alternatively, a more rigorous calculation of diaphragm deflection based on rational engineering principles shall be permitted.

The deflection of blocked and chorded wood structural panel diaphragms with variable nailing across the diaphragm length shall be determined using Eq. (12-5):

$$\Delta_y = 5v_yL^3/(8EAb) + v_yL/(4Gt) + 0.376Le_n + \Sigma(\Delta_cX)/(2b) \quad (12\text{-}5)$$

Alternatively, a more rigorous calculation of diaphragm deflection based on rational engineering principles shall be permitted.

The deflection of unblocked diaphragms shall be calculated using Eq. (12-3). Properties used to compute diaphragm deflection and stiffness shall be based on Section 12.2.2.

C12.5.3.6.1 Stiffness of Wood Structural Panel Sheathing Diaphragms The response of wood structural panel diaphragms is dependent on the thickness of the wood structural panels, the length-to-width (L/b) ratio, nailing pattern, and presence of chords in the diaphragm, as well as other factors. Values for modulus rigidity, G, and effective thickness, t, for various sheathing materials are contained in *Plywood Design Specification* (APA 1997), AWC SDPWS Commentary, and *Panel Design Specification* (APA 2008).

In most cases, the area of the diaphragm chord equals the area of the continuous wood (or steel) member to which the sheathing is attached. For buildings with wood diaphragms and concrete or masonry walls, however, the area of the diaphragm chord is more difficult to identify, and engineering judgment is required. The tension area of the diaphragm chord on both edges of the diaphragm should be used for deflection calculations. Generally, this result is conservative because it results in a larger calculated deflection. Use of the tension area of the diaphragm chord may not yield conservative results, however, where calculating the period of the building using Eq. (7-20).

The term Δ_cX is determined by multiplying the assumed diaphragm chord slip at a single chord splice, Δ_c, by the distance, X, from the diaphragm chord splice to the nearest support (shear wall).

An alternate constant that can be used in the nail slip contribution term where panel nailing is not uniform is provided in Appendix C of *Diaphragms and Shear Walls Design/Construction Guide* (APA 2001).

Example calculations of diaphragm deflection are provided in *Design of Wood Structures* (Breyer et al. 1999) and AWC SDPWS Commentary.

12.5.3.6.2 Strength of Wood Structural Panel Sheathing Diaphragms The expected strength of wood structural panel diaphragms shall be taken as mean maximum strengths obtained experimentally. Expected strengths shall be permitted to be based on 1.5 times yield strengths of wood structural panel diaphragms. Yield strengths shall be determined using LRFD procedures contained in AWC SDPWS, except that the resistance factor, ϕ, shall be taken as 1.0 and expected material properties shall be determined in accordance with Section 12.2.2.

Conversion for tabulated allowable stress values in accordance with Section 12.2.2.5.1 shall not be permitted for wood structural panel diaphragms, but approved allowable stress values for fasteners shall be permitted to be converted in accordance with Section 12.2.2.5.1 where the strength of a shear wall is computed using principles of mechanics.

The expected shear capacity of unchorded diaphragms shall be calculated by multiplying the values given for chorded diaphragms by 0.60.

C12.5.3.6.2 Strength of Wood Structural Panel Sheathing Diaphragms Shear capacities of wood structural panel diaphragms are primarily dependent on the nailing at the wood structural panel edges and the thickness and grade of the wood structural panel in the diaphragm.

Yield strengths for seismic design are tabulated in AWC SDPWS for various configurations of diaphragm construction. A method for calculating the capacity of wood structural panel diaphragms based on accepted nail values and panel shear strength is provided in Tissell and Elliott (1997). For this method, use LRFD-based fastener strengths. Because of the differences in load-duration and time-effect factors between the allowable stress and LRFD formats, direct conversion of diaphragm tables using the method outlined in Section 12.2.2.5.1 is not permitted. However, the tabulated AWC SDPWS yield strengths for seismic design of diaphragms (i.e., LRFD design values with $\phi = 1.0$) are 2.0 times the associated allowable stress design values.

12.5.3.6.3 Acceptance Criteria for Wood Structural Panel Sheathing Diaphragms For linear procedures, m-factors for use with deformation-controlled actions shall be taken from Table 12-3. For nonlinear procedures, the coordinates of the generalized force–deformation relation, described by Fig. 12-1, and deformation acceptance criteria shall be taken from Table 12-4.

12.5.3.6.4 Connections of Wood Structural Panel Sheathing Diaphragms Connections between diaphragms and shear walls and other vertical elements shall be considered in accordance with Section 12.5.1.

12.5.3.7 Wood Structural Panel Overlays on Straight or Diagonal Sheathing Diaphragms

12.5.3.7.1 Stiffness of Wood Structural Panel Overlays on Straight or Diagonal Sheathing Diaphragms Placement of the

new wood structural panel overlay shall be consistent with Section 12.5.2.2.

The deflection of wood structural panel overlays on straight or diagonally sheathed diaphragms shall be calculated using Eq. (12-3).

C12.5.3.7.1 Stiffness of Wood Structural Panel Overlays on Straight or Diagonal Sheathing Diaphragms The stiffness of existing straight-sheathed diaphragms can be increased significantly by placing a new wood structural panel overlay over the existing diaphragm. The stiffness of existing diagonally sheathed diaphragms and wood structural panel diaphragms is increased but not in proportion to the stiffness increase for straight-sheathed diaphragms.

Depending on the nailing of the new overlay, the response of the diaphragm may be similar to that of a blocked or an unblocked diaphragm.

12.5.3.7.2 Strength of Wood Structural Panel Overlays on Straight or Diagonal Sheathing Diaphragms Strength of wood structural panel overlays shall be determined in accordance with Section 12.3.2.2. It shall be permitted to take the expected strength of wood structural panel overlays as the value for the corresponding wood structural panel diaphragm without the existing sheathing below, computed in accordance with Section 12.5.3.6.2.

12.5.3.7.3 Acceptance Criteria for Wood Structural Panel Overlays on Straight or Diagonal Sheathing Diaphragms For linear procedures, *m*-factors for use with deformation-controlled actions shall be taken from Table 12-3. For nonlinear procedures, the coordinates of the generalized force–deformation relation, described by Fig. 12-1, and deformation acceptance criteria shall be taken from Table 12-4.

12.5.3.7.4 Connections of Wood Structural Panel Overlays on Straight or Diagonal Sheathing Diaphragms Connections between diaphragms and shear walls and other vertical elements shall be considered in accordance with Section 12.5.1.

12.5.3.8 Wood Structural Panel Overlays on Existing Wood Structural Panel Sheathing Diaphragms

12.5.3.8.1 Stiffness of Wood Structural Panel Overlays on Existing Wood Structural Panel Sheathing Diaphragms Diaphragm deflection shall be calculated in accordance with Eq. (12-3) or using accepted principles of mechanics. Nails in the upper layer of the wood structural panel shall have sufficient embedment in the framing to meet the requirements of AWC SDPWS.

C12.5.3.8.1 Stiffness of Wood Structural Panel Overlays on Existing Wood Structural Panel Sheathing Diaphragms According to Tissell and Elliott (1997), Eq. (12-4) is not applicable to two-layer diaphragms, presumably because of the difficulty in estimating the combined nail slip. Diaphragm deflection may be estimated using principles of mechanics that include consideration of nail slip, blocking, and the embedment of nails into the framing.

12.5.3.8.2 Strength of Wood Structural Panel Overlays on Existing Wood Structural Panel Sheathing Diaphragms Expected strength shall be calculated based on the combined two layers of wood structural panel sheathing, with the strength of the overlay limited to 75% of the values calculated in accordance with Section 12.5.3.6.2.

12.5.3.8.3 Acceptance Criteria for Wood Structural Panel Overlays on Existing Wood Structural Panel Sheathing Diaphragms For linear procedures, *m*-factors for use with deformation-controlled actions shall be taken from Table 12-3. For nonlinear procedures, the coordinates of the generalized force–deformation relation, described by Fig. 12-1, and deformation acceptance criteria shall be taken from Table 12-4.

12.5.3.8.4 Connections of Wood Structural Panel Overlays on Existing Wood Structural Panel Sheathing Diaphragms Connections between diaphragms and shear walls and other vertical elements shall be considered in accordance with Section 12.5.1.

12.5.3.9 Braced Horizontal Diaphragms Braced horizontal diaphragms shall be considered in accordance with Section 12.7.1.

Connections between members of the horizontal bracing system and shear walls or other vertical elements shall be considered in accordance with Section 12.5.1.

12.6 WOOD FOUNDATIONS

12.6.1 Types of Wood Foundations Types of wood foundations include wood piling, wood footings, and pole structures. Wood piling shall include friction or end-bearing piles that resist only vertical loads.

C12.6.1 Types of Wood Foundations

1. **Wood Piling.** Wood piles are generally used with a concrete pile cap and are usually keyed into the base of the concrete cap. The piles are usually treated with preservatives.

   Piles are classified as either friction- or end-bearing piles. Piles are generally not able to resist uplift loads because of the manner in which they are attached to the pile cap. The piles may be subjected to lateral forces from seismic loading, which are resisted by bending of the piles. The analysis of pile bending is generally based on a pinned connection at the top of the pile and fixity of the pile at some depth established by the geotechnical engineer. However, it should be evaluated with consideration for the approximate nature of the original assumption of the depth to point of fixity. Where battered piles are present, the lateral forces can be resisted by the horizontal component of the axial load.
2. **Wood Footings.** Wood grillage footings, sleepers, skids, and pressure-treated all-wood foundations can be encountered in existing structures. These foundations are highly susceptible to deterioration. The seismic resistance of wood footings is generally very low; they are essentially dependent on friction between the wood and soil for their performance.
3. **Pole Structures.** Pole structures resist seismic forces by acting as cantilevers fixed in the ground, with the seismic forces considered to be applied perpendicular to the pole axis. It is possible to design pole structures to have moment-resisting capacity at floor and roof levels by the use of knee braces or trusses. Pole structures are frequently found on sloping sites. The varying unbraced lengths of the poles generally affect the stiffness and performance of the structure and can result in unbalanced loads to the various poles, along with significant torsional distortion, which must be investigated and evaluated. Additional horizontal and diagonal braces can be used to reduce the flexibility of tall poles or reduce the torsional eccentricity of the structure.

12.6.2 Analysis, Strength, and Acceptance Criteria for Wood Foundations The expected strength of wood piles shall be com-

puted in accordance with Section 12.3.2.2. Lateral deflection of piles under seismic loads shall be calculated based on an assumed point of fixity. Unless rigidly connected to the pile cap, wood piles shall be taken as pinned at the top.

Flexure and axial loads in wood piles shall be considered deformation-controlled. The *m*-factors shall be taken from Table 12-3.

Wood footings shall be investigated for the presence of deterioration. Acceptability of soils below wood footings shall be determined in accordance with Chapter 4.

Component and connection strength of pole structures shall be based on Section 12.2. Pole structures shall be modeled as cantilever elements and analyzed in accordance with Chapter 7.

Flexure and axial loads in pole structures shall be considered deformation controlled. The *m*-factors shall be taken from Table 12-3. Where concentrically braced diagonals are added to enhance the capacity of the pole structure, reduced *m*-factors taken from Table 12-3 shall be used.

C12.6.2 Analysis, Strength, and Acceptance Criteria for Wood Foundations The strength of the components, elements, and connections of a pole structure are the same as for a conventional structure.

12.6.3 Retrofit Measures for Wood Foundations Seismic retrofit measures for wood foundations shall meet the requirements of Section 12.3.5 and other provisions of this standard.

Wood foundations exhibiting signs of deterioration shall be retrofitted or replaced as required to satisfy the selected performance objective.

C12.6.3 Retrofit Measures for Wood Foundations Wood footings showing signs of deterioration may be replaced with reinforced concrete footings. Wood pole structures can be retrofitted with the installation of diagonal braces or other supplemental seismic-force-resisting elements. Structures supported on wood piles may be retrofitted by the installation of additional piles.

12.7 OTHER WOOD ELEMENTS AND COMPONENTS

12.7.1 General Wood elements and components, other than shear walls, diaphragms, and foundations, shall be considered in accordance with this section. Where an assembly includes wood components and steel rods, the rods shall be considered in accordance with applicable provisions of Chapter 9.

C12.7.1 General Other wood elements include knee-braced frames, rod-braced frames, and braced horizontal diaphragms, among other systems.

Knee-braced frames produce moment-resisting joints by the addition of diagonal members between columns and beams. The resulting "semirigid" frame resists lateral forces. The moment-resisting capacity of knee-braced frames varies widely. The controlling part of the assembly is usually the connection; however, bending of members can be the controlling feature of some frames. Once the capacity of the connection is determined, members can be checked and the capacity of the frame can be determined by statics. Particular attention should be given to the beam–column connection. Additional tensile forces may be developed in this connection because of knee-brace action under vertical loads.

Similar to knee-braced frames, the connections of rods to timber framing usually govern the capacity of the rod-braced frame. Typically, the rods act only in tension. Once the capacity of the connection is determined, the capacity of the frame can be determined by statics.

Braced horizontal diaphragms are described in Section 12.5.2.1.7.

12.7.1.1 Stiffness of Other Wood Elements and Components The stiffness and deflection of wood elements other than shear walls, diaphragms, and foundations shall be determined based on a mathematical model or by a test program for the assembly, considering the configuration, stiffness, and interconnection of the individual components approved by the authority having jurisdiction.

12.7.1.2 Strength of Other Wood Elements and Components The capacities of individual components, including connections, shall be determined in accordance with Section 12.3.2.

C12.7.1.2 Strength of Other Wood Elements and Components The strength of wood elements is dependent on the strength of the individual components that comprise the assembly. In many cases, the capacity of the connections between components is the limiting factor in the strength of the assembly.

12.7.1.3 Acceptance Criteria for Other Wood Elements and Components For linear procedures, design actions shall be compared with design capacities in accordance with Section 7.5.2.2. Connections shall be considered in accordance with Section 12.3.3. Axial tension and axial tension with bending shall be considered deformation controlled. Axial compression and connections between steel rods and wood components shall be considered force controlled. The *m*-factors for deformation-controlled actions shall be taken from Table 12-3 for component actions listed. The *m*-factors for deformation-controlled component actions not included in Table 12-3 shall be established in accordance with Section 7.6. For nonlinear procedures, coordinates of the generalized force–deformation relation, described by Fig. 12-1, and deformation acceptance criteria shall be taken from Table 12-4.

C12.7.1.3 Acceptance Criteria for Other Wood Elements and Components Deformation acceptance criteria largely depend on the allowable deformations for other structural and nonstructural components that are supported by the element. Allowable deformations must also be consistent with the desired performance level. Actions on connection types that do not appear in Table 12-3 (e.g., truss plates) are force controlled.

CHAPTER 13
ARCHITECTURAL, MECHANICAL, AND ELECTRICAL COMPONENTS

13.1 SCOPE

This chapter sets forth requirements for the seismic evaluation and retrofit of existing architectural, mechanical, and electrical components and systems that are permanently installed in, or are an integral part of, a building system. Procedures of this chapter are applicable to both the deficiency-based and systematic methods. The Performance Levels for nonstructural components are defined in Section 2.3.2. Requirements are provided for nonstructural components that are retrofit to the Position Retention, Life Safety, and Operational Nonstructural Performance Levels. The requirements for Operational Nonstructural Performance shall be consistent with ASCE 7 Chapter 13 requirements for the case where I_p, as defined in ASCE 7, is set equal to 1.5 and as stipulated herein or through the use of other approved methods.

Buildings in regions of Very Low Seismicity, unless specifically required in Chapters 4, 5, or 16, or buildings where the target Building Performance Level includes Nonstructural Performance Level Not Considered need not comply with the provisions of this chapter.

Sections 13.2 and 13.3 provide requirements for condition assessment and component evaluation. Section 13.4 specifies procedures for determining forces and deformations on nonstructural components. Section 13.5 identifies retrofit methods. Sections 13.6, 13.7, and 13.8 specify evaluation and acceptance criteria for architectural components; mechanical, electrical, and plumbing (MEP) systems; and other equipment.

Nonstructural components shall be included in the mathematical model of the building in accordance with the requirements of Section 7.2.3.3. Nonstructural components included in the mathematical model of the building shall be evaluated for forces and deformations imposed by the structure, computed in accordance with Chapter 7.

New nonstructural components installed in existing buildings shall conform to the requirements of this standard. New nonstructural components designed to the Life Safety Performance Level may be designed using the requirements of similar components for new buildings.

C13.1 SCOPE

The core of this chapter is contained in Table 13-1, which provides the following:

1. A list of nonstructural components subject to the Life Safety and Position Retention requirements of this standard.
2. Evaluation and retrofit requirements related to the level of seismicity and Life Safety, and Position Retention Nonstructural Performance Levels. Requirements for Operational Nonstructural Performance are not included in this standard. References that may be used to seismically qualify equipment and systems to achieve Operational Nonstructural Performance for some nonstructural components are provided in Section C2.3.2.1.
3. Identification of the required evaluation procedure (analytical or prescriptive).

Section 2.2 provides general requirements and discussion of Performance Objectives, and Performance Levels as they pertain to nonstructural components. Criteria for means of egress are not specifically included in this standard.

Section 13.4 provides sets of equations for a simple, default, force analysis, as well as an extended analysis method that considers additional factors. This section defines the analytical procedure for determining drift ratios and relative displacement and outlines general requirements for the prescriptive procedure.

Section 13.5 notes the general ways in which nonstructural evaluation and retrofit are carried out.

Sections 13.6, 13.7, and 13.8 provide the evaluation and retrofit criteria for each component category identified in Table 13-1. For each component, the following information is given.

1. Definition and scope;
2. Component behavior and retrofit methods;
3. Acceptance criteria; and
4. Evaluation requirements.

13.2 EVALUATION AND RETROFIT PROCEDURE FOR NONSTRUCTURAL COMPONENTS

Nonstructural components shall be evaluated and retrofitted by completing the following steps:

1. The Performance Objective shall be established in accordance with Section 2.2, which includes selection of a Nonstructural Performance Level and a Seismic Hazard Level. The level of seismicity shall be determined in accordance with Section 2.5.
2. A walk-through and condition assessment shall be performed in accordance with Sections 13.2.1 and 13.2.2.
3. Analysis, evaluation, and retrofit requirements for the selected Nonstructural Performance Level and appropriate level of seismicity shall be determined for nonstructural components using Table 13-1. "Yes" indicates that retrofit shall be required if the component does not meet applicable acceptance criteria specified in Section 13.3.
4. Interaction between structural and nonstructural components shall be considered in accordance with Sections 7.2.3.3, 13.4, and 14.2.6.

Table 13-1. Nonstructural Components: Applicability of Life Safety and Position Retention Requirements and Methods of Analysis

Component Type	Seismicity: High Seismicity PR	High Seismicity LS	Moderate Seismicity PR	Moderate Seismicity LS	Low Seismicity PR	Low Seismicity LS	Evaluation Procedure
	Performance Level						
Architectural (Section 13.6)							
1. **Cladding and Glazing**							
Adhered veneer	Yes	Yes	Yes	Yes	Yes	Yes	F/D
Anchored veneer	Yes	Yes	Yes	Yes	Yes	Yes	F/D
Glass blocks and other nonstructural masonry walls	Yes	Yes	Yes	Yes	Yes	Yes	F/D
Prefabricated panels	Yes	Yes	Yes	Yes	No	No	F/D
Glazed exterior wall systems	Yes	Yes	Yes	Yes	No	No	F/D/P
2. **Partitions**							
Heavy, URM, or hollow clay tile	Yes	Yes	Yes	Yes	Yes	Yes	F/D
Light	Yes	No	Yes	No	No	No	F/D
Glazed	Yes	Yes	Yes	Yes	No	No	F/D/P
3. **Interior Veneers**							
Stone, including marble	Yes	Yes	Yes	Yes	No	No	F/D
4. **Ceilings**							
Directly applied to structure	Yes	No[a]	Yes	No[a]	No	No	F
Dropped furred gypsum board	Yes	Yes	No	No	No	No	F
Suspended lath and plaster	Yes	Yes	Yes	Yes	Yes	No	F
Suspended integrated ceiling	Yes	No	Yes	No	No	No	P
5. **Parapets and Cornices**							
Unreinforced masonry	Yes	Yes	Yes	Yes	Yes	Yes	F[b]
Concrete and reinforced masonry	Yes	Yes	Yes	Yes	Yes	No	F
Other	Yes	Yes	Yes	Yes	Yes	No	F
6. **Architectural Appendages and Marquees**	Yes	Yes	Yes	Yes	Yes	Yes	F
7. **Chimneys and Stacks**	Yes	Yes	Yes	Yes	Yes	Yes	F[c]
8. **Stairs**	Yes	Yes	Yes	Yes	Yes	Yes	F/D
9. **Doors Required for Emergency Services Egress**	Yes	Yes	Yes	No	No	No	F/D
Mechanical Equipment (Section 13.7)							
1. **Mechanical Equipment**							
Boilers, furnaces, pumps, and chillers	Yes	No	No	No	No	No	F
General manufacturing and process machinery	Yes	No[d]	No[d]	No	No	No	F
Hazardous material equipment	Yes	Yes	Yes	Yes	Yes	Yes	F
Fire suppression equipment	Yes	Yes	Yes	Yes	Yes	Yes	F
HVAC equipment, vibration isolated	Yes	No[d]	No[d]	No	No	No	F
HVAC equipment, non-vibration isolated	Yes	No[d]	No[d]	No	No	No	F
HVAC equipment, mounted in line with ductwork	Yes	Yes	No[d]	No	No	No	P
2. **Storage Vessels and Water Heaters**							
Structurally supported vessels (Category 1)	Yes	No[d]	No[d]	No	No	No	P/F[e]
Flat bottom vessels (Category 2)	Yes	No[d]	No[d]	No	No	No	F[f]
Fire water storage tanks and reservoirs	Yes	Yes	Yes	Yes	Yes	Yes	F
3. **Pressure Piping**	Yes	Yes	Yes	No	No	No	D[f]
4. **Fire Suppression Piping**	Yes	Yes	Yes	Yes	Yes	Yes	P
5. **Fluid Piping, not Fire Suppression**	Yes	No	No	No	No	No	
Hazardous materials	Yes	Yes	Yes	Yes	Yes	Yes	P/F/D
Nonhazardous materials	Yes	No	No[i]	No	No	No	P/F/D
6. **Ductwork**							
Stair and smoke ducts	Yes	Yes	Yes	Yes	Yes	Yes	P/F/D
Hazardous material ducts	Yes	Yes	Yes	Yes	Yes	Yes	P/F/D
Other HVAC ducts	Yes	No[g]	No[g]	No[g]	No[g]	No	P/F/D
Electrical and Communications (Section 13.7)							
1. **Electrical and Communications Equipment**	Yes	No[h]	Yes	No	No	No	F
2. **Electrical and Communications Distribution Equipment**							
Emergency power equipment	Yes	Yes	Yes	Yes	Yes	Yes	P/F/D
Other	Yes	No	Yes	No	No	No	P/F/D

Table 13-1. *(Continued)*

Component Type	Seismicity: High Seismicity PR	High Seismicity LS	Moderate Seismicity PR	Moderate Seismicity LS	Low Seismicity PR	Low Seismicity LS	Evaluation Procedure
	Performance Level						
3. **Light Fixtures**							
Recessed	Yes	No	No	No	No	No	P[i]
Surface mounted	Yes	No	No	No	No	No	P[i]
Integrated ceiling	Yes	No	Yes	No	No	No	P
Pendant	Yes	No[j]	No[j]	No	No	No	F/P
Emergency lighting	Yes	No	Yes	No	Yes	No	F/P
Furnishings and Interior Equipment (Section 13.8)							
1. **Storage Racks**	Yes	Yes[k]	Yes	Yes[k]	No	No	F
2. **Contents**							
Tall and narrow	Yes	Yes	Yes	No	No	No	F
Fall prone	Yes	Yes	No	No	No	No	P/F
Suspended contents	Yes	No	Yes	No	No	No	F/D
3. **Computer Access Floors**	Yes	No	Yes	No	No	No	P/F/D
4. **Hazardous Materials Storage**	Yes	Yes	Yes	Yes	Yes	Yes	P/F
5. **Computer and Communication Racks**	Yes	No	No	No	No	No	P/F/D
6. **Elevators**	Yes	Yes	Yes	No	No	No	F/D/P
7. **Conveyors**	Yes	No	No	No	No	No	F/D/P

[a]Plaster ceilings on metal or wood lath over 10 ft^2 in area shall meet the Position Retention Nonstructural Performance Level.
[b]Retrofit of unreinforced masonry parapets not over 4 ft high by the prescriptive design concept shall be permitted.
[c]Retrofit of residential masonry chimneys by the prescriptive design concept shall be permitted.
[d]Equipment type 1 or 2 that is 6 ft or more high, equipment type 3, equipment forming part of an emergency power system, and gas-fired equipment in occupied or unoccupied space shall be retrofit to the Position Retention Nonstructural Performance Level in areas of moderate or high seismicity.
[e]Retrofit of residential water heaters with capacity less than 100 gal. by the prescriptive procedure shall be permitted. Other vessels shall meet the force provisions of Section 13.4.3.
[f]Retrofit of vessels or piping systems according to prescriptive standards shall be permitted. Storage vessels shall meet the force provisions of Section 13.4.3. Piping shall meet drift provisions of Section 13.4.4 and the force provisions of Section 13.4.3.
[g]Ductwork that conveys hazardous materials, exceeds 6 ft^2 in cross-sectional area, or is suspended more than 12 in. from the top of the duct to the supporting structure at any support point shall meet the requirements of the selected performance objective.
[h]Equipment that is 6 ft or more high, weighs more than 20 lb, or forms part of an emergency power and/or communication system shall meet the Position Retention Nonstructural Performance Level.
[i]Evaluation for the presence of an adequate attachment shall be checked as described in Section 13.7.9.3.
[j]Fixtures that exceed 20 lb per support shall meet the Life Safety Nonstructural Performance Level.
[k]Retrofit shall not be required for storage racks in unoccupied spaces.
[l]Unbraced pressure pipes with a 2-in. or larger diameter and suspended more than 12 in. from the top of the pipe to the supporting structure at any support point shall meet the requirements of the Position Retention Performance Objective.
Notes: PR = Position Retention Nonstructural Performance Level;
LS = Life Safety Nonstructural Performance Level;
F/D = Analytical procedure of Section 13.4.1 shall be implemented, and a force and deformation analysis shall be performed in accordance with Sections 13.4.3 and 13.4.4, respectively;
P = Use of the prescriptive procedure of Section 13.4.2 shall be permitted; and
F = Analytical procedure of Section 13.4.1 shall be implemented, and a force analysis shall be performed in accordance with Section 13.4.3.

5. The classification of each type of nonstructural component shall be determined in accordance with Section 13.2.2.
6. Evaluation or retrofit shall be conducted in accordance with Section 13.4, using the procedure specified in Table 13-1. The acceptability of bracing components and connections between nonstructural components and the structure shall be determined in accordance with Section 13.3.
7. Nonstructural components not meeting the requirements of the selected Nonstructural Performance Level shall be retrofitted in accordance with Section 13.5.

C13.2 EVALUATION AND RETROFIT PROCEDURE FOR NONSTRUCTURAL COMPONENTS

The authority having jurisdiction should be consulted to establish the areas of the building for which nonstructural hazards shall be considered. Other nonstructural components, such as those designated by the owner, also should be included in those that are evaluated.

The architectural, mechanical, and electrical components and systems of a historic building may be historically significant, especially if they are original to the building, very old, or innovative. Historic buildings may also contain hazardous materials, such as lead pipes and asbestos, that may or may not pose a hazard, depending on their location, condition, use or abandonment, containment, and/or disturbance during the retrofit.

13.2.1 Data Collection and Condition Assessment Available construction documents, equipment specification and data, and as-built information shall be obtained as specified in Section 3.2. Data on nonstructural components and equipment shall be collected to estimate the year of manufacture or installation of nonstructural components to justify selection of evaluation and

retrofit approaches and techniques based on available historical information, prevailing codes, and assessment of existing conditions.

A condition assessment of nonstructural components shall be performed as part of the nonstructural evaluation and retrofit process. As a minimum, this assessment shall determine the following:

1. The presence and configuration of each type of nonstructural component and its attachment to the structure;
2. The physical condition of each type of nonstructural component and whether or not degradation is present;
3. The presence of nonstructural components that potentially influence overall building performance; and
4. The presence of other nonstructural components whose failure could affect the performance of the nonstructural component being considered.

Direct visual inspection shall be performed on each type of nonstructural component in the building as follows:

1. If detailed drawings are available, at least one sample of each type, but not less than 5% of the total, of nonstructural component shall be observed. If no deviations from the drawings exist, the sample shall be considered representative of installed conditions. If deviations are observed, then at least 10% of all occurrences of the component shall be observed.
2. If detailed drawings are not available, at least three occurrences of each type of nonstructural component, but not less than 10%, shall be observed. If no deviations among the three occurrences are observed, the sample shall be considered representative of installed conditions. If deviations are observed, at least 20% of all occurrences of the component shall be observed.

C13.2.1 Data Collection and Condition Assessment For the purpose of visual observation, nonstructural component types should be based on the general types listed in Table 13-1. Further distinction can be made where difference in structural configuration of the component or its bracing exists.

Seismic interactions between nonstructural components and systems can have a profound influence on the performance of these systems. Where appropriate, the condition assessment should include an interaction review. A seismic interaction involves two components, a source and a target. An interaction source is the component or structure that could fail or displace and interact with another component. An interaction target is a component that is being impacted, sprayed, or spuriously activated. For an interaction to affect a component, it must be credible and significant. A credible interaction is one that can take place. For example, the fall of a ceiling panel located overhead from a motor control center is a credible interaction because the falling panel can reach and impact the motor control center. The target (the motor control center) is said to be within the zone of influence of the source (the ceiling panel). A significant interaction is one that can result in damage to the target. For example, the fall of a light fixture on a 20-ft steel pipe may be credible (the light fixture being above the pipe) but may not be significant (the light fixture would not damage the steel pipe). An important aspect of the interaction review is engineering judgment because only credible and significant sources of interaction should be considered in the condition assessment.

13.2.2 Classification of Acceleration-Sensitive and Deformation-Sensitive Components Nonstructural components shall be classified based on their response sensitivity in each primary orthogonal horizontal direction as follows:

1. Nonstructural components that are sensitive to and subject to damage from inertial loading shall be classified as acceleration-sensitive components.
2. Nonstructural components that are sensitive and subject to damage imposed by drift or deformation of the structure shall be classified as deformation sensitive.
3. Nonstructural components that are sensitive to both inertial loading and drift and deformation of the structure shall be classified as both acceleration and deformation sensitive.

C13.2.2 Classification of Acceleration-Sensitive and Deformation-Sensitive Components Classification of acceleration-sensitive or deformation-sensitive components is discussed, where necessary, in each component section—Sections 13.6, 13.7, and 13.8. The guiding principle for deciding whether a component requires a force analysis, as defined in Section 13.4, is that analysis of inertial loads generated within the component is necessary to properly consider the component's seismic behavior. The guiding principle for deciding whether a component requires a drift analysis, as defined in Section 13.4, is that analysis of drift is necessary to properly consider the component's seismic behavior. Some components may be classified as acceleration sensitive in one direction and drift sensitive in the other direction. An example is a nonstructural partition wall that is sensitive to drift in plane and acceleration out of plane.

Glazing or other components that can hazardously fail at a drift ratio less than 0.01 (depending on installation details) or components that can undergo greater distortion without hazardous failure resulting—for example, typical gypsum board partitions—should be considered.

Use of Drift Ratio Values as Acceptance Criteria The data on drift ratio values related to damage states are limited, and the use of single median drift ratio values as acceptance criteria must cover a broad range of actual conditions. It is therefore suggested that the limiting drift values shown in this chapter be used as a guide for evaluating the probability of a given damage state for a subject building, but they should not be used as absolute acceptance criteria. At higher Nonstructural Performance Levels, it is likely that the criteria for nonstructural deformation-sensitive components may control the structural retrofit design. These criteria should be regarded as a flag for the careful evaluation of structural and/or nonstructural interaction and consequent damage states, rather than the required imposition of absolute acceptance criteria that might require costly redesign of the structural retrofit.

13.3 COMPONENT EVALUATION

Nonstructural components shall be evaluated to achieve the Performance Objective selected in accordance with Section 2.2. Analysis, evaluation, and retrofit requirements for the Life Safety and Position Retention Nonstructural Performance Levels for the appropriate level of seismicity shall be as specified in Table 13-1. Seismic forces shall be calculated in accordance with Section 13.4.3, and seismic deformations shall be calculated in accordance with Section 13.4.4.

Acceptance criteria for nonstructural components being evaluated to the Life Safety and Position Retention Nonstructural Performance Levels shall be based on criteria listed in Sections 13.6 through 13.8. Forces on bracing and connections for nonstructural components calculated in accordance with Section 13.4 shall be compared with capacities using strength design procedures.

Analysis, evaluation, and retrofit requirements for the Operational Nonstructural Performance Level shall be based on the requirements of this standard, augmented with the requirements of ASCE 7 Chapter 13 requirements, assuming that all nonstructural elements have a component importance factor, I_p, of 1.5.

In a base-isolated structure, nonstructural components located at or above the isolation interface shall comply with the requirements in Section 14.2.6.2.1. Nonstructural components that cross the isolation interface shall comply with the requirements of Section 14.2.6.2.2. Nonstructural components located below the isolation interface shall comply with the requirements of this chapter.

C13.3 COMPONENT EVALUATION

The provisions in ASCE 7 for components that are required to be designed with a component importance factor, I_p, of 1.5 are the most comprehensive criteria for the Operational Nonstructural Performance Level. In addition to requirements for anchorage and bracing, there are requirements for the design, evaluation, and testing of the components to certify that they can function immediately after the design seismic scenario. Evaluation, retrofit, and acceptance criteria for the Position Retention Nonstructural Performance Level may be used for the Operational Nonstructural Performance Level if more appropriate data are not available.

Forces on nonstructural components calculated in accordance with Section 13.4 are at a strength design level. Where allowable stress values are available for proprietary products used as bracing for nonstructural components, these values shall be factored up to strength design levels. In the absence of manufacturers' data on strength values, allowable stress values can be increased by a factor of 1.4 to obtain strength design values.

In cases where the BPOE or BPON is not required—such as where the Reduced Performance Objective is selected—there may be more latitude in the selection of components or criteria for nonstructural retrofit.

13.4 EVALUATION AND RETROFIT PROCEDURES

One of the following evaluation procedures for nonstructural components shall be selected based on the requirements of Table 13-1:

1. Analytical procedure; or
2. Prescriptive procedure.

13.4.1 Analytical Procedure Where the prescriptive procedure is not permitted based on Table 13-1, forces and deformations on nonstructural components shall be calculated as follows:

1. If a force analysis only is permitted by Table 13-1, seismic forces shall be calculated in accordance with Section 13.4.3.
2. If a deformation analysis only is permitted by Table 13-1, drift ratios or relative displacements shall be calculated in accordance with Section 13.4.4.
3. If both force and deformation analysis are required by Table 13-1, then seismic forces shall be calculated in accordance with Section 13.4.3 and drift ratios or relative displacements shall be calculated in accordance with Section 13.4.4. The deformation and associated drift ratio of the structural component(s) to which the deformation-sensitive nonstructural component is attached shall be determined in accordance with Chapter 3.
4. Alternatively, the calculation of seismic forces and deformations in accordance with Section 13.4.5 shall be permitted.

C13.4.1 Analytical Procedure For nonstructural components, the analytical procedure, which consists of the default equation and general equation approaches, is applicable to any case. The prescriptive procedure is limited by Table 13-1 to specified combinations of seismicity and component type for compliance with the Life Safety Nonstructural Performance Level.

13.4.2 Prescriptive Procedure Where the prescriptive procedure is permitted in Table 13-1, the characteristics of the nonstructural component shall be compared with characteristics as specified in approved codes and standards referenced in Sections 13.6 through 13.8.

C13.4.2 Prescriptive Procedure A prescriptive procedure consists of published standards and references that describe the design concepts and construction features that must be present for a given nonstructural component to be seismically protected. No engineering calculations are required in a prescriptive procedure, although in some cases an engineering review of the design and installation is required.

Suggested references for prescriptive requirements are listed in the Commentary of the "Component Behavior and Retrofit Methods" subsections of Sections 13.6 through 13.8 for each component type.

13.4.3 Force Analysis: General Equations

13.4.3.1 Horizontal Seismic Forces Horizontal seismic forces on nonstructural components shall be determined in accordance with Eq. (13-1) or (13-5).

$$F_p = \frac{0.4 a_p S_{XS} W_p \left(1 + \frac{2x}{h}\right)}{\left(\frac{R_p}{I_p}\right)} \tag{13-1}$$

F_p calculated in accordance with Eq. (13-1) shall be based on the stiffness of the component and the ductility of its bracing and anchorage, but it need not exceed the default value of F_p calculated in accordance with Eq. (13-2) and shall not be less than F_p computed in accordance with Eq. (13-3).

$$F_p(\text{maximum}) = 1.6 S_{XS} I_p W_p \tag{13-2}$$

$$F_p(\text{minimum}) = 0.3 S_{Xs} I_p W_p \tag{13-3}$$

where W_p = Component operating weight;
a_p = Component amplification factor from Table 13-2;
F_p = Component seismic force applied horizontally at the center of gravity of the component and distributed according to the mass distribution of the component;
S_{XS} = Spectral response acceleration parameter at short periods for any Seismic Hazard Level and any damping determined in accordance with Section 2.4.1.6 or 2.4.2.1.6;
h = Average roof elevation of structure, relative to grade elevation;
R_p = Component response modification factor from Table 13-2;
x = Elevation in structure of the average point of attachment of the component to the structure. For items attached at or below grade, the value of x shall be taken as 0. The value of x shall never exceed h; and
I_p = Component importance factor, as set forth in Sections 13.6–13.8.

Table 13-2. Nonstructural Component Amplification and Response Modification Factors

Architectural Components (Section 13.6)	a_p[a]	R_p[b]
Interior nonstructural walls and partitions[c]		
Plain masonry walls	1.0	1.5
All other walls and partitions	1.0	2.5
Cantilever components, unbraced or braced (to structural frame) below their centers of mass		
Parapets and cantilevered interior nonstructural walls	2.5	2.5
Chimneys and stacks where laterally supported by structures	2.5	2.5
Cantilever components, braced (to structural frame) above their centers of mass		
Parapets	1.0	2.5
Chimneys and stacks	1.0	2.5
Exterior nonstructural walls[c]	1.0	2.5
Exterior nonstructural wall components and connections[c]		
Wall component	1.0	2.5
Body of wall-panel connections	1.0	2.5
Fasteners of the connecting system	1.25	1.0
Veneer		
High deformability components and attachments	1.0	2.5
Low deformability components and attachments	1.0	2.5
Penthouses (except where framed by an extension of the building frame)	2.5	3.5
Ceilings		
All	1.0	2.5
Cabinets and shelving		
Permanent floor-supported storage cabinets over 6 ft (1,829 mm) tall, including contents	1.0	2.5
Permanent floor-supported library shelving, book stacks, and bookshelves over 6 ft (1,829 mm) tall, including contents	1.0	2.5
Laboratory equipment	1.0	2.5
Storage racks[d]	2.5	4.0
Access floors		
Special access floors	1.0	2.5
All other	1.0	1.5
Appendages and ornamentation	2.5	2.5
Signs and billboards	2.5	2.5
Stairways	1.0	2.5
Other rigid components		
High deformability components and attachments	1.0	3.5
Limited deformability components and attachments	1.0	2.5
Low deformability components and attachments	1.0	1.5
Other flexible components		
High deformability components and attachments	2.5	3.5
Limited deformability components and attachments	2.5	2.5
Low deformability components and attachments	2.5	1.5
Mechanical and Electrical Components (Section 13.7)		
Wet-side HVAC, boilers, furnaces, atmospheric tanks and bins, chillers, water heaters, heat exchangers, evaporators, air separators, manufacturing or process equipment, and other mechanical components constructed of high deformability materials	1.0	2.5
Engines, turbines, pumps, compressors, and pressure vessels not supported on skirts	1.0	2.5
Skirt-supported pressure vessels	2.5	2.5
Elevator and escalator components	1.0	2.5
Generators, batteries, inverters, motors, transformers, and other electrical components constructed of high deformability materials	1.0	2.5
Motor control centers, panel boards, switch gear, instrumentation cabinets, and other components constructed of sheet metal framing	2.5	6.0
Communication equipment, computers, instrumentation, and controls	1.0	2.5
Roof-mounted chimneys, stacks, and cooling and electrical towers laterally braced below their center of mass	2.5	3.0
Roof-mounted chimneys, stacks, and cooling and electrical towers laterally braced above their center of mass	1.0	2.5
Lighting fixtures	1.0	1.5
Other mechanical or electrical components	1.0	1.5
Vibration Isolated Components and Systems[e]		
Components and systems isolated using neoprene components and neoprene isolated floors with built-in or separate elastomeric snubbing devices or resilient perimeter stops	2.5	2.5
Spring-isolated components and systems and vibration-isolated floors closely restrained using built-in or separate elastomeric snubbing devices or resilient perimeter stops	2.5	2.0
Internally isolated components and systems	2.5	2.0
Suspended vibration-isolated equipment, including in-line duct devices and suspended internally isolated components	2.5	2.5
Distribution Systems		
Piping in accordance with ASME B31, including in-line components with joints made by welding or brazing	2.5	12.0
Piping in accordance with ASME B31, including in-line components, constructed of high or limited deformability materials, with joints made by threading, bonding, compression couplings, or grooved couplings	2.5	6.0
Piping and tubing not in accordance with ASME B31, including in-line components, constructed of high deformability materials, with joints made by welding or brazing	2.5	9.0
Piping and tubing not in accordance with ASME B31, including in-line components, constructed of high or limited deformability materials, with joints made by threading, bonding, compression couplings, or grooved couplings	2.5	4.5
Piping and tubing constructed of low deformability materials, such as cast iron, glass, and nonductile plastics	2.5	3.0
Ductwork, including in-line components, constructed of high deformability materials, with joints made by welding or brazing	2.5	9.0
Ductwork, including in-line components, constructed of high or limited deformability materials with joints made by means other than welding or brazing	2.5	6.0
Ductwork, including in-line components, constructed of low deformability materials, such as cast iron, glass, and nonductile plastics	2.5	3.0
Bus ducts, rigidly mounted cable trays, and plumbing	1.0	2.5
Manufacturing or process conveyors (nonpersonnel)	2.5	3.0
Electrical conduit and suspended cable trays	2.5	6.0
Furnishings and Interior Equipment (Section 13.8)		
Hazardous materials storage	2.5	1.0
Manufacturing or process conveyors (nonpersonnel)	2.5	3.0
See Architectural Components for all other		

[a]A lower value for a_p is permitted where justified by detailed dynamic analyses. The value for a_p shall not be less than 1.0. The value of a_p equal to 1.0 is for rigid components and rigidly attached components. The value of a_p equal to 2.5 is for flexible components and flexibly attached components. Eq. (13-4) can be used to determine the period of the component system.

[b]The value of R_p used to determine the forces in the connected part shall not exceed 1.5 unless the component anchorage is governed by the strength of a ductile steel component.

[c]Where flexible diaphragms provide lateral support for concrete or masonry walls or partitions, the forces for anchorage to the diaphragm shall be as specified in Section 7.2.11.1.

[d]Storage racks over 6 ft high shall be designed in accordance with the provisions of Section 13.8.1.

[e]Components mounted on vibration isolators shall have a bumper restraint or snubber in each horizontal direction. The force shall be taken as $2F_p$ if the nominal clearance (air gap) between the equipment support frame and restraint is greater than 1/4 in. If the nominal clearance specified on the construction documents is not greater than 1/4 in., the force may be taken as F_p.

The fundamental period of vibration of the nonstructural component (T_p) in each direction shall be estimated using Eq. (13-4).

$$T_p = 2\pi\sqrt{\frac{W_p}{K_p g}} \tag{13-4}$$

where T_p = Component fundamental period;
W_p = Component operating weight;
g = Gravitational acceleration; and
K_p = Approximate stiffness of the support system of the component, its bracing, and its attachment, determined in terms of load per unit deflection at the center of gravity of the component.

In lieu of Eq. (13-1), nonstructural seismic forces shall be permitted to be calculated based on Eq. (13-5).

$$F_p = \frac{a_p A_x W_p}{\frac{R_p}{I_P}} \tag{13-5}$$

where a_p = Component amplification factor determined based on the dynamic interaction between the nonstructural component and the building vibrational characteristics; in lieu of a rigorous analysis, the value of a_p may be obtained from Table 13-2;
R_p = Component response modification factor from Table 13-2;
I_p = Component importance factor, set forth in Sections 13.6–13.8; and
A_x = Story acceleration at level x calculated based on a linear or nonlinear dynamic analysis of the building in accordance with Section 7.4.2 or 7.4.4; in lieu of a rigorous analysis, the value of A_x may be obtained using Eq. (13-6).

$$A_x = 0.4 S_{XS}\left(1 + \frac{2x}{h}\right) \tag{13-6}$$

where S_{Xs} = 5% damped spectral response acceleration parameter at short periods for a given Seismic Hazard Level determined in accordance with Section 2.4.1.6 or 2.4.2.1.6;
h = Average roof elevation of structure, relative to grade elevation; and
x = Elevation in structure of the center of gravity of the component relative to grade elevation. For items attached at or below grade, the value of x shall be 0. The value of x shall never exceed h.

C13.4.3.1 Horizontal Seismic Forces The nonstructural force in Eq. (13-1) assumes that the story accelerations vary as a triangular distribution over the height of the building. For mid-rise and low-rise buildings, this assumption is generally adequate. For buildings taller than about six stories with periods greater than 1 s, the story accelerations are more uniform over the height of the building, except at the roof level.

The value of x to use in Eq. (13-1) can vary depending on the direction of load being considered. An exterior wall panel, for example, may have rigid connections at the base and push–pull connections at the top. For in-plane loading, the point of attachment would be at the bottom of the panel. For out-of-plane loading, the average point of attachment would be halfway between the top connection and the bottom connection.

Seismic forces for nonstructural components are generated based on three effects: the ground acceleration at the base of the building, the ratio of the floor acceleration at the location of the nonstructural component to the ground acceleration, and the dynamic amplification caused by resonance between the nonstructural component and the building response. Eq. (13-1) provides an estimate of the horizontal acceleration of a nonstructural component. The peak ground acceleration is calculated as 0.4 times the short-period response acceleration (S_{XS}).

The ratio of the floor acceleration at the location of the nonstructural component is based on a linearly increasing variation of acceleration over the height of the building. The term $(1 + 2x/h)$ is used to calculate this variation based on a linear variation of floor accelerations over the height of the building and is based on an assumed first mode response of a building with uniform stiffness and mass. For buildings that have significant higher mode response, this linearly increasing assumption may overestimate the acceleration at floors below the roof. A linear dynamic analysis using a response spectrum can be used as an alternate method of estimating the variation of floor accelerations.

The a_p factor provides an estimate of the dynamic amplification caused by the resonance of response of the nonstructural component with one of the modes of vibration of the building. Table 13-2 provides an estimate of this amplification for most nonstructural components. In Table 13-2, components assumed to be rigid are assigned an a_p value of 1, and components assumed to be flexible are assigned an a_p value of 2.5. A period of vibration of 0.06 s, which may be calculated in accordance with Eq. (13-4), is used to distinguish between rigid and flexible components. The engineer should verify that the a_p value used is appropriate for the actual component and its support system.

For many buildings, the primary mode of vibration in each direction has the most influence on the dynamic amplification of nonstructural components. For buildings with primary mode periods greater than 1 s, the second or third mode of vibration may also cause some dynamic amplification.

Eq. (13-5) provides a slightly revised form of Eq. (13-1) for use where checking nonstructural components. In Eq. (13-5), the factor (a_p) is defined as the dynamic amplification factor considering resonance of the nonstructural component with one of the modes of the building. The intent is to consider this dynamic amplification effect for nonstructural components for Position Retention Performance Level. Guidelines for considering this effect are provided in the Tri-Services' *Seismic Design for Buildings* (TM 5-809-10 1986) and *Seismic Design Guidelines for Essential Buildings* (TM 5-809-10-1 1986). Other approved procedures could also be used. It is permissible to use the a_p factors from Table 13-2.

Eq. (13-6) also provides a factor, A_x, which represents the floor accelerations. The intent is that a linear dynamic analysis of the building be performed to determine the actual story accelerations based on the ground motion considered for a sufficient number of modes of vibration for the range of periods of vibration of the nonstructural components to be designed. The modal story accelerations can be combined using standard modal combination procedures. Linear dynamic analysis procedures are considered sufficiently accurate for estimating the story accelerations for Life Safety and Position Retention Performance Levels. For the Operational Performance Level, where greater accuracy in prediction of floor accelerations can be important, nonlinear dynamic analysis may be preferred.

13.4.3.2 Vertical Seismic Forces Where specifically required by Sections 13.6, 13.7, and 13.8, vertical seismic forces on nonstructural components shall be determined in accordance with Eq. (13-7).

F_p calculated in accordance with Eq. (13-7) need not exceed F_p calculated in accordance with Eq. (13-2) and shall not be less than F_{pv} (minimum) computed in accordance with Eq. (13-7).

$$F_{pv} = 0.2 S_{XS} W_p \tag{13-7}$$

where F_{pv} = Component seismic force applied vertically at the center of gravity of the component or distributed according to the mass distribution of the component.

All other terms in Eq. (13-7) shall be as defined in Section 13.4.3.1.

13.4.3.3 Load Combinations The nonstructural forces shall be determined based on following load combinations:

$$Q_{utf} = 1.2 W_p + F_{pv} +/- F_p \tag{13-7a}$$

$$Q_{utf} = 0.9 W_p - F_{pv} +/- F_p \tag{13-7b}$$

13.4.4 Deformation Analysis Where nonstructural components are anchored by connection points at different levels, x and y, on the same building or structural system, drift ratios (D_r) shall be calculated in accordance with Eq. (13-8).

$$D_r = (\delta_{xA} - \delta_{yA})/(X - Y) \tag{13-8}$$

Where nonstructural components are anchored by connection points on separate buildings or structural systems at the same level x, relative displacements (D_p) shall be calculated in accordance with Eq. (13-9).

$$D_p = |\delta_{xA}| + |\delta_{xB}| \tag{13-9}$$

where D_p = Relative seismic displacement;
D_r = Drift ratio;
X = Height of upper support attachment at level x as measured from grade;
Y = Height of lower support attachment at level y as measured from grade;
δ_{xA} = Deflection at level x of Building A, determined by analysis as defined in Chapter 7;
δ_{yA} = Deflection at level y of Building A, determined by analysis as defined in Chapter 7;
δ_{xB} = Deflection at level x of Building B, determined by analysis as defined in Chapter 7 or equal to 0.03 times the height, X, of level x above grade or as determined using other approved approximate procedures.

The effects of seismic displacements shall be considered in combination with displacements caused by other loads that are present.

13.4.5 Component Testing As an alternative to the analytical requirements of Section 13.4.3, testing shall be deemed an acceptable method to verify the seismic performance of components and their supports and attachments for the Position Retention Nonstructural Performance Level. Seismic qualification by testing based upon a nationally recognized testing procedure, such as ICC-ES AC-156, acceptable to the authority having jurisdiction shall be deemed to satisfy the evaluation or retrofit requirements, provided that the substantiated seismic capacities equal or exceed the seismic demands determined in accordance with Section 13.4.3.1.

13.5 RETROFIT APPROACHES

Nonstructural retrofit shall be accomplished by approved methods based on the classification of the nonstructural component and the Performance Level desired for the nonstructural component.

1. For the retrofit of nonstructural components that are acceleration sensitive, the retrofit approach shall provide appropriate anchorage or bracing. If the nonstructural component itself is deficient, the component may need to be strengthened, so strengthening should be added to the retrofit option.
2. For the retrofit of nonstructural components that are deformation sensitive, the retrofit approach shall provide for sufficient deformation capability for the nonstructural components to allow the nonstructural component to undergo the calculated deformation while maintaining position.

C13.5 RETROFIT APPROACHES

A general set of alternate methods for the retrofit of nonstructural components includes replacement, strengthening, repair, bracing, and anchorage, as described below. However, the choice of retrofit technique and its design is the responsibility of the design professional, and use of alternative approaches to those noted below or otherwise customarily in use is acceptable, provided that it can be shown to the satisfaction of the building official that the acceptance criteria are met.

For the Life Safety Performance Level, most nonstructural components that are acceleration sensitive should be retrofit considering position retention. Nonstructural components that are drift sensitive should be retrofit to allow for imposed deformation. Nonstructural components that are drift sensitive need not be designed to prevent damage to the nonstructural component or its attachments, provided that stability of the component is maintained. Components that are both acceleration sensitive in one direction and drift sensitive in the other direction should be retrofit considering both effects.

Replacement Replacement involves the complete removal of the component and its connections and its replacement by new components; for example, the removal of exterior cladding panels, the installation of new connections, and installation of new panels. As with structural components, the installation of new nonstructural components as part of a seismic retrofit project should be the same as for new construction.

Strengthening Strengthening involves additions to the component to improve its strength to meet the required force levels; for example, additional members might be welded to a support to prevent buckling.

Repair Repair involves the repair of any damaged parts or members of the component to enable the component to meet its acceptance criteria; for example, some corroded attachments for a precast concrete cladding system might be repaired and replaced without removing or replacing the entire panel system.

Bracing Bracing involves the addition of members and attachments that brace the component internally or to the building structure. A suspended ceiling system might be retrofitted by the addition of diagonal wire bracing and vertical compression struts.

Attachment Attachment refers to methods that are primarily mechanical, such as bolting, by which nonstructural components are attached to the structure or other supporting components. Typical attachments are the bolting of items of mechanical equipment to a reinforced concrete floor or base. Supports and attachments for mechanical and electrical equipment should be

designed according to accepted engineering principles. The following guidelines are recommended:

1. Attachments and supports transferring seismic loads should be constructed of materials suitable for the application and should be designed and constructed in accordance with a nationally recognized standard.
2. Attachments embedded in concrete should be suitable for cyclic loads.
3. Rod hangers may be considered seismic supports if the length of the hanger from the supporting structure is 12 in. or less. Rod hangers should not be constructed in a manner that would subject the rod to bending moments.
4. Seismic supports should be constructed so that support engagement is maintained.
5. Friction clips should not be used for anchorage attachment.
6. Expansion anchors should not be used for mechanical equipment rated over 10 hp, unless undercut expansion anchors are used.
7. Drilled and grouted-in-place anchors for tensile load applications should use either expansive cement or expansive epoxy grout.
8. Supports should be specifically evaluated if weak-axis bending of cold-formed support steel is relied on for the seismic load path.
9. Components mounted on vibration isolation systems should have a bumper restraint or snubber in each horizontal direction.
10. Oversized washers should be used at bolted connections through the base sheet metal if the base is not reinforced with stiffeners.
11. Lighting fixtures resting in a suspended ceiling grid may be retrofitted by adding wires that directly attach the fixtures to the floor above, or to the roof structure, to prevent their falling.

13.6 ARCHITECTURAL COMPONENTS: DEFINITION, BEHAVIOR, AND ACCEPTANCE CRITERIA

13.6.1 Exterior Wall Components

13.6.1.1 Adhered Veneer

13.6.1.1.1 Definition and Scope Adhered veneer shall include the following types of exterior finish materials secured to a backing material, which shall be masonry, concrete, cement plaster, or a structural framework material, by adhesives:

1. Tile, masonry, stone, terracotta, or other similar materials;
2. Glass mosaic units;
3. Ceramic tile; and
4. Exterior plaster (stucco).

C13.6.1.1.1 Definition and Scope Adhered veneers are generally thinner materials, although thicker veneers, especially masonry, stone, and terracotta, may be encountered. The behavior of these systems is dominated by the backup system to which the veneer is adhered. Although the behavior of the thicker veneers is still dominated by the behavior of the backup systems, the threat to life safety caused by failure may rise significantly for thicker, heavier veneers because of failures of the substrate bonding the veneer to the backup systems. The height of the veneer and the likely size of falling fragments should be considered.

Tile, masonry, stone, terracotta, and similar materials are typically less than 1 in. thick. Glass mosaic blocks are typically 2 in. by 2 in. by 3/8 in. thick and are a type of adhered veneer. Veneer larger than these blocks likely would require direct attachment to the backup system, as opposed to simply being adhered to it, and thus should be considered anchored veneer and evaluated per Section 13.6.1.2.

13.6.1.1.2 Component Behavior and Retrofit Methods Adhered veneer shall be considered acceleration sensitive in its out-of-plane direction and deformation sensitive in plane.

Adhered veneer not conforming to the acceptance criteria of Section 13.6.1.1.3 shall be retrofitted in accordance with Section 13.5.

C13.6.1.1.2 Component Behavior and Retrofit Methods Adhered veneers are predominantly deformation sensitive. Deformation of the substrate leads to cracking or separation of the veneer from its backing. Poorly adhered veneers may be dislodged by direct acceleration.

Nonconformance requires limiting drift, special detailing to isolate substrate from structure to permit drift, or replacement with drift-tolerant material. Poorly adhered veneers should be replaced.

13.6.1.1.3 Acceptance Criteria Acceptance criteria shall be applied in accordance with Section 13.3.

1. **Life Safety Nonstructural Performance Level.** The backup system shall be adequately anchored to resist seismic forces computed in accordance with Section 13.4.3. The drift ratio, calculated in accordance with Section 13.4.4, shall be limited to 0.02.
2. **Position Retention Nonstructural Performance Level.** The veneer and backup system shall conform to the requirements of Section 13.5.3 of ASCE 7. The backup system shall be adequately attached to resist seismic forces computed in accordance with Section 13.4.3 of this standard. The drift ratio computed in accordance with Section 13.4.4 shall be limited to 0.02.
3. **Operational Nonstructural Performance Level.** The veneer and backup system shall conform to the requirements of Section 13.5.3 of ASCE 7. The backup system shall be adequately attached to resist seismic forces computed in accordance with Section 13.4.3 of this standard. The drift ratio computed in accordance with Section 13.4.4, with $(\delta_{xA} - \delta_{yA})$ not less than 0.5 in., shall be limited to 0.01.

13.6.1.1.4 Evaluation Requirements Adhered veneer shall be evaluated by visual observation and tapping to discern looseness or cracking.

C13.6.1.1.4 Evaluation Requirements Tapping may indicate either defective bonding to the substrate or excessive flexibility of the supporting structure.

13.6.1.2 Anchored Veneer

13.6.1.2.1 Definition and Scope Anchored veneer shall include the following types of masonry or stone units that are attached to the supporting structure by mechanical means:

1. Masonry units;
2. Stone units; and
3. Stone slab units.

The provisions of this section shall apply to units that are more than 48 in. above the ground or the adjacent exterior area.

C13.6.1.2.1 Definition and Scope Masonry units are typically 5 in. or fewer thick. Stone slab units are typically 2 in. or fewer thick.

13.6.1.2.2 Component Behavior and Retrofit Methods Anchored veneer shall be considered acceleration sensitive in the out-of-plane direction and deformation sensitive in plane.

Anchored veneer and connections not conforming to the acceptance criteria of Section 13.6.1.2.3 shall be retrofitted in accordance with Section 13.5.

C13.6.1.2.2 Component Behavior and Retrofit Methods Anchored veneer is both acceleration and deformation sensitive. Heavy units can be dislodged by direct out-of-plane acceleration, which distorts or fractures the mechanical connections. Special attention should be paid to corners and around openings, which are likely to experience large deformations. In-plane or out-of-plane deformations of the supporting structure, particularly if it is a frame, may similarly affect the connections, and the units may be displaced or dislodged by racking. Thick anchored veneer may posses significant in-plane stiffness, which can greatly amplify the demands placed on the connections if the supporting structure racks.

Drift analysis is necessary to establish conformance with drift acceptance criteria related to performance level. The drift analysis should consider the construction and behavior of the veneer and its backing to assess the individual parts of the nonstructural component that are required to deform to accommodate the required drift. These parts of the nonstructural component should be checked for their capability to allow for the calculated deformation of the structure. Nonconformance requires limiting structural drift, or special detailing to isolate substrate from structure to permit drift. Defective connections must be replaced.

13.6.1.2.3 Acceptance Criteria Acceptance criteria shall be applied in accordance with Section 13.3.

1. **Life Safety Nonstructural Performance Level.** The backup systems and the veneer's anchorage to the backup system shall be adequately anchored to resist seismic forces computed in accordance with Section 13.4.3 using a component importance factor, I_p, of 1.0. The drift ratio calculated in accordance with Section 13.4.4 shall be limited to 0.02.
2. **Position Retention Nonstructural Performance Level.** The veneer and backup system shall conform to the requirements of Sections 13.5.3 and 14.4.6 of ASCE 7. The backup systems and the veneer's anchorage to the backup system shall be adequately attached to resist seismic forces computed in accordance with Section 13.4.3 using a component importance factor, I_p, of 1.0. The drift ratio computed in accordance with Section 13.4.4, with $(\delta_{xA} - \delta_{xB})$ not less than 0.5 in., shall be limited to 0.02.
3. **Operational Nonstructural Performance Level.** The veneer and backup system shall conform to the requirements of Sections 13.5.3 and 14.4.6 of ASCE 7. The backup systems and the veneer's anchorage to the backup system shall be adequately attached to resist seismic forces computed in accordance with Section 13.4.3 using a component importance factor, I_p, of 1.5. The drift ratio computed in accordance with Section 13.4.4, with $(\delta_{xA} - \delta_{yA})$ not less than 0.5 in., shall be limited to 0.01.

C13.6.1.2.3 Acceptance Criteria As an alternative to the drift limits in Section 13.6.1.2.3, the nonstructural component and its backing can be shown by approved testing or analysis to meet the intended performance level for the calculated drift.

13.6.1.2.4 Evaluation Requirements Veneer units shall have adequate stability, joint detailing, and maintenance to prevent moisture penetration from weather that could destroy the anchors. There shall be sufficient support for the veneer over openings. There shall be sufficient connection of the veneer to the backup system over weakened planes. The anchors shall be visually inspected and tested to determine capacity if any signs of deterioration are visible.

13.6.1.3 Glass Block Units and Other Nonstructural Masonry

13.6.1.3.1 Definition and Scope Glass block and other units that are self-supporting for static vertical loads, held together by mortar, and structurally detached from the surrounding structure shall be retrofitted in accordance with this section.

13.6.1.3.2 Component Behavior and Retrofit Methods Glass block units and other nonstructural masonry shall be considered both acceleration and deformation sensitive.

Retrofit of individual walls less than 144 ft^2 or 15 ft in any dimension using prescriptive procedures based on Section 2110 of IBC shall be permitted. For walls larger than 144 ft^2 or 15 ft in any dimension, the analytical procedure shall be used.

Glass block units and other nonstructural masonry not conforming with the requirements of Section 13.6.1.3.3 shall be retrofitted in accordance with Section 13.5.

C13.6.1.3.2 Component Behavior and Retrofit Methods Glass block and nonstructural masonry are both acceleration and deformation sensitive. Failure in plane generally occurs by deformation in the surrounding structure that results in unit cracking and displacement along the cracks. Failure out of plane takes the form of dislodgment or collapse caused by direct acceleration.

Nonconformance with deformation criteria requires limiting structural drift or special detailing to isolate the glass block wall from the surrounding structure to permit the required drift. The drift analysis should consider the construction and behavior of the veneer and its backing to assess the individual parts of the nonstructural component that are required to deform to accommodate the required drift. These parts of the nonstructural component should be checked for their capability to allow for the calculated deformation of the structure. Sufficient reinforcing must be provided to deal with out-of-plane forces. Large walls may need to be subdivided by additional structural supports into smaller areas that can meet the drift or force criteria.

13.6.1.3.3 Acceptance Criteria Acceptance criteria shall be applied in accordance with Section 13.3.

1. **Life Safety Nonstructural Performance Level.** Glass block and other nonstructural masonry walls and their enclosing framing shall be capable of resisting both in-plane and out-of-plane forces computed in accordance with Section 13.4.3 using a component importance factor, I_p, of 1.0 or shall meet the requirements of the prescriptive procedure if permitted. The drift ratio calculated in accordance with Section 13.4.4 shall be limited to 0.02.
2. **Position Retention Nonstructural Performance Level.** The glass block and other nonstructural masonry wall systems shall conform to the requirements of Section 13.5.3 of ASCE 7. Glass block and other nonstructural masonry walls and their enclosing framing shall be capable of resisting both in-plane and out-of-plane forces computed in accordance with Section 13.4.3 using a component importance factor, I_p, of 1.0. The drift ratio calculated in accordance with Section 13.4.4, with $(\delta_{xA} - \delta_{yA})$ not less than 0.5 in., shall be limited to 0.02.
3. **Operational Nonstructural Performance Level.** The glass block and other nonstructural masonry wall systems shall conform to the requirements of Section 13.5.3 of

ASCE 7. Glass block and other nonstructural masonry walls and their enclosing framing shall be capable of resisting both in-plane and out-of-plane forces computed in accordance with Section 13.4.3 using a component importance factor, I_p, of 1.5. The drift ratio calculated in accordance with Section 13.4.4, with $(\delta_{xA} - \delta_{yA})$ not less than 0.5 in., shall be limited to 0.01.

13.6.1.3.4 Evaluation Requirements Glass block units and other nonstructural masonry shall be evaluated based on the criteria of Section 2110 of IBC.

13.6.1.4 Prefabricated Panels

13.6.1.4.1 Definition and Scope The following types of prefabricated panels designed to resist wind, seismic, and other applied forces shall be retrofitted in accordance with this section:

1. Precast concrete and concrete panels with facing (generally stone) laminated or mechanically attached;
2. Laminated metal-faced insulated panels; and
3. Steel strong-back panels with insulated, water-resistant facing, or mechanically attached metal or stone facing.

C13.6.1.4.1 Definition and Scope Prefabricated panels are generally attached at discrete locations around their perimeters to the structural framing with mechanical connections.

13.6.1.4.2 Component Behavior and Retrofit Methods Prefabricated panels shall be considered acceleration sensitive in the out-of-plane direction and deformation sensitive in plane.

Prefabricated panels not conforming to the acceptance criteria of Section 13.6.1.4.3 shall be retrofitted in accordance with Section 13.5.

C13.6.1.4.2 Component Behavior and Retrofit Methods Lightweight panels may be damaged by racking; heavy panels may be dislodged by direct acceleration, which distorts or fractures the mechanical connections. The imposed in-plane and out-of-plane deformations are generally accommodated by the connections and not by the prefabricated panels. These connections need to be checked for the detailing to accommodate the required drift. This check is generally accomplished by a connection detailed to allow sliding with a slotted or oversize hole. Drift can also be accommodated by deformation of the connections.

Excessive deformation of the supporting structure—most likely if it is a frame—may result in the panels imposing external racking forces on one another and distorting or fracturing their connections, with consequent displacement or dislodgment.

Drift analysis is necessary to establish conformance with drift acceptance criteria related to the Nonstructural Performance Level. The drift analysis should consider the construction and behavior of the panel and its connections to assess the individual parts of the nonstructural component that are required to deform to accommodate the required drift.

Nonconformance requires limiting structural drift, or special detailing to isolate panels from the structure to permit the required drift; this method generally requires panel removal. Defective connections must be replaced.

13.6.1.4.3 Acceptance Criteria Acceptance criteria shall be applied in accordance with Section 13.3.

1. **Life Safety Nonstructural Performance Level.** Prefabricated panels and connections shall be capable of resisting in-plane and out-of-plane forces computed in accordance with Section 13.4.3 using a component importance factor, I_p, of 1.0. The drift ratio computed in accordance with Section 13.4.4 shall be limited to 0.02.
2. **Position Retention Nonstructural Performance Level.** Prefabricated panels and connections shall conform to the requirements of Section 13.5.3 of ASCE 7. Prefabricated panels and connections shall be capable of resisting in-plane and out-of-plane forces computed in accordance with Section 13.4.3 using a component importance factor, I_p, of 1.0. The drift ratio computed in accordance with Section 13.4.4, with $(\delta_{xA} - \delta_{yA})$ not less than 0.5 in., shall be limited to 0.02.
3. **Operational Nonstructural Performance Level.** Prefabricated panels and connections shall conform to the requirements of Section 13.5.3 of ASCE 7. Prefabricated panels and connections shall be capable of resisting in-plane and out-of-plane forces computed in accordance with Section 13.4.3 using a component importance factor, I_p, of 1.5. The drift ratio computed in accordance with Section 13.4.4, with $(\delta_{xA} - \delta_{yA})$ not less than 0.5 in., shall be limited to 0.01.

13.6.1.4.4 Evaluation Requirements Connections shall be visually inspected and tested to determine capacity if any signs of deterioration or displacement are visible.

13.6.1.5 Glazed Exterior Wall Systems

13.6.1.5.1 Definition and Scope Glazed exterior wall systems shall include the following types of assemblies:

1. Glazed curtain wall systems that extend beyond the edges of structural floor slabs and are assembled from prefabricated units (e.g., "unitized" curtain wall systems) or assembled on site (e.g., "stick" curtain wall systems);
2. Glazed storefront systems that are installed between structural floor slabs and are prefabricated or assembled on site; and
3. Structural silicone glazing in which silicone sealant is used for the structural transfer of loads from the glass to its perimeter support system and for the retention of the glass in the opening.

C13.6.1.5.1 Definition and Scope The following types of glass are used within each of the glazed exterior wall systems:

1. Annealed glass;
2. Heat-strengthened glass;
3. Fully tempered glass;
4. Laminated glass; and
5. Sealed insulating glass units.

The use of some of these glass types is regulated in building codes.

There are two glazing methods for installing glass in glazed curtain wall and glazed storefront systems:

1. Wet glazing, which can use three types of materials:
   - 1.1. Preformed tape;
   - 1.2. Gunable elastomeric sealants
     - a. Noncuring and
     - b. Curing; and
   - 1.3. Putty and glazing compounds.
2. Dry glazing, which uses extruded rubber gaskets as one or both of the glazing seals.

13.6.1.5.2 Component Behavior and Retrofit Methods Glazed exterior wall systems shall be considered both deformation sensitive and acceleration sensitive.

Glazed exterior wall systems not conforming to the acceptance criteria of Section 13.6.1.5.3 shall be retrofitted in accordance with Section 13.5.

C13.6.1.5.2 Component Behavior and Retrofit Methods Glazed exterior wall systems are predominantly deformation sensitive but may also become displaced or detached by large acceleration forces. Glass components within glazed exterior wall systems are deformation sensitive. Glass performance during earthquakes, which is a function of the wall system type, glazing type, and glass type, falls into one of four categories:

1. Glass remains unbroken in its frame or anchorage;
2. Glass shatters but remains in its frame or anchorage while continuing to provide a weather barrier and remains otherwise serviceable;
3. Glass shatters and remains in its frame or anchorage in a precarious condition, liable to fall out at any time; or
4. Glass falls out of its frame or anchorage, either in fragments, shards, or whole panels.

Drift analysis and testing or compliance with prescriptive procedures are necessary to establish conformance with drift acceptance criteria related to performance level. Nonconformance requires limiting structural drift, or special detailing to isolate the glazing system from the structure to accommodate drift, or selection of a glass type that shatters safely or remains in the frame when shattered. This option would require removal of the glass or glazed wall system and replacement with an alternative design.

13.6.1.5.3 Acceptance Criteria Acceptance criteria shall be applied in accordance with Section 13.3.

1. **Life Safety Nonstructural Performance Level.** Glazed exterior wall systems and their supporting structure shall be capable of resisting seismic forces computed in accordance with Section 13.4.4. Glass components meeting any of the following criteria need not be retrofitted for the Life Safety Nonstructural Performance Level:
   1.1. Any glass component with sufficient clearance from the frame such that physical contact between the glass and the frame does not occur at the relative seismic displacement that the component shall be capable to accommodate, as demonstrated by Eq. (13-10).

$$D_{\text{clear}} \geq 1.25 D_p \tag{13-10}$$

$$D_{\text{clear}} = 2c_1\left(1 + \frac{h_p c_2}{b_p c_1}\right); \tag{13-11}$$

where h_p = height of rectangular glass;
b_p = width of rectangular glass;
c_1 = clearance (gap) between vertical glass edges and the frame;
c_2 = clearance (gap) between horizontal glass edges and the frame; and
D_p = relative seismic displacement that the component shall be capable to accommodate. D_p shall be determined similar to Eq. (13-9) over the height of the glass component under consideration.

   1.2. Fully tempered monolithic glass that is located no more than 10 ft above a walking surface.
   1.3. Annealed or heat-strengthened laminated glass in single thickness with interlayer no less than 0.03 in. that is captured mechanically in a wall system glazing pocket, and whose perimeter is secured to the wall system frame by a wet-glazed perimeter bead of 1/2-in. minimum glass contact width, or other approved anchorage system.
   1.4. Any glass component that meets the relative displacement requirement of Eq. (13-12).

$$\Delta_{\text{fallout}} \geq 1.25 D_p \tag{13-12}$$

or 0.5 in., whichever is greater, where
D_p = relative seismic displacement that the component shall be capable to accommodate; and
Δ_{fallout} = relative seismic displacement (drift) causing glass fallout from the curtain wall, storefront, or partition, as determined in accordance with an approved engineering analysis method.

2. **Position Retention Nonstructural Performance Level.** Glazed exterior wall systems and their supporting structure shall be capable of resisting seismic displacements computed in accordance with Section 13.4.4. Glass components meeting any of the following criteria need not be retrofitted for performance levels higher than the Life Safety Nonstructural Performance Level:
   2.1. Any glass component with sufficient clearance from the frame such that physical contact between the glass and the frame does not occur at the relative seismic displacement that the component shall be capable to accommodate, as demonstrated by Eq. (13-10).
   2.2. Fully tempered monolithic glass located no more than 10 ft above a walking surface need not comply with this requirement.
   2.3. Any glass component that meets the relative displacement requirement of Eq. (13-12) or 0.5 in., whichever is greater.
3. **Operational Nonstructural Performance Level.** Glazed exterior wall systems and their supporting structure shall be capable of resisting seismic displacements computed in accordance with Section 13.4.4. Glass components meeting any of the following criteria need not be retrofitted for performance levels higher than the Life Safety Nonstructural Performance Level:
   3.1. Any glass component with sufficient clearance from the frame such that physical contact between the glass and the frame does not occur at the relative seismic displacement that the component shall be capable to accommodate, as demonstrated by Eq. (13-10).
   3.2. Annealed or heat-strengthened laminated glass in single thickness with interlayer no less than 0.03 in. that is captured mechanically in a wall system glazing pocket, and whose perimeter is secured to the wall system frame by a wet-glazed perimeter bead of 0.5-in. minimum glass contact width, or other approved anchorage system.
   3.3. Any glass component that meets the relative displacement requirement of Eq. (13-13).

$$\Delta_{\text{fallout}} \geq 1.5 \times 1.25 D_p \tag{13-13}$$

or 0.5 in., whichever is greater.

C13.6.1.5.3 Acceptance Criteria D_{clear} in Eq. (13-10) is derived from a similar equation in Bouwkamp and Meehan (1960) that permits calculation of the story drift required to cause glass-to-frame contact in a given rectangular window frame. Both equations are based on the principle that a rectangular window frame (specifically one that is anchored mechanically to adjacent stories of the primary structural system of the building) becomes a parallelogram as a result of story drift and that glass-to-frame contact occurs when the length of the shorter diagonal of the parallelogram is equal to the diagonal of the glass panel itself.

The 1.25 factor in Eqs. (13-10) and (13-12) reflect uncertainties associated with calculated inelastic seismic displacements in building structures. Wright (1989) stated that "post-elastic deformations calculated using the structural analysis process may well underestimate the actual building deformation by up to 30%. It would therefore be reasonable to require the curtain wall glazing system to withstand 1.25 times the computed maximum story displacement to verify adequate performance." Wright's comments form the basis for using the 1.25 factor.

13.6.1.5.4 Evaluation Requirements To establish compliance with Criteria 1.1, 1.2, 1.3, 2.1, or 2.2 in Section 13.6.1.5.3, glazed exterior wall systems shall be evaluated visually to determine glass type, support details, mullion configuration, sealant type, and anchors. To establish compliance with Criteria 1.4 or 2.3, an approved analysis shall be used.

$\Delta_{fallout}$, which is used in Eq. (13-12), shall be determined using AAMA 501.6 or by engineering analysis.

C13.6.1.5.4 Evaluation Requirements Alternatively, to establish compliance with Criteria 1.4 or 2.3, glazed exterior wall systems may be tested in accordance with AAMA 501.4.

13.6.2 Partitions

13.6.2.1 Definition and Scope Partitions shall include vertical non-load-bearing interior components that provide space division.

Heavy partitions shall include, but are not limited to, partitions constructed of masonry materials or assemblies.

Light partitions shall include, but are not limited to, partitions constructed of metal or wood studs surfaced with lath and plaster, gypsum board, wood, or other facing materials.

C13.6.2.1 Definition and Scope Definitions such as light and heavy partitions are somewhat subjective, which is why examples are given such as masonry for heavy partitions and wood with lath and plaster for light. However, the user should make the determination of whether the partition is actually light or heavy. For example, a hollow-clay tile wall can weigh about 25 lb/ft^2 and would be considered heavy. A stud wall with cement plaster on both sides can weigh about 22 lb/ft^2. For the latter case, the user should assess the consequence of failure of the partition and whether it constitutes a Life Safety Hazard and if so, treat it as a heavy partition.

Heavy partitions include hollow-clay tile or concrete block. Only non-load-bearing partitions are considered in this section. Structural partitions, including heavy masonry partitions, shall be retrofitted in accordance with Chapter 7.

Partitions may span laterally from floor to underside of the floor or roof above, with connections at the top that may or may not allow for isolation from in-plane drift. Other partitions extend only up to a hung ceiling and may or may not have lateral bracing above that level to structural support or may be freestanding.

Modular office furnishings that include movable partitions are considered as contents rather than partitions, and as such are not within the scope of this standard.

13.6.2.2 Component Behavior and Retrofit Methods Partitions shall be considered both acceleration and deformation sensitive.

Glazed partitions that span from floor to ceiling or to the underside of the floor or roof above shall conform to the requirements of Section 13.6.1.5.

Light and heavy partitions shall be evaluated based on the provisions in Section 13.6.2.3.

Partitions not meeting the acceptance criteria of Section 13.6.2.3 shall be retrofitted in accordance with Section 13.5.

C13.6.2.2 Component Behavior and Retrofit Methods Partitions attached to the structural floors both above and below, and loaded in plane, can experience shear cracking, distortion, and fracture of the partition framing and detachment of the surface finish because of structural deformations. Similar partitions loaded out of plane can experience flexural cracking, failure of connections to structure, and collapse. The high incidence of unsupported block partitions in low and moderate seismic levels represents a significant collapse threat.

Partitions subject to deformations from the structure can be protected by providing a continuous gap between the partition and the surrounding structure, combined with attachment that provides for in-plane movement but out-of-plane restraint. Lightweight partitions that are not part of a fire-resistive system are regarded as replaceable.

13.6.2.3 Acceptance Criteria Acceptance criteria shall be applied in accordance with Section 13.3.

13.6.2.3.1 Life Safety Nonstructural Performance Level

1. **Heavy Partitions.** Nonstructural heavy partitions shall be capable of resisting out-of-plane forces computed in accordance with Section 13.4.3 using a component importance factor, I_p, of 1.0. The drift ratio computed in accordance with Section 13.4.4 shall be limited to 0.01.
2. **Light Partitions.** Nonstructural light partitions need not be evaluated for the Life Safety Nonstructural Performance Level.

13.6.2.3.2 Position Retention Nonstructural Performance Level

1. **Heavy Partitions.** Nonstructural heavy partitions shall conform to the requirements of Section 13.5.8 of ASCE 7 and shall be capable of resisting out-of-plane forces computed in accordance with Section 13.4.3 using a component importance factor, I_p, of 1.0. The drift ratio computed in accordance with Section 13.4.4 shall be limited to 0.01.
2. **Light Partitions.** Nonstructural light partitions shall conform to the requirements of Section 13.5.8 of ASCE 7 and shall be capable of resisting the out-of-plane forces computed in accordance with Section 13.4.3 using a component importance factor, I_p, of 1.0. The drift ratio computed in accordance with Section 13.4.4 shall be limited to 0.02.

13.6.2.3.3 Operational Nonstructural Performance Level

1. **Heavy Partitions.** Nonstructural heavy partitions shall conform to the requirements of Section 13.5.8 of ASCE 7 and shall be capable of resisting out-of-plane forces computed in accordance with Section 13.4.3 using a component importance factor, I_p, of 1.5. The drift ratio computed in accordance with Section 13.4.4 shall be limited to 0.005.
2. **Light Partitions.** Nonstructural light partitions shall conform to the requirements of Section 13.5.8 of ASCE 7 and shall be capable of resisting the out-of-plane forces computed in accordance with Section 13.4.3 using a component importance factor, I_p, of 1.5. The drift ratio computed in accordance with Section 13.4.4 shall be limited to 0.01.

13.6.2.4 Evaluation Requirements Partitions shall be evaluated to ascertain the type of material.

C13.6.2.4 Evaluation Requirements For concrete block partitions, presence of reinforcing and connection conditions at edges is important. For light partitions, bracing or anchoring of the top of the partitions is important.

13.6.3 Interior Veneers

13.6.3.1 Definition and Scope Interior veneers shall include decorative-finish materials applied to interior walls and partitions. These provisions of this section shall apply to veneers mounted 4 ft or more above the floor.

13.6.3.2 Component Behavior and Retrofit Methods Interior veneers shall be considered acceleration sensitive and deformation sensitive.

Interior veneers not conforming to the acceptance criteria of Section 13.6.3.3 shall be retrofitted in accordance with Section 13.5.

C13.6.3.2 Component Behavior and Retrofit Methods Interior veneers typically experience in-plane cracking and detachment but may also be displaced or detached out of plane by direct acceleration. Interior partitions loaded out of plane and supported on flexible backup support systems can experience cracking and detachment.

Drift analysis is necessary to establish conformance with drift acceptance criteria related to the Nonstructural Performance Level. Nonconformance requires limiting structural drift or special detailing to isolate the veneer support system from the structure to permit drift; this isolation generally requires disassembly of the support system and veneer replacement. Inadequately adhered veneer must be replaced.

13.6.3.3 Acceptance Criteria Acceptance criteria shall be applied in accordance with Section 13.3.

13.6.3.3.1 Life Safety Nonstructural Performance Level Backing shall be adequately attached to resist seismic forces computed in accordance with Section 13.4.3 using a component importance factor, I_p, of 1.0. The drift ratio computed in accordance with Section 13.4.4 shall be limited to 0.02.

13.6.3.3.2 Position Retention Nonstructural Performance Level Backing shall be adequately attached to resist seismic forces computed in accordance with Section 13.4.3 using a component importance factor, I_p, of 1.0. The drift ratio computed in accordance with Section 13.4.4 shall be limited to 0.02.

13.6.3.3.3 Operational Nonstructural Performance Level Backing shall be adequately attached to resist seismic forces computed in accordance with Section 13.4.3 using a component importance factor, I_p, of 1.5. The drift ratio computed in accordance with Section 13.4.4 shall be limited to 0.01.

13.6.3.4 Evaluation Requirements Backup walls or other supports and the attachments to that support shall be evaluated, as well as the condition of the veneer itself.

13.6.4 Ceilings

13.6.4.1 Definition and Scope Ceilings shall be categorized as one of the following types:

1. **Category a.** Surface-applied or furred with materials that are applied directly to wood joists, concrete slabs, or steel decking with mechanical fasteners or adhesives;
2. **Category b.** Short-dropped gypsum board sections (less than 2 ft drop) attached to wood or metal furring supported by carrier members;
3. **Category c.** Dropped gypsum board sections greater than 2 ft and suspended metal lath and plaster; and
4. **Category d.** Suspended acoustical board inserted within T-bars, together with lighting fixtures and mechanical items, to form an integrated ceiling system.

C13.6.4.1 Definition and Scope Furring materials include wood or metal furring acoustical tile, gypsum board, plaster, or metal panel ceiling materials.

Some older buildings have heavy decorative ceilings of molded plaster, which may be directly attached to the structure or suspended; these are typically Category a or Category c ceilings.

13.6.4.2 Component Behavior and Retrofit Methods Ceiling systems shall be considered both acceleration and deformation sensitive.

Ceilings not conforming to the acceptance criteria of Section 13.6.4.3 shall be retrofitted in accordance with Section 13.5.

Where retrofit is required for ceilings in Category a or b, they shall be strengthened to resist seismic forces computed in accordance with Section 13.4.3. Where retrofit is required for ceilings in Category d, they shall be retrofitted by the prescriptive procedures of Section 13.5.6.2 of ASCE 7.

C13.6.4.2 Component Behavior and Retrofit Methods Surface-applied or furred ceilings are primarily influenced by the performance of their supports. Retrofit of the ceiling takes the form of ensuring good attachment and adhesion. Metal lath and plaster ceilings depend on their attachment and bracing for large ceiling areas. Analysis is necessary to establish the acceleration forces and deformations that must be accommodated. Suspended integrated ceilings are highly susceptible to damage if not braced, causing distortion of grid and loss of panels; however, this is not regarded as a Life Safety threat with lightweight panels (less than 2 lb/ft^2).

Retrofit takes the form of bracing, attachment, and edge details designed to prescriptive design standards such as CISCA (1991) for seismic levels 0 to 2 and CISCA (1990) for seismic levels 3 and 4.

13.6.4.3 Acceptance Criteria Acceptance criteria shall be applied in accordance with Section 13.3.

13.6.4.3.1 Life Safety Nonstructural Performance Level Ceilings in Category a, b, or d need not be evaluated for the Life Safety Performance Level except as noted in the footnotes to Table 13-1. Ceilings in Category c shall be capable of accommodating the relative displacement computed in accordance with Section 13.4.4.

13.6.4.3.2 Position Retention Nonstructural Performance Level Ceilings in Category a or b shall be capable of resisting seismic forces computed in accordance with Section 13.4.3 using a component importance factor, I_p, of 1.0. Ceilings in Category c shall be capable of accommodating the relative displacement computed in accordance with Section 13.4.4. Ceilings in Category d shall be retrofitted by the prescriptive procedures of Section 13.5.6.2 of ASCE 7.

13.6.4.3.3 Operational Nonstructural Performance Level Ceilings in Category a or b shall be capable of resisting seismic forces computed in accordance with Section 13.4.3 using a component importance factor, I_p, of 1.5. Ceilings in Category c shall be capable of accommodating the relative displacement computed in accordance with Section 13.4.4. Ceilings in Category d shall be retrofitted by the prescriptive procedures of Section 13.5.6.2 of ASCE 7.

13.6.4.4 Evaluation Requirements The condition of the ceiling finish material, its attachment to the ceiling support system, the attachment and bracing of the ceiling support system to the structure, and the potential seismic impacts of other nonstructural systems on the ceiling system shall be evaluated.

13.6.5 Parapets and Cornices

13.6.5.1 Definition and Scope Parapets and cornices shall include exterior nonstructural features that project above or away from the building. The following parapets and appendages shall be evaluated and retrofitted in accordance with this section.

1. Unreinforced masonry parapets with an aspect ratio greater than 1.5;
2. Reinforced masonry or reinforced concrete parapets with an aspect ratio greater than 3.0;
3. Cornices or ledges constructed of stone, terra cotta, or brick, unless supported by a steel or reinforced concrete structure; and
4. Sculptures and ornamental features constructed of stone, terracotta, masonry, or concrete with an aspect ratio greater than 1.5.

The aspect ratio of parapets and appendages shall be defined as the height of the component above the level of anchorage (h) divided by the width of the component (d), as shown in Fig. 13-1. For horizontal projecting appendages, the aspect ratio shall be defined as the ratio of the horizontal projection beyond the vertical support of the building to the perpendicular dimension.

C13.6.5.1 Definition and Scope Other appendages, such as flagpoles and signs that are similar to the above in size, weight, or potential consequence of failure, may be retrofitted in accordance with this section.

13.6.5.2 Component Behavior and Retrofit Methods Parapets and appendages shall be considered acceleration sensitive in the out-of-plane direction.

Parapets and appendages not conforming to the requirements of Section 13.6.5.3 shall be retrofitted in accordance with Section 13.5.

C13.6.5.2 Component Behavior and Retrofit Methods Materials or components that are not properly braced may become disengaged and topple; the results are among the most seismically serious consequences of any nonstructural components.

Prescriptive design strategies for masonry parapets not exceeding 4 ft high consist of bracing in accordance with the concepts shown in FEMA 172 (1992a) and FEMA E-74 (2011), with detailing to conform to accepted engineering practice.

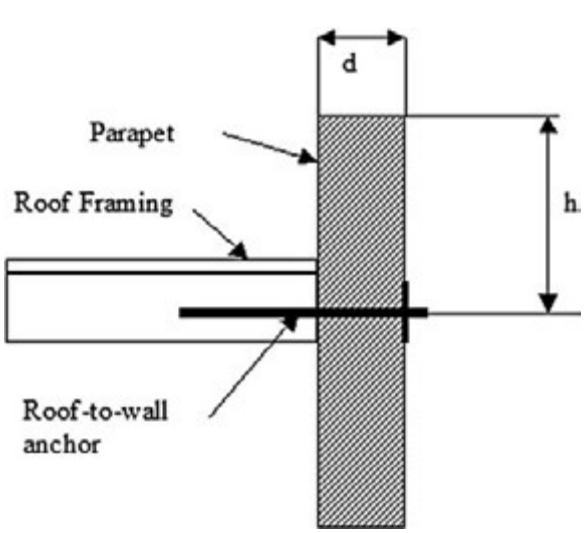

FIG. 13-1. Parapet Aspect Ratio

Braces for parapets should be spaced at a maximum of 8 ft on center and, where the parapet construction is discontinuous, a continuous backing component should be provided. Where there is no adequate connection, roof construction should be tied to parapet walls at the roof level. Other parapets and appendages should be analyzed for acceleration forces and should be braced and connected according to accepted engineering principles.

13.6.5.3 Acceptance Criteria Acceptance criteria shall be applied in accordance with Section 13.3.

13.6.5.3.1 Life Safety Nonstructural Performance Level Parapets and appendages exceeding the aspect ratios from Section 13.6.5.1 shall be capable of resisting seismic forces computed in accordance with Section 13.4.3 using a component importance factor, I_p, of 1.0.

13.6.5.3.2 Position Retention Nonstructural Performance Level Parapets and appendages shall be capable of resisting seismic forces computed in accordance with Section 13.4.3 using a component importance factor, I_p, of 1.0.

13.6.5.3.3 Operational Nonstructural Performance Level Parapets and appendages shall be capable of resisting seismic forces computed in accordance with Section 13.4.3 using a component importance factor, I_p, of 1.5.

13.6.5.4 Evaluation Requirements The condition of mortar and masonry, connection to supports, type and stability of the supporting structure, and horizontal continuity of the parapet coping, shall be considered in the evaluation.

13.6.6 Architectural Appendages and Marquees

13.6.6.1 Definition and Scope Architectural appendages shall include projections from an exterior wall that are extensions of the horizontal building structure or independent structures that are tied to the building. They shall also include sculptures and other ornamental features. Marquees shall include freestanding structures.

Canvas or other fabric projections need not be retrofitted in accordance with this section.

C13.6.6.1 Definition and Scope Canopies and marquees are generally used to provide weather protection.

Marquees are often constructed of metal or glass.

13.6.6.2 Component Behavior and Retrofit Methods Canopies and marquees shall be considered acceleration sensitive.

Canopies and marquees not conforming to the acceptance criteria of Section 13.6.6.3 shall be retrofitted in accordance with Section 13.5.

C13.6.6.2 Component Behavior and Retrofit Methods The variety of design of canopies and marquees is so great that they must be independently analyzed and evaluated for their ability to withstand seismic forces. Retrofit may take the form of improving attachment to the building structure, strengthening, bracing, or a combination of measures.

13.6.6.3 Acceptance Criteria Acceptance criteria shall be applied in accordance with Section 13.3.

13.6.6.3.1 Life Safety Nonstructural Performance Level Canopies, marquees, and other appendages shall be capable of resisting both horizontal and vertical seismic forces computed in accordance with Section 13.4.3 using a component importance factor, I_p, of 1.0.

13.6.6.3.2 Position Retention Nonstructural Performance Level Canopies, marquees, and other appendages shall be capable of

resisting both horizontal and vertical seismic forces computed in accordance with Section 13.4.3 using a component importance factor, I_p, of 1.0.

13.6.6.3.3 Operational Nonstructural Performance Level Canopies, marquees, and other appendages shall be capable of resisting both horizontal and vertical seismic forces computed in accordance with Section 13.4.3 using a component importance factor, I_p, of 1.5.

13.6.6.4 Evaluation Requirements Buckling in bracing, connection to supports, and type and stability of the supporting structure shall be considered in the evaluation.

13.6.7 Chimneys and Stacks

13.6.7.1 Definition and Scope Chimneys and stacks that are cantilevered above building roofs shall be evaluated in accordance with this section. Light metal residential chimneys need not comply with the provisions of this document.

13.6.7.2 Component Behavior and Retrofit Methods Chimneys and stacks shall be considered acceleration sensitive.

Chimneys and stacks not conforming to the acceptance criteria of Section 13.6.7.3 shall be retrofitted in accordance with Section 13.5.

C13.6.7.2 Component Behavior and Retrofit Methods Chimneys and stacks may fail through flexure, shear, or overturning. They may also disengage from adjoining floor or roof structures and damage them, and their collapse or overturning may also damage adjoining structures. Retrofit may take the form of strengthening and/or bracing and material repair. Residential chimneys may be braced in accordance with the concepts shown in FEMA E-74 (2011).

13.6.7.3 Acceptance Criteria Acceptance criteria shall be applied in accordance with Section 13.3.

13.6.7.3.1 Life Safety Nonstructural Performance Level Chimneys and stacks shall be capable of resisting seismic forces computed in accordance with Section 13.4.3 using a component importance factor, I_p, of 1.0. Residential chimneys shall be permitted to meet the prescriptive requirements of Section 13.4.2.

13.6.7.3.2 Position Retention Nonstructural Performance Level Chimneys and stacks shall be capable of resisting seismic forces computed in accordance with Section 13.4.3 using a component importance factor, I_p, of 1.0. Residential chimneys shall be permitted to meet the prescriptive requirements of Section 13.4.2.

13.6.7.3.3 Operational Nonstructural Performance Level Chimneys and stacks shall be capable of resisting seismic forces computed in accordance with Section 13.4.3 using a component importance factor, I_p, of 1.5. Residential chimneys shall be permitted to meet the prescriptive requirements of Section 13.4.2.

13.6.7.4 Evaluation Requirements The condition of the mortar and masonry, connection to adjacent structure, and type and stability of foundations shall be considered in the evaluation.

Concrete shall be evaluated for spalling and exposed reinforcement. Steel shall be evaluated for corrosion.

13.6.8 Stairs and Stair Enclosures

13.6.8.1 Definition and Scope Stairs shall include the treads, risers, and landings that make up passageways between floors, as well as the surrounding shafts, doors, windows, and fire-resistant assemblies that constitute the stair enclosure.

13.6.8.2 Component Behavior and Retrofit Methods Each of the separate components of the stairs shall be defined as either acceleration or deformation sensitive depending on the predominant behavior. Components of stairs that are attached to adjacent floors or floor framing shall be considered deformation sensitive. All other stair components shall be considered acceleration sensitive.

Stairs not conforming to the acceptance criteria of Section 13.6.8.3 shall be retrofitted in accordance with Section 13.5.

C13.6.8.2 Component Behavior and Retrofit Methods The stairs themselves may be independent of the structure or integral with the structure. If integral, they should form part of the overall structural evaluation and analysis, with particular attention paid to the possibility of response modification caused by localized stiffness. If independent, the stairs must be evaluated for normal stair loads and their ability to withstand direct acceleration or loads transmitted from the structure through connections.

Stair enclosure materials may fall and render the stairs unusable because of debris.

Retrofit of integral or independent stairs may take the form of necessary structural strengthening or bracing or the introduction of connection details to eliminate or reduce interaction between stairs and the building structure.

Retrofit of enclosing walls or glazing should follow the requirements of the relevant sections of this document.

13.6.8.3 Acceptance Criteria Acceptance criteria shall be applied in accordance with Section 13.3.

13.6.8.3.1 Life Safety Nonstructural Performance Level Stairs shall be capable of resisting the seismic forces computed in accordance with Section 13.4.3 using a component importance factor, I_p, of 1.0 and shall be capable of accommodating the expected relative displacement computed in accordance with Section 13.4.4.

13.6.8.3.2 Position Retention Nonstructural Performance Level Stairs shall be capable of resisting the seismic forces computed in accordance with Section 13.4.3 using a component importance factor, I_p, of 1.0 and shall be capable of accommodating the expected relative displacement computed in accordance with Section 13.4.4.

13.6.8.3.3 Operational Nonstructural Performance Level Stairs shall be capable of resisting the seismic forces computed in accordance with Section 13.4.3 using a component importance factor, I_p, of 1.5 and shall be capable of accommodating the expected relative displacement computed in accordance with Section 13.4.4.

13.6.8.4 Evaluation Requirements The materials and condition of stair members and their connections to supports and the types and stability of supporting and adjacent walls, windows, and other portions of the stair shaft system shall be considered in the evaluation.

13.6.9 Doors Required for Emergency Services Egress in Essential Facilities

13.6.9.1 Definition and Scope Doors shall include the apparatuses of the garage door systems, their connections to fire stations, and other door systems and connections that are critical for egress of emergency services from buildings immediately after earthquakes.

C13.6.9.1 Definition and Scope Door systems in essential facilities, such as fire stations or other structures necessary

for emergency operations, can become jammed or otherwise inoperable because of building movements and racking of door openings and can subsequently delay emergency response after an earthquake. Recent reports (Bello et al. 2006) have documented the vulnerability of fire station garage doors in past earthquakes and have made recommendations for how this risk should be addressed.

13.6.9.2 Component Behavior and Retrofit Methods Each of the separate components of the door systems shall be defined as either acceleration or deformation sensitive depending on the predominant behavior. Door jambs, vertical and horizontal tracks, rollers, and their connections shall be considered deformation sensitive.

13.6.9.3 Acceptance Criteria Acceptance criteria shall be applied in accordance with Section 13.3.

13.6.9.3.1 Life Safety and Position Retention Nonstructural Performance Levels Door systems shall be capable of resisting the seismic forces computed in accordance with Section 13.4.3. Doors and connections shall be capable of accommodating a drift ratio of 0.01 computed in accordance with Section 13.4.4. A deformation compatibility analysis shall demonstrate that door systems can accommodate the drifts such that the door can be manually opened or closed without binding.

13.6.9.3.2 Operational Nonstructural Performance Level Door systems shall be capable of resisting the seismic forces computed in accordance with Section 13.4.3. Doors and connections shall be capable of accommodating a drift ratio of 0.005 computed in accordance with Section 13.4.4. A deformation compatibility analysis shall demonstrate that door systems can accommodate the drifts such that the door can be manually opened or closed without binding.

13.6.9.4 Evaluation Requirements The components of door systems, their connections to supports, and gaps and tolerances between the components shall be considered in the evaluation.

13.7 MECHANICAL, ELECTRICAL, AND PLUMBING COMPONENTS: DEFINITION, BEHAVIOR, AND ACCEPTANCE CRITERIA

13.7.1 Mechanical Equipment

13.7.1.1 Definition and Scope Equipment used for the operation of the building that meets one or more of the following criteria shall be evaluated in accordance with this section for Life Safety or Position Retention Performance Level.

1. All equipment weighing more than 400 lb;
2. Unanchored equipment weighing more than 100 lb that does not have a factor of safety against overturning of 1.5 or greater where seismic forces, calculated in accordance with Section 13.4.3, are applied;
3. Equipment weighing more than 20 lb that is attached to ceiling, wall, or other support more than 4 ft above the floor; and
4. Building operation equipment, including the following:
   - 4.1. Boilers and furnaces;
   - 4.2. Conveyors (nonpersonnel);
   - 4.3. HVAC system equipment, vibration isolated;
   - 4.4. HVAC system equipment, non-vibration isolated; and
   - 4.5. HVAC system equipment mounted in-line with ductwork.

For the Operational Performance Level, all equipment in regions of high and moderate seismicity shall be evaluated in accordance with this section.

C13.7.1.1 Definition and Scope Equipment such as manufacturing or processing equipment related to the occupant's business should be evaluated separately for the effects that failure caused by a seismic event could have on the operation of the building.

13.7.1.2 Component Behavior and Retrofit Methods Mechanical equipment shall be considered acceleration sensitive.

Mechanical equipment not conforming to the acceptance criteria of Section 13.7.1.3 shall be retrofitted in accordance with Section 13.5.

C13.7.1.2 Component Behavior and Retrofit Methods The provisions of Section 13.7 focus on Position Retention, which is a primary consideration for the Life Safety Performance Level.

At the Operational Performance Level, position retention alone may be insufficient to ensure conformance with the stated goals of that Performance Level. The expectation is that whereas some nonstructural damage is expected, the building is expected to function after the earthquake, provided that utilities are available. To achieve this level of functionality, the designer must consider the essential postearthquake functions of the building and then identify those mechanical, electrical, and plumbing components that must operate for the building to function. Components may be identified as critical (components that must be functional) and noncritical (those components where function after an earthquake is desirable but not essential to the continued occupancy of the building). For critical components where operability is vital, the commentary of Section 13.2.2 of ASCE 7 provide guidance for seismically qualifying the component.

Position retention failure of components consists of sliding, tilting, or overturning of floor- or roof-mounted equipment off its base, possible loss of attachment (with consequent falling) for equipment attached to a vertical structure or suspended, and failure of piping or electrical wiring connected to the equipment.

Construction of mechanical equipment to nationally recognized codes and standards, such as those approved by the American National Standards Institute, provides adequate strength to accommodate all normal and upset operating loads.

For position retention, basic retrofit consists of securely anchoring floor-mounted equipment by bolting, with detailing appropriate to the base construction of the equipment. ASHRAE RP–812 provides more information on designing and detailing seismic anchorage.

Function and operability of mechanical and electrical components is affected only indirectly by increasing design forces. However, on the basis of past earthquake experience, it may be reasonable to conclude that if structural integrity and stability are maintained, function and operability after an earthquake will be provided for many types of equipment components. For complex components, testing or experience may be the only reasonable way to improve the assurance of function and operability. Testing is a well established alternative method of seismic qualification for small to medium-size equipment. Several national standards have testing requirements adaptable for seismic qualification.

Existing attachments for attached or suspended equipment must be evaluated for seismic load capacity and must be strengthened or braced as necessary. Attachments that provide secure anchoring eliminate or reduce the likelihood of piping or electrical distribution failure.

13.7.1.3 Acceptance Criteria Acceptance criteria shall be applied in accordance with Section 13.3.

13.7.1.3.1 Life Safety Nonstructural Performance Level Anchorage for mechanical equipment as required per Table 13-1 shall be capable of resisting seismic forces computed in accordance with Section 13.4.3 using a component importance factor, I_p, of 1.0.

Equipment that forms part of the life safety system, such as fire suppression equipment, or contains hazardous materials shall meet the requirements for Operational Performance Level in Section 13.7.1.3.3.

13.7.1.3.2 Position Retention Nonstructural Performance Level Equipment shall satisfy the requirements of Sections 13.2 and 13.6 of ASCE 7 based on the requirements for a component importance factor, I_p, of 1.0.

Equipment anchorage shall be capable of resisting seismic forces computed in accordance with Section 13.4.3 using a component importance factor, I_p, of 1.0.

Equipment that forms part of the life safety system, such as fire suppression equipment, or that contains hazardous materials shall meet the requirements for Operational Performance Level in Section 13.7.1.3.3.

13.7.1.3.3 Operational Nonstructural Performance Level Equipment shall satisfy the requirements of Sections 13.2 and 13.6, including special certification requirements of Section 13.2.2, of ASCE 7, based on the requirements for a component importance factor, I_p, of 1.5.

Equipment anchorage shall be capable of resisting seismic forces computed in accordance with Section 13.4.3 using a component importance factor, I_p, of 1.5.

13.7.1.4 Evaluation Requirements Equipment shall be analyzed to establish acceleration-induced forces, and supports, hold-downs, and bracing shall be visually evaluated.

For the Operational Nonstructural Performance Level, equipment shall be analyzed or tested to demonstrate its ability to remain functional after an earthquake commensurate with the Seismic Hazard Level being considered.

C13.7.1.4 Evaluation Requirements Existing concrete anchors may have to be tested by applying torque to the nuts to confirm that adequate strength is present.

13.7.2 Storage Vessels and Water Heaters

13.7.2.1 Definition and Scope Storage vessels and water heaters shall include all vessels that contain fluids used for building operation.

Vessels shall be classified into one of the following two categories:

1. **Category 1.** Vessels with structural support of contents, in which the shell is supported by legs or a skirt.
2. **Category 2.** Flat-bottom vessels in which the weight of the contents is supported by the floor, roof, or a structural platform.

C13.7.2.1 Definition and Scope The vessel may be fabricated of materials such as steel, other metals, or fiberglass, or it may be a glass-lined tank. These requirements may also be applied, with judgment, to vessels that contain solids that act as a fluid, and vessels containing fluids not involved in the operation of the building.

13.7.2.2 Component Behavior and Retrofit Methods Tanks and vessels shall be considered acceleration sensitive.

Tanks and vessels not conforming to the acceptance criteria of Section 13.7.2.3 shall be retrofitted in accordance with Section 13.5.

C13.7.2.2 Component Behavior and Retrofit Methods Category 1 vessels fail by stretching of anchor bolts, buckling and disconnection of supports, and consequent tilting or overturning of the vessel. A Category 2 vessel may be displaced from its foundation, or its shell may fail by yielding near the bottom, creating a visible bulge or possible leakage. Displacement of both types of vessel may cause rupturing of connecting piping and leakage.

Category 1 residential water heaters with a capacity no greater than 100 gallons may be retrofitted by prescriptive design methods, such as concepts described in FEMA 172 (1992a) or FEMA E-74 (2011). Category 1 vessels with a capacity less than 1,000 gallons should be designed to meet the force provisions of Section 13.4.3 and may be bracing strengthened or added as necessary. Other Category 1 and Category 2 vessels should be evaluated against a recognized standard, such as API 650, for vessels containing petroleum products or other chemicals, or AWWA D100-96 for water vessels. ASHRAE RP-812 provides more information on designing and detailing seismic anchorage and bracing.

13.7.2.3 Acceptance Criteria Acceptance criteria shall be applied in accordance with Section 13.3.

13.7.2.3.1 Life Safety Nonstructural Performance Level

1. **Category 1 Equipment.** If the analytical procedure is selected based on Table 13-1, Category 1 equipment and supports shall be capable of resisting seismic forces computed in accordance with Section 13.4.3 using a component importance factor, I_p, of 1.0. If the prescriptive procedure is selected based on Table 13-1, Category 1 equipment shall meet prescriptive requirements in accordance with Section 13.4.2.
2. **Category 2 Equipment.** If the analytical procedure is selected based on Table 13-1, Category 2 equipment and supports shall be capable of resisting seismic forces computed in accordance with Section 13.4.3 using a component importance factor, I_p, of 1.0. If the prescriptive procedure is selected based on Table 13-1, Category 2 equipment shall meet prescriptive requirements in accordance with Section 13.4.2.

Vessels containing hazardous materials or water for fire suppression shall meet the requirements for the Operational Nonstructural Performance Level of Section 13.7.2.3.3.

13.7.2.3.2 Position Retention Nonstructural Performance Level

1. **Category 1 Equipment.** If the analytical procedure is selected based on Table 13-1, Category 1 equipment and supports shall be capable of resisting seismic forces computed in accordance with Section 13.4.3 using a component importance factor, I_p, of 1.0. If the prescriptive procedure is selected based on Table 13-1, Category 1 equipment shall meet prescriptive requirements in accordance with Section 13.4.2.
2. **Category 2 Equipment.** If the analytical procedure is selected based on Table 13-1, Category 2 equipment and supports shall be capable of resisting seismic forces computed in accordance with Section 13.4.3 using a component importance factor, I_p, of 1.0. If the prescriptive procedure is selected based on Table 13-1, Category 2 equipment shall meet prescriptive requirements in accordance with Section 13.4.2.

Vessels containing hazardous materials or water for fire suppression shall meet the requirements for the Operational Nonstructural Performance Level of Section 13.7.2.3.3.

13.7.2.3.3 Operational Nonstructural Performance Level

1. **Category 1 Equipment.** If the analytical procedure is selected based on Table 13-1, Category 1 equipment and supports shall be capable of resisting seismic forces computed in accordance with Section 13.4.3 using a component importance factor, I_p, of 1.5. If the prescriptive procedure is selected based on Table 13-1, Category 1 equipment shall meet prescriptive requirements in accordance with Section 13.4.2. It must be demonstrated that the vessel will not lose contents in an earthquake commensurate with the Seismic Hazard Level being used for the evaluation or retrofit.
2. **Category 2 Equipment.** If the analytical procedure is selected based on Table 13-1, Category 2 equipment and supports shall be capable of resisting seismic forces computed in accordance with Section 13.4.3 using a component importance factor, I_p, of 1.5. If the prescriptive procedure is selected based on Table 13-1, Category 2 equipment shall meet prescriptive requirements in accordance with Section 13.4.2. It must be demonstrated that the vessel will not lose contents in an earthquake commensurate with the Seismic Hazard Level being used for the evaluation or retrofit.

13.7.2.4 Evaluation Requirements All equipment shall be visually evaluated to determine the existence of hold-downs, supports, and bracing.

C13.7.2.4 Evaluation Requirements Existing concrete anchors may have to be tested by applying torque to the nuts to confirm that adequate strength is present.

13.7.3 Pressure Piping

13.7.3.1 Definition and Scope The requirements of this section shall apply to all piping (except fire suppression piping) that carries fluids which, in their vapor stage, exhibit a pressure of 15 lb/ft^2, gauge, or higher.

13.7.3.2 Component Behavior and Retrofit Methods Piping shall be considered acceleration sensitive. Piping that runs between floors or across seismic joints shall be considered both acceleration and deformation sensitive.

Piping not conforming to the acceptance criteria of Section 13.7.3.3 shall be retrofitted in accordance with Section 13.5.

C13.7.3.2 Component Behavior and Retrofit Methods Appendix Chapter 6 of the 2003 NEHRP Provisions (FEMA 450, 2004) provides preliminary criteria for the establishment of such performance criteria and their use in the assessment and design of piping systems. The performance criteria, from least restrictive to most severe, are position retention, leak tightness, and operability. In particular, the interaction of systems and interface with the relevant piping design standards is addressed. For the Life Safety Performance Level, the focus is on position retention, which is defined as the condition of a piping system characterized by the absence of collapse or fall of any part of the system.

For the Position Retention Nonstructural Performance Level, leak tightness, the condition of a piping system characterized by containment of contents or maintenance of a vacuum with no discernible leakage, is required. Operability, the condition of a piping system characterized by leak tightness and continued delivery and shutoff or throttle of pipe contents flow by means of unimpaired operation of equipment and components such as pumps, compressors, and valves, is desirable, but it requires a significantly higher level of effort to achieve.

The most common failure of piping is joint failure, caused by inadequate support or bracing.

Retrofit is accomplished by prescriptive design approaches to support and bracing. Piping systems should be evaluated for compliance with consensus standards, such as ASME B31, B31.1, B31.3, B31.4, B31.5, B31.8, B31.9, and B31.11 and ASHRAE RP-812 where applicable. For large critical piping systems, the building official or responsible engineer must establish forces and evaluate supports. ASHRAE RP-812 provides more information on designing and detailing seismic bracing.

13.7.3.3 Acceptance Criteria Acceptance criteria shall be applied in accordance with Section 13.3.

13.7.3.3.1 Life Safety Nonstructural Performance Level If the prescriptive procedure is selected based on Table 13-1, piping shall meet the prescriptive requirements of ASME B31. If the analytical procedure is selected based on Table 13-1, piping shall be capable of resisting seismic forces computed in accordance with Section 13.4.3 using a component importance factor, I_p, of 1.0. Piping that runs between floors or across seismic joints shall be capable of accommodating relative displacements computed in accordance with Section 13.4.4.

13.7.3.3.2 Position Retention Nonstructural Performance Level Piping systems shall meet the requirements of Section 13.6.8 of ASCE 7.

If the prescriptive procedure is selected based on Table 13-1, piping shall meet the prescriptive requirements of ASME B31. If the analytical procedure is selected based on Table 13-1, piping shall be capable of resisting seismic forces computed in accordance with Section 13.4.3 using a component importance factor, I_p, of 1.0. Piping that runs between floors or across seismic joints shall be capable of accommodating relative displacements computed in accordance with Section 13.4.4.

13.7.3.3.3 Operational Nonstructural Performance Level Piping systems shall meet the requirements of Section 13.6.8 of ASCE 7.

If the prescriptive procedure is selected based on Table 13-1, piping shall meet the prescriptive requirements of ASME B31. If the analytical procedure is selected based on Table 13-1, piping shall be capable of resisting seismic forces computed in accordance with Section 13.4.3 using a component importance factor, I_p, of 1.5. Piping that runs between floors or across seismic joints shall be capable of accommodating relative displacements computed in accordance with Section 13.4.4.

Piping should maintain leak-tightness in an earthquake commensurate with the Seismic Hazard Level being used for the evaluation or retrofit.

13.7.3.4 Evaluation Requirements High-pressure piping shall be tested by an approved method. Lines shall be hydrostatically tested to 150% of the maximum anticipated pressure of the system.

C13.7.3.4 Evaluation Requirements High-pressure piping may be tested in accordance with ASME B31.9.

13.7.4 Fire Suppression Piping

13.7.4.1 Definition and Scope Fire suppression piping shall include fire sprinkler piping consisting of main risers and laterals weighing, loaded, in the range of 30 to 100 lb/ft, with branches of decreasing size to 2 lb/ft.

13.7.4.2 Component Behavior and Retrofit Methods Fire suppression piping shall be considered acceleration sensitive. Fire suppression piping that runs between floors or across seismic

joints shall be considered both acceleration and deformation sensitive.

Fire suppression piping not conforming to the acceptance criteria of Section 13.6.4.3 shall be retrofitted in accordance with Section 13.5.

C13.7.4.2 Component Behavior and Retrofit Methods The most common failure of fire suppression piping is joint failure, caused by inadequate support or bracing or by sprinkler heads impacting adjoining materials.

Retrofit is accomplished by prescriptive design approaches to support and bracing. The prescriptive requirements of NFPA 13 should be used.

13.7.4.3 Acceptance Criteria Acceptance criteria shall be applied in accordance with Section 13.3.

13.7.4.3.1 Life Safety Nonstructural Performance Level If the prescriptive procedure is selected based on Table 13-1, fire suppression piping shall meet the prescriptive requirements of NFPA 13. If the analytical procedure is selected based on Table 13-1, fire suppression piping shall be capable of resisting seismic forces computed in accordance with Section 13.4.3 using a component importance factor, I_p, of 1.0. Fire suppression piping that runs between floors or across seismic joints shall be capable of accommodating relative displacements computed in accordance with Section 13.4.4.

13.7.4.3.2 Position Retention Nonstructural Performance Level Piping systems shall meet the requirements of Section 13.6.8 of ASCE 7.

If the prescriptive procedure is selected based on Table 13-1, fire suppression piping shall meet the prescriptive requirements of NFPA 13. If the analytical procedure is selected based on Table 13-1, fire suppression piping shall be capable of resisting seismic forces computed in accordance with Section 13.4.3 using a component importance factor, I_p, of 1.5. Fire suppression piping that runs between floors or across seismic joints shall be capable of accommodating relative displacements computed in accordance with Section 13.4.4.

13.7.4.3.3 Operational Nonstructural Performance Level Piping systems shall meet the requirements of Section 13.6.8 of ASCE 7.

If the prescriptive procedure is selected based on Table 13-1, fire suppression piping shall meet the prescriptive requirements of NFPA 13. If the analytical procedure is selected based on Table 13-1, fire suppression piping shall be capable of resisting seismic forces computed in accordance with Section 13.4.3 using a component importance factor, I_p, of 1.5. Fire suppression piping that runs between floors or across seismic joints shall be capable of accommodating relative displacements computed in accordance with Section 13.4.4.

13.7.4.4 Evaluation Requirements The support, flexibility, protection at seismic movement joints, and freedom from impact from adjoining materials at the sprinkler heads shall be evaluated.

C13.7.4.4 Evaluation Requirements The support and bracing of bends of the main risers and laterals, and maintenance of adequate flexibility to prevent buckling, are especially important.

13.7.5 Fluid Piping Other than Fire Suppression

13.7.5.1 Definition and Scope Piping, other than pressure piping or fire suppression lines, that transfers fluids under pressure by gravity, or that is open to the atmosphere—including drainage and ventilation piping; hot, cold, and chilled water piping; and piping carrying liquids, as well as fuel gas lines—shall meet the requirements of this section.

Fluid piping other than fire suppression piping shall be classified into one of the following two categories:

1. **Category 1.** Hazardous materials and flammable liquids that would pose an immediate Life Safety danger if exposed because of inherent properties of the contained material.
2. **Category 2.** Materials that, in case of line rupture, would cause property damage but pose no immediate Life Safety danger.

C13.7.5.1 Definition and Scope Hazardous materials and flammable liquids that would pose an immediate Life Safety danger if exposed are defined in NFPA 49, 325, 491, and 704.

13.7.5.2 Component Behavior and Retrofit Methods Fluid piping other than fire suppression piping shall be considered acceleration sensitive. Piping that runs between floors or across seismic joints shall be considered both acceleration and deformation sensitive.

Fluid piping not conforming to the acceptance criteria of Section 13.7.5.3 shall be retrofitted in accordance with Section 13.5.

C13.7.5.2 Component Behavior and Retrofit Methods The most common failure is joint failure, caused by inadequate support or bracing.

Category 1 piping retrofit is accomplished by strengthening support and bracing, using the prescriptive methods of MSS SP-58. The piping systems themselves should be designed to meet the force provisions of Section 13.4.3 and the relative displacement provisions of Section 13.4.4. The effects of temperature differences, dynamic fluid forces, and piping contents should be taken into account.

Category 2 piping retrofit is accomplished by strengthening support and bracing using the prescriptive methods of MSS SP-58 as long as the piping falls within the size limitations of those guidelines. Piping that exceeds the limitations of those guidelines shall be designed to meet the force provisions of Section 13.4.3 and the relative displacement provisions of Section 13.4.4.

More information on designing and detailing seismic bracing can be found in ASHRAE RP-812.

13.7.5.3 Acceptance Criteria Acceptance criteria shall be applied in accordance with Section 13.3.

13.7.5.3.1 Life Safety Nonstructural Performance Level

1. **Category 1 piping systems.** If the prescriptive procedure is selected based on Table 13-1, fluid piping supports and bracing shall meet the prescriptive requirements of Section 13.4.2. If the analytical procedure is selected based on Table 13-1, fluid piping shall be capable of resisting seismic forces computed in accordance with Section 13.4.3 using a component importance factor, I_p, of 1.5. Piping that runs between floors and across seismic joints shall be capable of accommodating relative displacements computed in accordance with Section 13.4.4. Piping systems shall meet the requirements of Section 13.6.8 of ASCE 7. Piping should maintain leak-tightness in an earthquake commensurate with the Seismic Hazard Level being used for the evaluation or retrofit.
2. **Category 2 piping systems.** If the prescriptive procedure is selected based on Table 13-1, fluid piping supports and bracing shall meet the prescriptive requirements of Section

13.4.2. If the analytical procedure is selected based on Table 13-1, fluid piping shall be capable of resisting seismic forces computed in accordance with Section 13.4.3 using a component importance factor, I_p, of 1.0. Piping that runs between floors and across seismic joints shall be capable of accommodating relative displacements computed in accordance with Section 13.4.4.

13.7.5.3.2 Position Retention Nonstructural Performance Level Piping systems shall meet the requirements of Section 13.6.8 of ASCE 7.

If the prescriptive procedure is selected based on Table 13-1, fluid piping supports and bracing shall meet the prescriptive requirements of Section 13.4.2 for essential facilities. If the analytical procedure is selected based on Table 13-1, fluid piping shall be capable of resisting seismic forces computed in accordance with Section 13.4.3 using a component importance factor, I_p, of 1.0. Piping that runs between floors and across seismic joints shall be capable of accommodating relative displacements computed in accordance with Section 13.4.4.

13.7.5.3.3 Operational Nonstructural Performance Level Piping systems shall meet the requirements of Section 13.6.8 of ASCE 7.

If the prescriptive procedure is selected based on Table 13-1, fluid piping supports and bracing shall meet the prescriptive requirements of Section 13.4.2 equivalent to Risk Category IV. If the analytical procedure is selected based on Table 13-1, fluid piping shall be capable of resisting seismic forces computed in accordance with Section 13.4.3 using a component importance factor, I_p, of 1.5. Piping that runs between floors and across seismic joints shall be capable of accommodating relative displacements computed in accordance with Section 13.4.4.

Piping should maintain leak-tightness in an earthquake commensurate with the Seismic Hazard Level being used for the evaluation or retrofit.

13.7.5.4 Evaluation Requirements The support, flexibility, and protection at seismic joints of fluid piping other than fire suppression piping shall be evaluated.

Piping shall be insulated from detrimental heat effects.

C13.7.5.4 Evaluation Requirements The support and bracing of bends in the main risers and laterals, and maintenance of adequate flexibility to prevent buckling, are especially important.

13.7.6 Ductwork

13.7.6.1 Definition and Scope Ductwork shall include HVAC and exhaust ductwork systems. Seismic restraints shall not be required for ductwork that is not conveying hazardous materials and that meets either of the following conditions:

1. HVAC ducts are suspended from hangers 12 in. or less from the top of the duct to the supporting structure. Hangers shall be installed without eccentricities that induce moments in the hangers.
2. HVAC ducts have a cross-sectional area of less than 6 ft^2.

13.7.6.2 Component Behavior and Retrofit Methods Ducts shall be considered acceleration sensitive. Ductwork that runs between floors or across seismic joints shall be considered both acceleration and deformation sensitive.

Ductwork not conforming to the acceptance criteria of Section 13.7.6.3 shall be retrofitted in accordance with Section 13.5.

C13.7.6.2 Component Behavior and Retrofit Methods Damage to ductwork is caused by failure of supports or lack of bracing that causes deformation or rupture of the ducts at joints, leading to leakage from the system.

Retrofit consists of strengthening supports and strengthening or adding bracing. Prescriptive design methods may be used in accordance with ANSI/SMACNA 001. More information on designing and detailing seismic bracing can be found in ASHRAE RP-812.

Retrofit may be accomplished by strengthening support and bracing using the prescriptive methods contained in SMACNA's *Rectangular Industrial Duct Construction Standards* and *HVAC Duct Construction Standards—Metal and Flexible* (2004 and 2005).

13.7.6.3 Acceptance Criteria Acceptance criteria shall be applied in accordance with Section 13.3.

13.7.6.3.1 Life Safety Nonstructural Performance Level Ductwork shall meet the requirements of prescriptive standards in accordance with ANSI/SMACNA 001.

13.7.6.3.2 Position Retention Nonstructural Performance Level Ductwork shall meet the requirements of prescriptive standards in accordance with ANSI/SMACNA 001 and the requirements of ASCE 7, Section 13.6.7 for a component importance factor, I_p, of 1.5.

13.7.6.3.3 Operational Nonstructural Performance Level Ductwork shall meet the requirements of prescriptive standards in accordance with ANSI/SMACNA 001 and the requirements of ASCE 7 Section 13.6.7 for a component importance factor, I_p, of 1.5.

13.7.6.4 Evaluation Requirements Ductwork shall be evaluated visually to determine its length, connection type, and cross-sectional area.

13.7.7 Electrical and Communications Equipment

13.7.7.1 Definition and Scope All electrical and communication equipment, including panel boards, battery racks, motor control centers, switch gear, and other fixed components located in electrical rooms or elsewhere in the building that meet any of the following criteria shall comply with the requirements of this section for Life Safety and Position Retention:

1. All equipment weighing more than 400 lb;
2. Unanchored equipment weighing more than 100 lb that does not have a factor of safety against overturning of 1.5 or greater where seismic forces computed in accordance with Section 13.4.3 are applied;
3. Equipment weighing more than 20 lb that is attached to ceiling, wall, or other support more than 4 ft above the floor; and
4. Building operation equipment.

For the Operational Performance Level, all equipment in regions of high and moderate seismicity shall be evaluated in accordance with this section.

13.7.7.2 Component Behavior and Retrofit Methods Electrical equipment shall be considered acceleration sensitive.

Electrical equipment not conforming to the acceptance criteria of Section 13.7.7.3 shall be retrofitted in accordance with Section 13.5.

C13.7.7.2 Component Behavior and Retrofit Methods Failure of these components consists of sliding, tilting, or overturning of floor- or roof-mounted equipment off its base; possible loss of attachment (with consequent falling) for equipment attached

to a vertical structure or suspended; and failure of electrical wiring connected to the equipment.

Construction of electrical equipment to nationally recognized codes and standards, such as those approved by the American National Standards Institute (ANSI), provides adequate strength to accommodate all normal and upset operating loads.

Basic retrofit consists of securely anchoring floor-mounted equipment by bolting, with detailing appropriate to the base construction of the equipment.

13.7.7.3 Acceptance Criteria Acceptance criteria shall be applied in accordance with Section 13.3.

13.7.7.3.1 Life Safety Nonstructural Performance Level If the prescriptive procedure is selected based on Table 13-1, electrical equipment shall meet the prescriptive requirements of Section 13.4.2. If the analytical procedure is selected based on Table 13-1, electrical equipment shall be capable of resisting seismic forces computed in accordance with Section 13.4.3 using a component importance factor, I_p, of 1.0.

Equipment that forms part of the emergency power system shall meet the requirements for Operational Performance Level in Section 13.7.7.3.3.

13.7.7.3.2 Position Retention Nonstructural Performance Level Equipment shall satisfy the requirements of Sections 13.2 and 13.6 of ASCE 7 based on the requirements for a component importance factor, I_p, of 1.0.

If the prescriptive procedure is selected based on Table 13-1, electrical equipment shall meet the prescriptive requirements of Section 13.4.2. If the analytical procedure is selected based on Table 13-1, electrical equipment shall be capable of resisting seismic forces computed in accordance with Section 13.4.3 using a component importance factor, I_p, of 1.0.

Equipment that forms part of the emergency power system shall meet the requirements for Operational Performance Level in Section 13.7.7.3.3.

13.7.7.3.3 Operational Nonstructural Performance Level Equipment shall satisfy the requirements of Sections 13.2 and 13.6, including special certification requirements of Section 13.2.2, of ASCE 7 based on the requirements for a component importance factor, I_p, of 1.5.

If the prescriptive procedure is selected based on Table 13-1, electrical equipment shall meet the prescriptive requirements of Section 13.4.2. If the analytical procedure is selected based on Table 13-1, electrical equipment shall be capable of resisting seismic forces computed in accordance with Section 13.4.3 using a component importance factor, I_p, of 1.5.

Equipment that forms part of the emergency power system shall meet the requirements for Operational Performance Level in Section 13.7.7.3.3.

13.7.7.4 Evaluation Requirements Equipment shall be visually evaluated to determine its category and the existence of the hold-downs, supports, and braces.

For the Operational Performance Level, equipment shall be analyzed or tested to demonstrate its ability to remain functional after an earthquake commensurate with the Seismic Hazard Level being considered.

C13.7.7.4 Evaluation Requirements Larger equipment requiring the analytical procedure must be analyzed to determine forces and must be visually evaluated. Concrete anchors may have to be tested by applying torque to the nuts to confirm that adequate strength is present.

13.7.8 Electrical and Communications Distribution Components

13.7.8.1 Definition and Scope All electrical and communications transmission lines, conduit, and cables, and their supports, shall comply with the requirements of this section.

13.7.8.2 Component Behavior and Retrofit Methods Electrical distribution equipment shall be considered acceleration sensitive. Wiring or conduit that runs between floors or across expansion or seismic joints shall be considered both acceleration and deformation sensitive.

Electrical and communications distribution components not conforming to the acceptance criteria of Section 13.7.8.3 shall be retrofitted in accordance with Section 13.5.

C13.7.8.2 Component Behavior and Retrofit Methods Failure occurs most commonly by inadequate support or bracing, deformation of the attached structure, or impact from adjoining materials.

13.7.8.3 Acceptance Criteria Acceptance criteria shall be applied in accordance with Section 13.3.

13.7.8.3.1 Life Safety Nonstructural Performance Level Electrical and communications distribution components shall meet the requirements of prescriptive standards in accordance with Section 13.4.2.

13.7.8.3.2 Position Retention Nonstructural Performance Level Equipment shall satisfy the requirements of Sections 13.2 and 13.6 of ASCE 7 based on the requirements for a component importance factor, I_p, of 1.0.

Electrical and communications distribution components shall meet the requirements of prescriptive standards for essential facilities in accordance with Section 13.4.2 of this standard and Section 13.6.4 of ASCE 7. If the analytical procedure is selected based on Table 13-1, electrical and communications distribution components shall be capable of resisting seismic forces computed in accordance with Section 13.4.3 using a component importance factor, I_p, of 1.0. Electrical and communications distribution components that run between floors or across seismic joints shall be capable of accommodating relative displacements computed in accordance with Section 13.4.4.

13.7.8.3.3 Operational Nonstructural Performance Level Equipment shall satisfy the requirements of Sections 13.2 and 13.6, including special certification requirements of Section 13.2.2, of ASCE 7, based on the requirements for a component importance factor, I_p, of 1.5.

Electrical and communications distribution components shall meet the requirements of prescriptive standards for essential facilities in accordance with Section 13.4.2 of this standard and Section 13.6.4 of ASCE 7. If the analytical procedure is selected based on Table 13-1, electrical and communications distribution components shall be capable of resisting seismic forces computed in accordance with Section 13.4.3 using a component importance factor, I_p, of 1.5. Electrical and communications distribution components that run between floors or across seismic joints shall be capable of accommodating relative displacements computed in accordance with Section 13.4.4.

13.7.8.4 Evaluation Requirements Components shall be visually evaluated to determine the existence of supports and bracing.

For the Operational Performance Level, equipment shall be analyzed or tested to demonstrate its ability to remain functional after an earthquake commensurate with the Seismic Hazard Level being considered.

13.7.9 Light Fixtures

13.7.9.1 Definition and Scope Lighting fixtures shall be classified into one of the following categories:

Category 1. Lighting recessed in ceilings;
Category 2. Lighting surface mounted to ceilings or walls;
Category 3. Lighting supported within a suspended ceiling system (integrated ceiling);
Category 4. Lighting suspended from ceilings or structure by a pendant or chain.

13.7.9.2 Component Behavior and Retrofit Methods Light fixtures not conforming to the acceptance criteria of Section 13.7.9.3 shall be retrofitted in accordance with Section 13.5.

C13.7.9.2 Component Behavior and Retrofit Methods Failure of Category 1 and 2 components occurs through failure of attachment of the light fixture and/or failure of the supporting ceiling or wall. Failure of Category 3 components occurs through loss of support from the T-bar system and by distortion caused by deformation of the supporting structure or deformation of the ceiling grid system, allowing the fixture to fall. Failure of Category 4 components is caused by excessive swinging that results in the pendant or chain support breaking on impact with adjacent materials, or the support being pulled out of the ceiling.

Retrofit of Category 1 and 2 components involves attachment upgrade or fixture replacement in association with necessary retrofit of the supporting ceiling or wall. Retrofit of Category 3 components involves the addition of independent support for the fixture from the structure or substructure in accordance with FEMA E-74 (2011) design concepts. Retrofit of Category 4 components involves strengthening of attachment and ensuring freedom to swing without impacting adjoining materials.

13.7.9.3 Acceptance Criteria Acceptance criteria shall be applied in accordance with Section 13.3.

13.7.9.3.1 Life Safety Nonstructural Performance Level

1. **Categories 1 and 2.** The connection to ceiling or wall shall be present with no visible signs of distress.
2. **Category 3.** System bracing and support shall meet prescriptive requirements in accordance with Section 13.4.2.
3. **Category 4.** Fixtures weighing more than 20 lb shall be adequately articulated, or connections to the building shall be ductile, and the fixture shall be free to swing without impacting adjoining materials.

13.7.9.3.2 Position Retention Nonstructural Performance Level

1. **Categories 1 and 2.** The connection to ceiling or wall shall be present with no visible signs of distress.
2. **Category 3.** System bracing and support shall meet prescriptive requirements for standard occupancy facilities.
3. **Category 4.** Fixtures weighing more than 20 lb shall be articulated, or connections to the building shall be ductile, and the fixture shall be free to swing without impacting adjoining materials.

13.7.9.3.3 Operational Nonstructural Performance Level

1. **Categories 1 and 2.** The connection to ceiling or wall shall be present with no visible signs of distress.
2. **Category 3.** System bracing and support shall meet prescriptive requirements for essential facilities.
3. **Category 4.** Fixtures weighing more than 20 lb shall be articulated, or connections to the building shall be ductile, and the fixture shall be free to swing without impacting adjoining materials.

13.7.9.4 Evaluation Requirements Light fixture supports shall be visually evaluated to determine the connection type and adequacy.

13.8 FURNISHINGS AND INTERIOR EQUIPMENT: DEFINITION, BEHAVIOR, AND ACCEPTANCE CRITERIA

13.8.1 Storage Racks

13.8.1.1 Definition and Scope Storage racks shall include systems for holding materials either permanently or temporarily.

C13.8.1.1 Definition and Scope Storage racks are usually constructed of metal. Storage racks are generally purchased as proprietary systems installed by a tenant and are often not under the direct control of the building owner. Thus, they are usually not part of the construction contract and often have no foundation or foundation attachment. However, they are often permanently installed, and their size and loaded weight make them an important hazard to life, property, or the surrounding structure. Storage racks more than 4 ft high located in occupied locations shall be considered where the Life Safety Nonstructural Performance Level is selected.

13.8.1.2 Component Behavior and Retrofit Methods Storage racks shall be considered acceleration sensitive.

Storage racks not conforming to the acceptance criteria of Section 13.8.1.3 shall be retrofitted in accordance with Section 13.5.

C13.8.1.2 Component Behavior and Retrofit Methods Storage racks may fail internally—through inadequate bracing or moment-resisting capacity—or externally, by overturning caused by absence or failure of foundation attachments.

Retrofit is usually accomplished by the addition of bracing to the rear and side panels of racks and/or by improving the connection of the rack columns to the supporting slab. In rare instances, foundation improvements may be required to remedy insufficient bearing or uplift load capacity.

Seismic forces can be established by analysis in accordance with Section 13.4.3. However, special attention should be paid to the evaluation and analysis of large, heavily loaded rack systems because of their heavy loading and lightweight structural members.

13.8.1.3 Acceptance Criteria Acceptance criteria shall be applied in accordance with Section 13.3.

13.8.1.3.1 Life Safety Nonstructural Performance Level Storage racks shall be capable of resisting seismic forces computed in accordance with Section 13.4.3 using a component importance factor, I_p, of 1.0.

13.8.1.3.2 Position Retention Nonstructural Performance Level Storage racks shall be capable of resisting seismic forces computed in accordance with Section 13.4.3 using a component importance factor, I_p, of 1.0 and shall conform to the requirements of Section 15.5.3 in ASCE 7.

13.8.1.3.3 Operational Nonstructural Performance Level Storage racks shall be capable of resisting seismic forces computed in accordance with Section 13.4.3 using a component importance factor, I_p, of 1.5 and shall conform to the requirements of Section 15.5.3 in ASCE 7.

13.8.1.4 Evaluation Requirements Buckling or racking failure of storage rack components, connection to support structures,

and type and stability of supporting structure shall be considered in the evaluation.

13.8.2 Contents

13.8.2.1 Definition and Scope Contents, such as bookcases constructed of wood or metal, more than 4 ft high shall meet the requirements of this section.

13.8.2.2 Component Behavior and Retrofit Methods Contents shall be considered acceleration sensitive.

Contents not conforming to the acceptance criteria of Section 13.8.2.3 shall be retrofitted in accordance with Section 13.5.

C13.8.2.2 Component Behavior and Retrofit Methods Bookcases may deform or overturn because of inadequate bracing or attachment to floors or adjacent walls, columns, or other structural members. Retrofit is usually accomplished by adding metal cross bracing to the rear of the bookcase, to improve its internal resistance to racking forces, and by bracing the bookcase both in- and out-of-plane to the adjacent structure or walls to prevent overturning and racking.

13.8.2.3 Acceptance Criteria Acceptance criteria shall be applied in accordance with Section 13.3.

13.8.2.3.1 Life Safety Nonstructural Performance Level Contents shall be capable of resisting seismic forces computed in accordance with Section 13.4.3 using a component importance factor, I_p, of 1.0.

13.8.2.3.2 Position Retention Nonstructural Performance Level Contents shall be capable of resisting seismic forces computed in accordance with Section 13.4.3 using a component importance factor, I_p, of 1.0.

13.8.2.3.3 Operational Nonstructural Performance Level Contents shall be capable of resisting seismic forces computed in accordance with Section 13.4.3 using a component importance factor, I_p, of 1.5.

13.8.2.4 Evaluation Requirements The loading, type, and condition of bookcases; their connection to support structures; and type and stability of supporting structure shall be considered in the evaluation.

13.8.3 Computer Access Floors

13.8.3.1 Definition and Scope Computer access floors shall include panelized, elevated floor systems designed to facilitate access to wiring, fiber optics, and other services associated with computers and other electronic components.

C13.8.3.1 Definition and Scope Access floors vary in height but generally are less than 3 ft above the supporting structural floor. The systems include structural legs, horizontal panel supports, and panels.

13.8.3.2 Component Behavior and Retrofit Methods Computer access floors shall be considered both acceleration sensitive and deformation sensitive.

Computer access floors not conforming to the acceptance criteria of Section 13.8.3.3 shall be retrofitted in accordance with Section 13.5.

C13.8.3.2 Component Behavior and Retrofit Methods Computer access floors may displace laterally or buckle vertically under seismic loads. Retrofit of access floors usually includes a combination of improved attachment of computer and communication racks through the access floor panels to the supporting steel structure or to the underlying floor system, while improving the seismic-force-resisting capacity of the steel stanchion system by installing braces or improving the connection of the stanchion base to the supporting floor, or both.

Retrofit should be designed in accordance with concepts described in FEMA E-74 (2011). The weight of the floor system and supported equipment should be included in the analysis.

13.8.3.3 Acceptance Criteria Acceptance criteria shall be applied in accordance with Section 13.3.

13.8.3.3.1 Life Safety Nonstructural Performance Level Computer access floors need not be evaluated for the Life Safety Nonstructural Performance Level.

13.8.3.3.2 Position Retention Nonstructural Performance Level Computer access floors shall conform to the requirements of Section 13.5.7 of ASCE 7.

If the prescriptive procedure is selected based on Table 13-1, prescriptive requirements of Section 13.4.2 shall be met. If the analytical procedure is selected based on Table 13-1, computer access floors shall be capable of resisting seismic forces computed in accordance with Section 13.4.3 using a component importance factor, I_p, of 1.0.

13.8.3.3.3 Operational Nonstructural Performance Level Computer access floors shall conform to the requirements of Section 13.5.7 of ASCE 7 and shall be special access floors per the requirements of Section 13.5.7.2 of ASCE 7.

If the prescriptive procedure is selected based on Table 13-1, prescriptive requirements of Section 13.4.2 shall be met. If the analytical procedure is selected based on Table 13-1, computer access floors shall be capable of resisting seismic forces computed in accordance with Section 13.4.3 using a component importance factor, I_p, of 1.5.

13.8.3.4 Evaluation Requirements Buckling and racking of access floor supports, connection to the support structure, and the effects of mounted equipment shall be considered in the evaluation.

C13.8.3.4 Evaluation Requirements Possible future equipment should also be considered in the evaluation.

13.8.4 Hazardous Materials Storage

13.8.4.1 Definition and Scope Hazardous materials storage shall include permanently installed containers—freestanding, on supports, or stored on countertops or shelves—that hold materials defined to be hazardous by the National Institute for Occupational Safety and Health, including the following types:

1. Propane gas tanks;
2. Compressed gas vessels; and
3. Dry or liquid chemical storage containers.

Large nonbuilding structures, such as large tanks found in heavy industry or power plants, floating-roof oil storage tanks, and large (more than 10 ft long) propane tanks at propane manufacturing or distribution plants need not meet the requirements of this section.

13.8.4.2 Component Behavior and Retrofit Methods Hazardous materials storage shall be considered acceleration sensitive.

Hazardous materials storage not conforming to the acceptance criteria of Section 13.8.4.3 shall be retrofitted in accordance with Section 13.5.

C13.8.4.2 Component Behavior and Retrofit Methods Upset of the storage container may release the hazardous material. Failure occurs because of buckling and overturning of supports

and/or inadequate bracing. Retrofit consists of strengthening and increasing supports or adding bracing designed according to concepts described in FEMA 172 (1992a) and FEMA E-74 (2011).

13.8.4.3 Acceptance Criteria Acceptance criteria shall be applied in accordance with Section 13.3.

13.8.4.3.1 Life Safety and Position Retention Nonstructural Performance Level Hazardous materials storage shall meet the requirements for Operational Nonstructural Performance Level of Section 13.8.4.3.2.

13.8.4.3.2 Operational Nonstructural Performance Level Hazardous materials storage shall meet prescriptive requirements for essential facilities in accordance with Section 13.4.2. If the analytical procedure is selected based on Table 13-1, hazardous materials storage shall be capable of resisting seismic forces computed in accordance with Section 13.4.3 using a component importance factor, I_p, of 1.5.

13.8.4.4 Evaluation Requirements The location and types of hazardous materials, container materials, manner of bracing, internal seismic force resistance, and the effect of hazardous material spills shall be considered in the evaluation.

For the Operational Performance Level, hazardous material storage shall be analyzed or tested to demonstrate its ability to contain the hazardous material after an earthquake commensurate with the Seismic Hazard Level being considered.

13.8.5 Computer and Communication Racks

13.8.5.1 Definition and Scope Computer and communication racks shall include freestanding rack systems more than 4 ft high designed to support computer and other electronic equipment. Equipment stored on computer and communication racks need not meet the requirements of this section.

C13.8.5.1 Definition and Scope Racks may be supported on either structural or access floors and may or may not be attached directly to these supports.

13.8.5.2 Component Behavior and Retrofit Methods Computer and communication racks shall be considered acceleration sensitive.

Computer communication racks not conforming to the acceptance criteria of Section 13.8.5.3 shall be retrofitted in accordance with Section 13.5.

C13.8.5.2 Component Behavior and Retrofit Methods Computer and communication racks may fail internally—through inadequate bracing or moment-resisting capacity—or externally, by overturning caused by absence or failure of floor attachments.

Retrofit is usually accomplished by the addition of bracing to the rear and side panels of the racks and/or by improving the connection of the rack to the supporting floor using concepts shown in FEMA 172 (1992a) or FEMA E-74 (2011).

13.8.5.3 Acceptance Criteria Acceptance criteria shall be applied in accordance with Section 13.3.

13.8.5.3.1 Life Safety Nonstructural Performance Level Computer and communication racks need not be retrofitted for the Life Safety Nonstructural Performance Level.

13.8.5.3.2 Position Retention Nonstructural Performance Level If the prescriptive procedure is selected based on Table 13-1, computer and communication racks shall meet the prescriptive requirements of Section 13.4.2. If the analytical procedure is selected based on Table 13-1, computer and communication racks shall be capable of resisting seismic forces computed in accordance with Section 13.4.3 using a component importance factor, I_p, of 1.0.

13.8.5.3.3 Position Retention Nonstructural Performance Level If the prescriptive procedure is selected based on Table 13-1, computer and communication racks shall meet the prescriptive requirements of Section 13.4.2. If the analytical procedure is selected based on Table 13-1, computer and communication racks shall be capable of resisting seismic forces computed in accordance with Section 13.4.3 using a component importance factor, I_p, of 1.5.

13.8.5.4 Evaluation Requirements Buckling or racking failure of rack components, their connection to support structures, and type and stability of the supporting structure shall be considered in the evaluation. The effect of rack failure on equipment shall also be considered.

For the Operational Performance Level, computer and communication racks shall be analyzed or tested to demonstrate their ability preserve the functionality of the computer and communication equipment stored in the racks after an earthquake commensurate with the Seismic Hazard Level being considered.

13.8.6 Elevators

13.8.6.1 Definition and Scope Elevators shall include cabs and shafts and all equipment and equipment rooms associated with elevator operation, such as hoists, counterweights, cables, and controllers.

13.8.6.2 Component Behavior and Retrofit Methods Components of elevators shall be considered acceleration sensitive. Shafts and hoistway rails, which rise through multiple floors, shall be considered both acceleration and deformation sensitive.

Elevator components not conforming to the acceptance criteria of Section 13.8.6.3 shall be retrofitted in accordance with Section 13.5.

C13.8.6.2 Component Behavior and Retrofit Methods Components of elevators may become dislodged or derailed. Shaft walls and the construction of machinery room walls are often not engineered and must be considered in a way similar to that for other partitions. Shaft walls that are of unreinforced masonry or hollow tile must be considered with special care because failure of these components violates Life Safety Nonstructural Performance Level criteria.

Elevator machinery may be subject to the same damage as other heavy floor-mounted equipment. Electrical power loss renders elevators inoperable.

Retrofit measures include a variety of techniques taken from specific component sections for partitions, controllers, and machinery. Retrofit specific to elevator operation can include seismic shutoffs, cable restrainers, and counterweight retainers; such measures should be in accordance with ASME A17.1.

13.8.6.3 Acceptance Criteria Acceptance criteria shall be applied in accordance with Section 13.3.

13.8.6.3.1 Life Safety Nonstructural Performance Level If the prescriptive procedure is selected based on Table 13-1, elevator components shall meet the prescriptive requirements of Section 13.4.2. If the analytical procedure is selected based on Table 13-1, elevator components shall be capable of resisting seismic forces computed in accordance with Section 13.4.3 using a component importance factor, I_p, of 1.0.

13.8.6.3.2 Position Retention Nonstructural Performance Level Elevators shall comply with the requirements of Section 13.6.10 of ASCE 7.

If the prescriptive procedure is selected based on Table 13-1, elevator components shall meet the prescriptive requirements of Section 13.4.2. If the analytical procedure is selected based on Table 13-1, elevator components shall be capable of resisting seismic forces computed in accordance with Section 13.4.3 using a component importance factor, I_p, of 1.0.

13.8.6.3.3 Operational Nonstructural Performance Level Elevators shall comply with the requirements of Section 13.6.10 of ASCE 7.

If the prescriptive procedure is selected based on Table 13-1, elevator components shall meet the prescriptive requirements of Section 13.4.2. If the analytical procedure is selected based on Table 13-1, elevator components shall be capable of resisting seismic forces computed in accordance with Section 13.4.3 using a component importance factor, I_p, of 1.5.

13.8.6.4 Evaluation Requirements The construction of elevator shafts shall be considered in the evaluation.

C13.8.6.4 Evaluation Requirements The possibility of displacement or derailment of hoistway counterweights and cables should be considered, as should the anchorage of elevator machinery.

13.8.7 Conveyors

13.8.7.1 Definition and Scope Conveyors shall include material conveyors, including all machinery and controllers necessary to operation.

13.8.7.2 Component Behavior and Retrofit Methods Conveyors shall be considered both acceleration and deformation sensitive.

Conveyors not conforming to the acceptance criteria of Section 13.8.7.3 shall be retrofitted in accordance with Section 13.5.

C13.8.7.2 Component Behavior and Retrofit Methods Conveyor machinery may be subject to the same damage as other heavy floor-mounted equipment. In addition, deformation of adjoining building materials may render the conveyor inoperable. Electrical power loss renders the conveyor inoperable.

Retrofit of the conveyor involves prescriptive procedures using special skills provided by the conveyor manufacturer.

13.8.7.3 Acceptance Criteria Acceptance criteria shall be applied in accordance with Section 13.3.

13.8.7.3.1 Life Safety Nonstructural Performance Level Conveyors need not be retrofitted for the Life Safety Nonstructural Performance Level.

13.8.7.3.2 Position Retention Nonstructural Performance Level If the analytical procedure is selected based on Table 13-1, conveyors shall be capable of resisting seismic forces computed in accordance with Section 13.4.3 using a component importance factor, I_p, of 1.0. If the prescriptive procedure is selected based on Table 13-1, conveyors shall meet prescriptive standards in accordance with Section 13.4.2.

13.8.7.3.3 Position Retention Nonstructural Performance Level If the analytical procedure is selected based on Table 13-1, conveyors shall be capable of resisting seismic forces computed in accordance with Section 13.4.3 using a component importance factor, I_p, of 1.5. If the prescriptive procedure is selected based on Table 13-1, conveyors shall meet prescriptive standards in accordance with Section 13.4.2.

13.8.7.4 Evaluation Requirements The stability of machinery shall be considered in the evaluation.

For the Operational Performance Level, conveyors shall be analyzed or tested to demonstrate their ability to resume function after an earthquake commensurate with the Seismic Hazard Level being considered.

CHAPTER 14
SEISMIC ISOLATION AND ENERGY DISSIPATION

14.1 SCOPE

This chapter sets forth requirements for the systematic evaluation and retrofit of buildings using seismic isolation and energy dissipation systems. Section 14.2 provides analysis and design criteria for seismic isolation systems. Section 14.3 provides analysis and design criteria for passive energy dissipation systems. Section 14.4 provides criteria for other control systems. Any of the Performance Objectives are permitted for seismic isolation and passive energy dissipation retrofits.

Whenever either the Reduced Performance Objective of Section 2.2.3.1 or the Partial Retrofit Objective of Section 2.2.3.2 is selected, the devices must be able to achieve performance responses larger than those used for the Reduced Performance Objectives.

Components and elements in buildings with seismic isolation and passive energy dissipation systems shall also comply with the requirements of Chapters 1 through 13 of this standard, unless they are modified by the requirements of this chapter. Independent design review is required for all retrofit schemes that use either seismic isolation or energy dissipation systems.

C14.1 SCOPE

The basic form and formulation of requirements for seismic isolation and passive energy dissipation systems have been established and coordinated with the performance objectives, target Building Performance Levels, and Seismic Hazard Level criteria of Chapter 2 and the linear and nonlinear procedures of Chapter 7.

Criteria for modeling the stiffness, strength, and deformation properties of conventional structural components of buildings with seismic isolation or passive energy dissipation systems are given in Chapters 9 through 12.

Limited guidance for other special seismic protective systems, including active control systems, hybrid active and passive systems, and tuned mass and liquid dampers, is provided in this chapter. Seismic isolation and passive energy dissipation systems are viable design strategies that have been used for seismic retrofit of a number of buildings. Other special seismic protective systems—including active control, hybrid combinations of active and passive energy devices, and tuned mass and liquid dampers—may also provide practical solutions in the near future. These systems are similar in that they enhance performance during an earthquake by modifying the building's response characteristics.

Seismic isolation and passive energy dissipation systems may not be appropriate design strategies for buildings that have only Limited Performance Objectives. In general, these systems are most applicable to the retrofit of buildings whose owners desire superior earthquake performance and can afford the special costs associated with the design, fabrication, and installation of seismic isolators and/or passive energy dissipation devices. These costs are typically offset by the reduced need for stiffening and strengthening measures that would otherwise be required to meet Performance Objectives.

Seismic isolation and passive energy dissipation systems include a wide variety of concepts and devices. In most cases, these systems and devices are implemented with some additional conventional strengthening of the structure; in all cases, they require evaluation of existing building components. As such, this chapter supplements the requirements of other chapters of this document with additional criteria and methods of analysis that are appropriate for buildings retrofitted with seismic isolators and/or passive energy dissipation devices.

Conceptually, isolation reduces response of the superstructure by decoupling the building from the ground. Typical isolation systems reduce forces transmitted to the superstructure by lengthening the period of the building and adding some amount of damping.

Added damping is an inherent property of most isolators, but it may also be provided by supplemental passive energy dissipation devices installed across the isolation interface. Under favorable conditions, the isolation system can reduce drift in the superstructure by a factor of at least two—and sometimes by as much as a factor of five—from that which would occur if the building were not isolated. Accelerations are also reduced in the structure, although the amount of reduction depends on the force-deflection characteristics of the isolators and may not be as significant as the reduction of drift. Reduction of drift in the superstructure protects structural components and elements, as well as nonstructural components sensitive to drift-induced damage. Reduction of acceleration protects nonstructural components that are sensitive to acceleration-induced damage.

Passive energy dissipation devices add damping (and sometimes stiffness) to the building. A wide variety of passive energy dissipation devices are available, including viscous fluid dampers, viscoelastic materials, and hysteretic devices. Ideally, passive energy dissipation devices dampen earthquake excitation of the structure that would otherwise cause higher levels of response and damage to components of the building. Under favorable conditions, passive energy dissipation devices can reduce drift of the structure by a factor of up to three (if no stiffness is added) and by larger factors if the devices also add stiffness to the structure. Passive energy dissipation devices also reduce force in the structure—provided the structure is responding nearly elastically—but are not expected to significantly reduce force in structures that are responding beyond yield, resulting in structural damage.

Active control damping systems sense and resist building motion, either by applying an external force or by modifying structural properties of active components (e.g., so-called smart braces). Tuned mass or liquid dampers modify properties and add damping to key building modes of vibration. These systems can be complicated to model and analyze and require specialized knowledge and experience. Independent design review is necessary for the design and construction of these systems.

Special seismic systems, such as isolation or passive energy dissipation systems, should be considered early in the design process and should be based on the Performance Objectives established for the building. Whether a special seismic system is found to be the appropriate or optimum design strategy for building retrofit depends primarily on the target Building Performance Level required at the specified Seismic Hazard Level. In general, special protective seismic systems are found to be more attractive as a retrofit strategy for buildings that have higher performance objectives than for ordinary buildings (i.e., higher Building Performance Levels and/or more severe Seismic Hazard Levels).

The seismic response benefits generated from using an isolation retrofit typically are not very effective or economical for the lowest performance objectives. In general, isolation systems provide significant protection to the building structure, nonstructural components, and contents but at a cost that may not be the most feasible option where the budget and Performance Objectives are modest. The seismic response benefits generated from using energy dissipation retrofit can be effective and/or economical for the lowest Performance Objectives.

Passive energy dissipation systems have a wider range of building height applications than do isolation systems. For the tall buildings, passive energy dissipation systems should be considered as a prudent and potentially cost-effective design strategy where performance objectives include the Damage Control Structural Performance Level. Certain passive energy dissipation devices are quite economical and might be practical for retrofits that address only Limited Performance Objectives. In general, however, passive energy dissipation systems are more likely to be an appropriate design strategy where the desired performance objective is higher. Other criteria may also influence the decision to use passive energy dissipation devices, because these devices can also be useful for control of building response caused by wind or mechanical loads.

Whenever either the Reduced Performance Objective of Section 2.2.3.1 or the Partial Retrofit Objective of Section 2.2.3.2 is selected, the structural design requirements are less than those required for the potential seismic event. There is concern that response to this potential earthquake could exceed the design limits of the seismic isolation or passive energy dissipation devices, leading to device failure. Failure of these devices could result in catastrophic performance of the building. Therefore, the displacement design of these devices for these two lower Performance Objectives requires a conservative multiplier on the lower level multipliers or the use of a BSE-2E analysis to determine an appropriate device design displacement.

14.2 SEISMIC ISOLATION SYSTEMS

14.2.1 General Requirements Seismic isolation systems using seismic isolators, classified as either elastomeric or sliding, as defined in Section 14.2.2, shall comply with the requirements of Section 14.2. Properties of seismic isolation systems shall be based on Section 14.2.2. Seismic isolation systems shall be designed and analyzed in accordance with Section 14.2.3. Linear and nonlinear analyses shall be performed, as required by Section 14.2.3, in accordance with Sections 14.2.4 and 14.2.5, respectively. Nonstructural components shall be rehabilitated in accordance with Section 14.2.6. Additional requirements for seismic isolation systems as defined in Section 14.2.7 shall be met. Seismic isolation systems shall be tested in accordance with Section 14.2.8.

The seismic isolation system shall include wind-restraint and tie-down systems, if such systems are required by this standard. The isolation system also shall include supplemental energy dissipation devices, if such devices are used to transmit force between the structure above the isolation system and the structure below the isolation system.

For seismically isolated structures, the coefficients C_0, C_1, C_2, and J defined in Chapter 7, shall be taken as 1.0.

C14.2.1 General Requirements Analysis methods and design criteria for seismic isolation systems are based on criteria for the Performance Objectives of Chapter 2.

The methods described in this section augment the analysis requirements of Chapter 7. The analysis methods and other criteria of this section are based largely on FEMA P-750, *NEHRP Recommended Seismic Provisions for Regulations for New Buildings and Other Structures* (2009c).

Seismic isolation has typically been used as a retrofit strategy that enhances the performance of the building above that afforded by conventional stiffening and strengthening schemes. Seismic isolation retrofit projects have targeted performance at least equal to, and commonly exceeding, the Basic Performance Objective for Existing Buildings of this standard, effectively achieving a target Building Performance Level of Immediate Occupancy or better.

A number of buildings rehabilitated with seismic isolators have been historic. For these projects, seismic isolation reduced the extent and intrusion of seismic modifications on the historical fabric of the building that would otherwise be required to meet desired performance levels.

14.2.2 Mechanical Properties and Modeling of Seismic Isolation Systems Seismic isolators shall be classified as either elastomeric or sliding. Elastomeric isolators shall include any one of the following: high-damping rubber bearings, low-damping rubber bearings, or low-damping rubber bearings with a lead core. Sliding isolators shall include flat assemblies or shall have a curved surface, such as the friction pendulum system. Rolling systems shall be characterized as a subset of sliding systems. Rolling isolators shall be flat assemblies or shall have a curved or conical surface, such as the ball and cone system. Isolators that cannot be classified as either elastomeric or sliding are not addressed in this standard.

C14.2.2 Mechanical Properties and Modeling of Seismic Isolation Systems A seismic isolation system is the collection of all individual seismic isolators (and separate wind restraint and tie-down devices, if such devices are used to meet the requirements of this standard). Seismic isolation systems may be composed entirely of one type of seismic isolator, a combination of different types of seismic isolators, or a combination of seismic isolators acting in parallel with energy dissipation devices (i.e., a hybrid system).

Elastomeric isolators are typically made of layers of rubber separated by steel shims.

14.2.2.1 General Design Properties Nominal design properties for each isolator size shall be established per Section 14.2.2.1.1 and upper and lower bound property variations shall be established per Section 14.2.2.1.2 through 14.2.2.1.4.

14.2.2.1.1 Nominal Design Properties Nominal design properties for each isolator size shall be established from either project-specific prototype test data or prior prototype tests on an isolator of similar size. These nominal design properties shall be modified by property variation or lambda (λ) factors to account for manufacturing tolerances, prototype test issues such as first-cycle effects and long-term environmental effects to develop upper- and lower-bound properties for the design and analysis of the isolated structure, as specified in Section 14.2.2.1.4.

C14.2.2.1.1 Nominal Design Properties In the early applications of base isolation technology, the design properties were obtained from prototype tests, which generally led to an extended design process. As the number of applications has increased, the prototype test data that are now available from manufacturers of the more widely used systems have increased significantly, and it is now possible to get reasonably accurate nominal design properties from the manufacturers. These nominal design properties can either be confirmed by prototype tests later in the design or construction phase of the project, or similarity may be used to accept the prototype tests on which the nominal properties are based. This enables the design process to proceed like a conventional project.

Results from testing of a small number of prototype isolators may not necessarily provide the best estimate of the nominal design properties and the associated upper- and lower-bound specification limits. This potential discrepancy occurs because a single test result may be at the upper or lower end of the range of a larger population.

14.2.2.1.2 Specification Tolerance on Nominal Design Properties Lambda factors shall be established ($\lambda_{spec,upper}$ and $\lambda_{spec,lower}$) for the permissible variation of the average of the manufacturing production test values from the nominal design value for each isolator size. This tolerance shall be the same as that used for the procurement of isolators for construction, and it is also used to establish the upper- and lower-bound properties of the isolators for use in the design and analysis process (Section 14.2.2.1.4).

C14.2.2.1.2 Specification Tolerance on Nominal Design Properties As part of the design process, it is important to recognize that there are variations in the nominal properties caused by manufacturing tolerances. This section specifies the lambda factors for the manufacturing process, and these are then used with the property modification factors in Section 14.2.2.1.3 to determine the upper- and lower-bound properties of the isolators in Section 14.2.2.1.4 for use in the design and analysis process.

Recommended values for the specification tolerance on the average properties of all isolators of a given size isolator are typically in the ±10% to ±15% range. For a ±10% specification tolerance, the corresponding lambda factors would be $\lambda_{spec,upper} = 1.10$ and $\lambda_{spec,lower} = 0.90$. Variations in individual isolator properties may be greater than the tolerance on the average properties of all isolators of a given size, as discussed in Section 14.2.7.2.9. It is recommended that the isolator manufacturer be consulted when establishing these tolerance values.

The wider specification tolerance for individual isolators should be taken into account for isolator connection design by amplifying the upper-bound analysis forces by the ratio of the lambda factors, e.g., 1.15/1.10 for the example values here.

14.2.2.1.3 Property Variation (λ) Factors Property variation or lambda (λ) factors shall be established for each isolator type to account for both environmental and aging effects and prototype test properties such as first-cycle effects that are not accounted for in the nominal design values. Lambda (λ) factors for each significant effect shall be established that describe the expected variations above and below the nominal value (1.0) and shall be designated $\lambda_{effect,upper}$ and $\lambda_{effect,lower}$.

Upper-bound property modification factors, $\lambda_{upper,PM}$, shall be determined for each isolator type by computing the product of all the upper-bound lambda (λ) factors for environmental and testing effects to get $\lambda_{upper,PM}$, and similarly for all the lower-bound lambda (λ) factors to get $\lambda_{lower,PM}$.

The system property adjustment factor (SPAF) used to modify these values in Section 14.2.2.1.4 is 0.67 for all Performance Levels.

C14.2.2.1.3 Property Variation (λ) Factors Section 14.2.7.1 requires the isolation system to be designed with consideration given to other environmental conditions, including aging effects, creep, fatigue, and operating temperatures. Prototype tests may also indicate the need to address velocity effects, first-cycle effects, and other effects that cause the isolator test properties to vary from the nominal design properties. Lambda factors are not required for any behavior that can be directly accounted for in the analytical model of the isolator used in the analysis. This section provides the lambda factor methodology for addressing these potential variations in isolator properties from the nominal design properties. These variations are then included in the upper- and lower-bound isolator properties in Section 14.2.2.1.4.

Lambda factor values describe deviations in properties from unity. For example, if aging effects are expected to cause a 15% increase in isolator effective stiffness over the considered design life, then the corresponding lambda factor is 1.15.

For elastomeric isolators, lambda factors should address axial–shear interaction; bilateral deformation; load history, including first-cycle effects and the effects of scragging of virgin elastomeric isolators; temperature; and other environmental loads and aging effects over the design life of the isolator.

For sliding isolators, lambda factors should address contact pressure, rate of loading or velocity, bilateral deformation, temperature, contamination, and other environmental loads and aging effects over the design life of the isolator.

The system property adjustment factor (SPAF) was developed on the basis that a full and simultaneous increase in each parameter does not occur at the same time. This work originated with a report by Constantinou et al. (1999) that was then incorporated into the AASHTO *Guide Specifications for Seismic Isolation Design* (1999 and 2010) and was also included in the recommended AASHTO *LRFD Bridge Design Specifications* (2012).

14.2.2.1.4 Upper- and Lower-Bound Design and Analysis Properties Upper- and lower-bound design and analysis properties for each isolator size shall be determined for each modeling parameter as follows:

$$\text{Upper-bound design property} = \text{Nominal design property} \times \left\{\lambda_{spec,upper}\left[1+\text{SPAF}(\lambda_{upper,PM}-1)\right]\right\} \tag{14-1a}$$

$$\text{Upper-bound design property} > 1.3 \times \text{Nominal design property} \tag{14-1b}$$

$$\text{Lower-bound design property} = \text{Nominal design property} \times \left\{\lambda_{spec,lower}\left[1-(\text{SPAF}(1-\lambda_{lower,PM})\right.\right. \tag{14-2a}$$

$$\text{Lower-bound design property} < 0.85 \times \text{Nominal design property} \tag{14-2b}$$

Table C14-1. Upper-Bound Multiplier Using AASHTO Lambda Factors

Variable	Unlubricated PTFE (μ)	Lubricated PTFE	Plain Elastomerics (K)	Lead Rubber (K2)
Aging (λ_a)	1.2	1.4	1.1	1.1
Velocity (λ_v)[a]	[b]	[b]	1	1
Contamination (λ_c)	1.1	1.1	1	1
Temperature (λ_t)	1.1	1.3	1.1	1.1
Scragging (λ_{scrag})[c]	1	1	1	1
Assumed lambda factor for first-cycle effect	1.10	1.10	1.10	1.10
Multiple of all lambda factors	1.60	2.20	1.33	1.33
Upper-bound with 0.67 SPAF	1.40	1.81	1.22	1.22
Lambda factor for specification tolerance	1.10	1.10	1.10	1.10
Upper-bound multiplier, including specification tolerance with 0.67 SPAF	1.54	1.99	1.34	1.34

[a]Sometimes first-cycle effect: Q_d for low-damping rubber bearings with a lead core.
[b]By test-design value.
[c]First-cycle effect for high-damping rubber bearings.

Upper-bound strength, stiffness, and energy dissipation shall be considered together as the upper-bound design and analysis case, and lower-bound strength, stiffness, and energy dissipation shall be considered together as the lower-bound design and analysis case. At a minimum, upper- and lower-bound properties shall be established for loads and displacements corresponding to each hazard level being evaluated.

C14.2.2.1.4 Upper- and Lower-Bound Design and Analysis Properties This section provides the methodology for combining both the specification tolerances and the environmental and prototype test property variation factors to obtain upper- and lower-bound design and analysis properties for each isolator size.

An upper- and lower-bound design and analysis property shall be established for each modeling parameter required for the selected method of analysis. For example, effective stiffness and damping are necessary for linear methods, and initial stiffness, postyield stiffness, and strength are necessary for nonlinear methods.

The AASHTO recommended lambda factors are acceptable for addressing the environmental and prototype testing effects, but other rational judgments by the licensed design professional may also be acceptable. A summary of results from using the AASHTO recommendations for the upper-bound properties is provided in Table C14-1 for a SPAF of 0.67, a first-cycle lambda factor of 1.1, and a specification tolerance of ±10%.

Temperature effects in bridge applications may be more severe than in typical building applications. In addition, some of the recommended factors in AASHTO (e.g., for the velocity effect on Q_d for lead rubber isolators or for the scragging effect for high damping rubber isolators) may be captured as first-cycle effects in prototype testing and should not be accounted for twice.

14.2.2.2 Mechanical Properties of Seismic Isolators

14.2.2.2.1 Elastomeric Isolators For mathematical modeling of isolators, mechanical characteristics based on analysis or available material test properties shall be permitted. For design, mechanical characteristics shall be based on tests of isolator prototypes in accordance with Section 14.2.8.

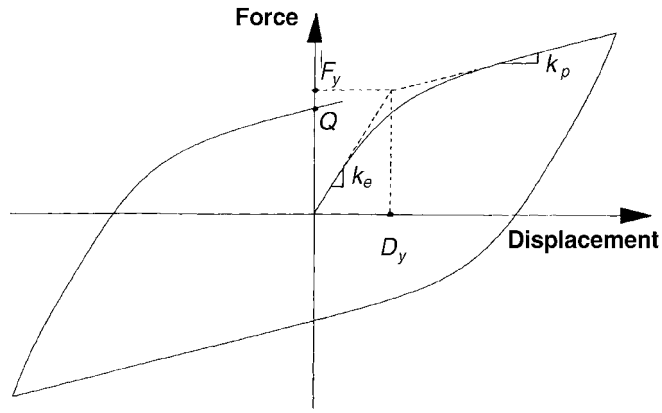

FIG. C14-1. Idealized Hysteretic Force–Displacement Relation of a Lead and Rubber Bearing

C14.2.2.2.1 Elastomeric Isolators Elastomeric bearings represent a common means for introducing flexibility into an isolated structure. They consist of thin layers of natural rubber that are vulcanized and bonded to steel plates. Natural rubber exhibits a complex mechanical behavior, which can be described simply as a combination of viscoelastic and hysteretic behavior. Low-damping natural rubber bearings exhibit essentially linearly elastic and linearly viscous behavior at large shear strains. The effective damping is typically less than 0.07 equivalent viscous damping for shear strains in the range of 0 to 2.0.

Leadrubber bearings are generally constructed of low-damping natural rubber with a preformed central hole into which a lead core is press fitted. Under lateral deformation, the lead core deforms in almost pure shear, yields at low levels of stress (approximately 8 to 10 MPa in shear at normal temperature), and produces hysteretic behavior that is stable over many cycles. Unlike mild steel, lead recrystallizes at normal temperature (about 20 °C), so that repeated yielding does not cause fatigue failure. Lead and rubber bearings generally exhibit characteristic strength that ensures rigidity under service loads. Fig. C14-1 shows an idealized force–displacement relation of a lead and rubber bearing. The characteristic strength, Q, is related to the lead plug area, A_p, and the shear yield stress of lead, σ_{YL}:

$$Q = A_p \sigma_{YL} \tag{C14-1}$$

The postyield stiffness, k_p, is typically higher than the shear stiffness of the bearing without the lead core:

$$k_p = \frac{A_r G f_L}{\sum t} \tag{C14-2}$$

where A_r = bonded rubber area;
Σt = total rubber thickness;
G = shear modulus of rubber (typically computed at shear strain of 0.5); and
f_L = a factor larger than unity.

Typically, f_L is 1.15, and the elastic stiffness ranges between 6.5 to 10 times the postyield stiffness.

The behavior of leadrubber bearings may be represented by a bilinear hysteretic model. Computer programs *3D-BASIS* (Nagarajaiah et al. 1991, Reinhorn et al. 1994, and Tsopelas et al. 1994), *ETABS* (CSI 2012a), and SAP2000 (CSI 2012b)

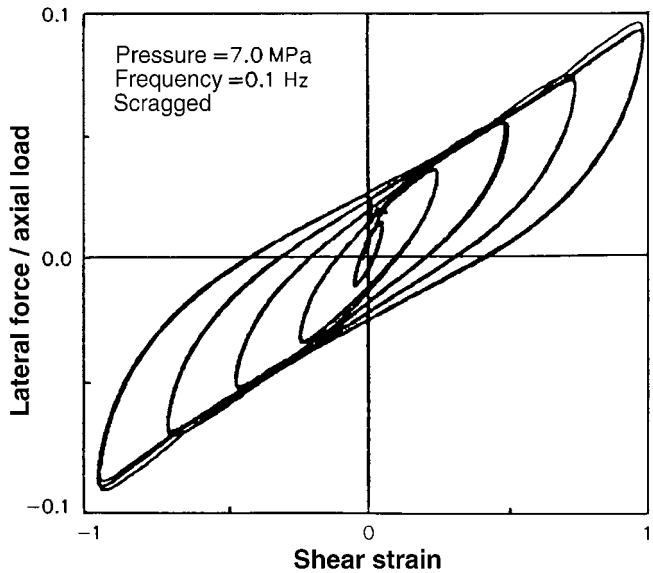

FIG. C14-2. Force–Displacement Loops of a High-Damping Rubber Bearing

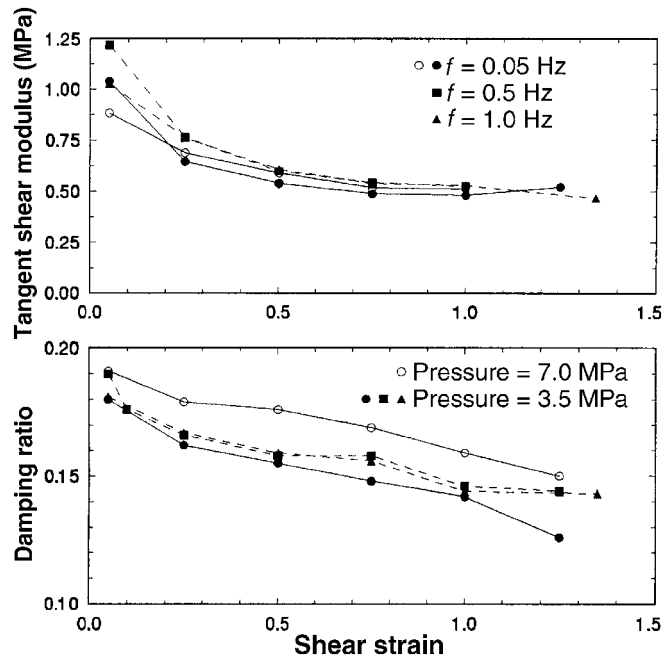

FIG. C14-3. Tangent Shear Modulus and Effective Damping Ratio of High-Damping Rubber Bearing

have the capability of modeling hysteretic behavior for isolators. These models typically require definition of three parameters, namely, the postyield stiffness k_p, the yield force F_y, and the yield displacement D_y. For leadrubber bearings in which the elastic stiffness is approximately equal to 6.5 k_p, the yield displacement can be estimated as

$$D_y = \frac{Q}{5.5k_p} \tag{C14-3}$$

The yield force is then given by

$$F_y = Q + k_p D_y \tag{C14-4}$$

High-damping rubber bearings are made of specially compounded rubber that exhibits effective damping between 0.10 and 0.20 of critical. The increase in effective damping of high-damping rubber is achieved by the addition of chemical compounds that may also affect other mechanical properties of rubber. Fig. C14-2 shows representative force–displacement loops of a high-damping rubber bearing under scragged conditions.

Scragging is the process of subjecting an elastomeric bearing to one or more cycles of large-amplitude displacement. The scragging process modifies the molecular structure of the elastomer and results in more stable hysteresis at strain levels lower than that to which the elastomer was scragged. Although it is usually assumed that the scragged properties of an elastomer remain unchanged with time, studies by Cho and Retamal (1993) and Murota et al. (1994) suggest that partial recovery of unscragged properties is likely. The extent of this recovery is dependent on the elastomer compound.

Mathematical models capable of describing the transition between virgin and scragged properties of high-damping rubber bearings are not yet available. It is appropriate in this case to perform multiple analyses with stable hysteretic models and to obtain bounds on the dynamic response. A smooth, bilinear hysteretic model that is capable of modeling the behavior depicted in Fig. C14-1 is appropriate for such analyses, as long as the peak shear strain is below the stiffening limit of approximately 1.5 to 2.0, depending on the rubber compound. Beyond this strain limit, many elastomers exhibit stiffening behavior, with tangent stiffness approximately equal to twice the tangent stiffness before initiation of stiffening. For additional information, refer to Tsopelas and Constantinou (1994).

To illustrate the calculations of parameters from test data on prototype bearings, Fig. C14-3 shows experimentally determined properties of the high-damping rubber bearings, for which loops are shown in Fig. C14-2. The properties identified are the tangent shear modulus, G, and the effective damping ratio, β_{eff} (described by Eq. C14-18), which is now defined for a single bearing (rather than the entire isolation system), under scragged conditions. With reference to Fig. C14-1, G is related to the postyielding stiffness k_p.

$$k_p = \frac{GA}{\Sigma t} \tag{C14-5}$$

where A is the bonded rubber area. The results of Fig. C14-3 demonstrate that the tangent shear modulus and equivalent damping ratio are only marginally affected by the frequency of loading and the bearing pressure, within the indicated range for the tested elastomer. Different conclusions may be drawn from the testing of other high-damping rubber compounds.

The parameters of the bilinear hysteretic model may be determined by use of the mechanical properties G and β_{eff} at a specific shear strain, such as the strain corresponding to the design displacement D. The postyield stiffness k_p is determined from Eq. (C14-5), whereas the characteristic strength, Q, can be determined as

$$Q = \frac{\pi\beta_{eff} k_p D^2}{(2 - \pi\beta_{eff})D - 2D_y} \tag{C14-6}$$

where D_y is the yield displacement. The yield displacement is generally not known a priori. However, experimental data suggest that D_y is approximately equal to 0.05 to 0.1 times the total rubber thickness, Σt. With the yield displacement approximately determined, the model can be completely defined by

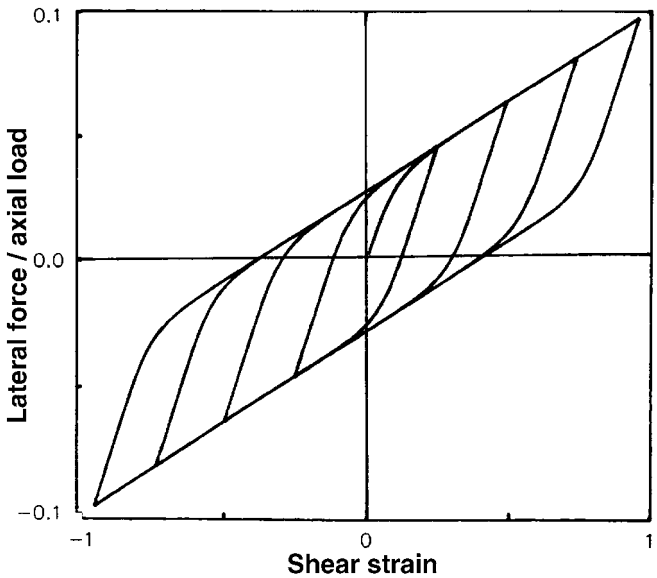

FIG. C14-4. Analytical Force–Displacement Loops of High-Damping Rubber Bearing

determining the yield force (Eq. C14-4). It should be noted that the characteristic strength may be alternatively determined from the effective stiffness, k_{eff} (Eq. C14-17), of the bearing, as follows:

$$Q = \frac{\pi \beta_{\text{eff}} k_{\text{eff}} D^2}{2(D - D_y)} \qquad \text{(C14-7)}$$

The effective stiffness is a more readily determined property than the postyielding stiffness. The effective stiffness is commonly used to obtain the effective shear modulus, G_{eff}, defined as

$$G_{\text{eff}} = \frac{k_{\text{eff}} \Sigma t}{A} \qquad \text{(C14-8)}$$

The behavior of the bearing for which the force–displacement loops are shown in Fig. C14-2 is now analytically constructed using the mechanical properties at a shear strain of 1.0 and a bearing pressure of 7.0 MPa. These properties are $G_{\text{eff}} = 0.50$ MPa and $\beta_{\text{eff}} = 0.16$. With the bonded area and total thickness of rubber known, and assuming $D_y = 0.1\Sigma t$, a bilinear hysteretic model was defined and implemented in the program *3D-BASIS*. The simulated loops are shown in Fig. C14-4, where it may be observed that the calculated hysteresis loop at shear strain of 1.0 agrees well with the corresponding experimental hysteresis loop. However, at lower peak shear strain, the analytical loops have a constant characteristic strength, whereas the experimental loops have a characteristic strength dependent on the shear strain amplitude. Nevertheless, the analytical model is likely to produce acceptable results where the design parameters are based on the mechanical properties at a strain corresponding to the design displacement.

Elastomeric bearings have finite vertical stiffness that affects the vertical response of the isolated structure. The vertical stiffness of an elastomeric bearing may be obtained from

$$k_v = \frac{E_c A}{\Sigma t} \qquad \text{(C14-9)}$$

where E_c is the compression modulus. Although a number of approximate empirical relations have been proposed for the calculation of the compression modulus, the correct expression for circular bearings is the following:

$$E_c = \left(\frac{1}{6 G_{\text{eff}} S^2} + \frac{4}{3K} \right)^{-1} \qquad \text{(C14-10)}$$

where K is the bulk modulus (typically assumed to have a value of 2,000 MPa) and S is the shape factor, which is defined as the ratio of the loaded area to the perimeter area of a single rubber layer (Kelly 1993). For a circular bearing of bonded diameter ϕ and rubber layer thickness t, the shape factor is given by

$$S = \frac{\phi}{4t} \qquad \text{(C14-11)}$$

Seismic elastomeric bearings are generally designed with a large shape factor, typically 12 to 20. Considering an elastomeric bearing design with $S = 15$, $G_{\text{eff}} = 1$ MPa, and $K = 2{,}000$ MPa, the ratio of vertical stiffness (Eq. C14-9) to effective horizontal stiffness (Eq. C14-8) is approximately equal to 700. Thus, the vertical period of vibration of a structure on elastomeric isolation bearings is about 26 times (i.e., $\sqrt{700}$) less than the horizontal period, on the order of 0.1 s. This value of vertical period provides potential for amplification of the vertical ground acceleration by the isolation system. The primary effect of this amplification is to change the vertical load on the bearings, which may need to be considered for certain design applications.

Another consideration in the design of seismically isolated structures with elastomeric bearings is reduction in height of a bearing with increasing lateral deformation (Kelly 1993). Whereas this reduction of height is typically small, it may be important where elastomeric bearings are combined with other isolation components that are vertically rigid (such as sliding bearings). In addition, incompatibilities in vertical displacements may lead to a redistribution of loads.

14.2.2.2.2 Sliding Isolators Mechanical characteristics for use in mathematical models shall be based on analysis and available material test properties. Verification of isolator properties used for design shall be based on tests of isolator prototypes, in accordance with Section 14.2.8.

C14.2.2.2.2 Sliding Isolators Sliding bearings limit the transmission of force to an isolated structure to a predetermined level. Although this limit is desirable, the lack of significant restoring force can result in significant variations in the peak displacement response and can result in permanent offset displacements. To avoid these undesirable features, sliding bearings are typically used in combination with a restoring force mechanism.

The lateral force developed in a sliding bearing can be defined as

$$F = \frac{N}{R} D + \mu_s N \operatorname{sgn}(\dot{D}) \qquad \text{(C14-12)}$$

where D = displacement;
$\dot{D}$ = sliding velocity;
R = radius of curvature of sliding surface;
μ_s = coefficient of sliding friction;
N = normal load on the bearing; and
$\operatorname{sgn}(\dot{D})$ = sign of sliding velocity vector; +1 or −1.

The normal load consists of the gravity load, W, the effect of vertical ground acceleration, $\ddot{D}_v$, and the additional seismic force caused by overturning moment, P_s:

$$N = W \left(1 + \frac{\ddot{D}_v}{g} + \frac{P_s}{W} \right) \qquad \text{(C14-13)}$$

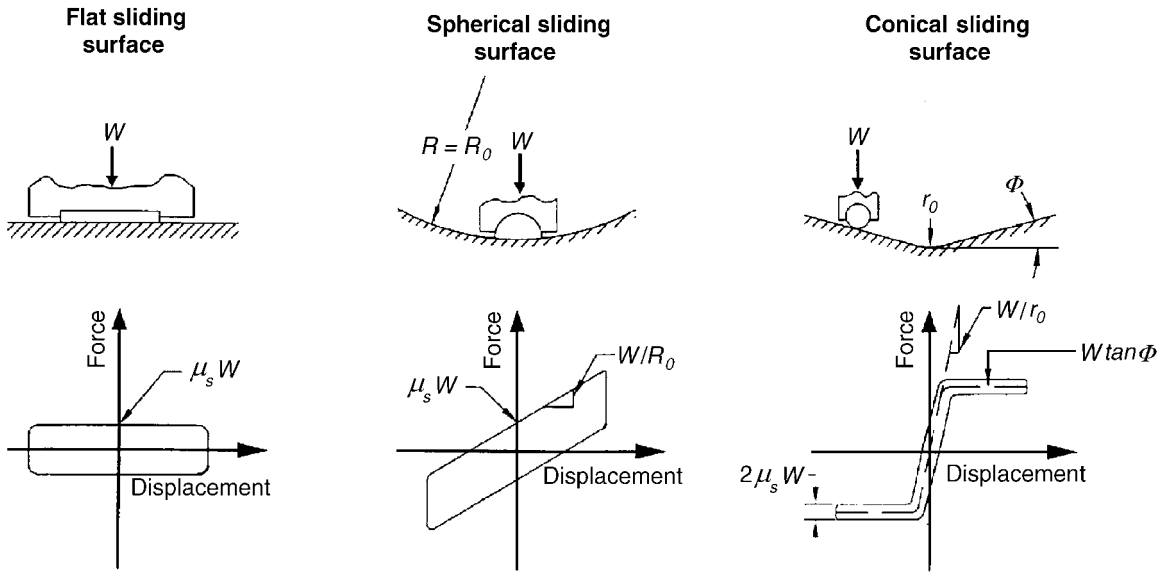

FIG. C14-5. Idealized Force–Displacement Loops of Sliding Bearings

The first term in Eq. (C14-13) denotes the restoring force component, and the second term describes the friction force. For flat sliding bearings, the radius of curvature is infinite, so the restoring force term in Eq. (C14-13) vanishes. For a spherical sliding surface (Zayas et al. 1987), the radius of curvature is constant, so the bearing exhibits a linear restoring force; that is, under constant gravity load the stiffness is equal to W/R_o, where R_o is the radius of the spherical sliding surface. Where the sliding surface takes a conical shape, the restoring force is constant. Fig. C14-5 shows idealized force–displacement loops of sliding bearings with flat, spherical, and conical surfaces.

Sliding bearings with either a flat or single curvature spherical sliding surface are typically made of polytetrafluoroethylene (PTFE) or PTFE-based composites in contact with polished stainless steel. The shape of the sliding surface allows large contact areas that, depending on the materials used, are loaded to average bearing pressures in the range of 7 to 70 MPa. For interfaces with shapes other than flat or spherical, the load needs to be transferred through a bearing, as illustrated in Fig. C14-5 for the conical sliding surface. Such an arrangement typically results in a very low coefficient of friction.

For bearings with large contact area, and in the absence of liquid lubricants, the coefficient of friction depends on several parameters, of which the three most important are the composition of the sliding interface, bearing pressure, and velocity of sliding. For interfaces composed of polished stainless steel in contact with PTFE or PTFE-based composites, the coefficient of sliding friction may be described by

$$\mu_s = f_{\max} - (f_{\max} - f_{\min})\exp\left(-a\left|\dot{U}\right|\right) \qquad \text{(C14-14)}$$

where parameters $f_{\min}$ and $f_{\max}$ describe the coefficient of friction at small and large velocities of sliding and under constant pressure, respectively, all as depicted in Fig. C14-6. Parameters $f_{\max}$, $f_{\min}$, and a depend on the bearing pressure, although only the dependency of $f_{\max}$ on pressure is of practical significance.

A good approximation to the experimental data (Constantinou et al. 1993) is

$$f_{\max} = f_{\max o} - (f_{\max o} - f_{\max p})\tanh \varepsilon p \qquad \text{(C14-15)}$$

where the physical significance of parameters $f_{\max o}$ and $f_{\max p}$ is as illustrated in Fig. C14-6. The term p is the instantaneous bearing pressure, which is equal to the normal load N computed by Eq. (C14-13), divided by the contact area; and ε is a parameter that controls the variation of $f_{\max}$ with pressure.

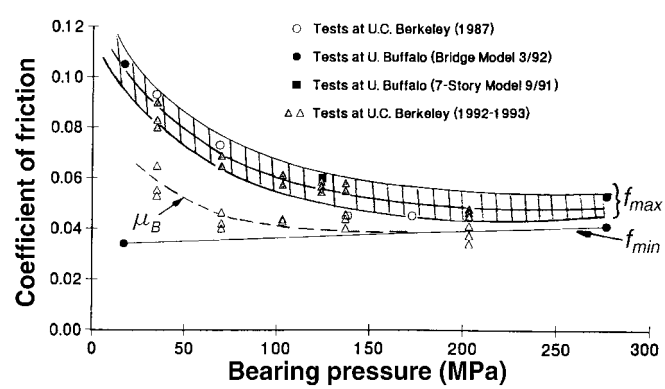

FIG. C14-6. Coefficient of Friction of PTFE-Based Composite in Contact with Polished Stainless Steel at Normal Temperature

Fig. C14-6 illustrates another feature of sliding bearings. On initiation of motion, the coefficient of friction exhibits a static or breakaway value, μ_B, which is typically higher than the minimum value $f_{\min}$. To demonstrate frictional properties, Fig. C14-6 shows the relation between bearing pressure and the friction coefficients $f_{\max}$, μ_B, and $f_{\min}$ of a PTFE-based composite material in contact with polished stainless steel at normal temperature. These data were compiled from testing of bearings in four different testing programs (Soong and Constantinou 1994).

Combined elastomeric and sliding isolation systems have been used in buildings in the United States. Japanese engineers have also used elastomeric bearings in combination with mild steel components that are designed to yield in strong earthquakes and enhance the energy dissipation capability of the isolation system (Kelly 1988). These mild steel components exhibit either elastoplastic behavior or bilinear hysteretic behavior with low postyielding stiffness. Moreover, fluid viscous energy dissipation devices have been used in combination with elastomeric bearings. The behavior of fluid viscous devices is described in Section 14.3.3.2.3.

Hybrid seismic isolation systems composed of elastomeric and sliding bearings should be modeled taking into account the likely significant differences in the relationships between vertical displacement as a function of horizontal displacement. The use of elastomeric and sliding isolators close to one another under vertically stiff structural framing elements (e.g., reinforced concrete shear walls) may be problematic and could result in significant redistributions of gravity loads.

14.2.2.3 Modeling of Isolators

14.2.2.3.1 General The upper- and lower-bound values of stiffness and damping defined in Section 14.2.2.1.4 shall be used in multiple analyses of the model to determine the range and sensitivity of response to design parameters.

14.2.2.3.2 Linear Models The restoring force, F, of an isolator shall be calculated as the product of effective stiffness, k_{eff}, and response displacement, D:

$$F = k_{\text{eff}} D \tag{14-3}$$

The effective stiffness, k_{eff}, of an isolator shall be calculated from test data using Eq. (14-17). The area enclosed by the force–displacement hysteresis loop shall be used to calculate the effective damping, β_{eff}, of an isolator using Eq. (14-18). Effective stiffness and effective damping shall be evaluated at all response displacements of design interest.

C14.2.2.3.2 Linear Models Linear procedures use effective stiffness, k_{eff}, and effective damping, β_{eff}, to characterize nonlinear properties of isolators.

For linear procedures (see FEMA 274, Section C14.2.3 [FEMA 1997b]), the seismic isolation system can be represented by an equivalent linearly elastic model. The force in a seismic isolation device is calculated as

$$F = k_{\text{eff}} D \tag{C14-16}$$

where all terms are as defined in Section 14.2.2.3.2 of this standard. The effective stiffness of the seismic isolation device may be calculated from test data as follows:

$$k_{\text{eff}} = \frac{|F^+| + |F^-|}{|\Delta^+| + |\Delta^-|} \tag{C14-17}$$

Fig. C14-7 illustrates the physical significance of the effective stiffness.

Analysis by a linear method requires that either each seismic isolator or groups of seismic isolators be represented by linear springs of either stiffness, k_{eff}, or the combined effective stiffness of each group. The energy dissipation capability of an isolation system is generally represented by effective damping. Effective damping is amplitude dependent and calculated at each displacement amplitude, as follows:

$$\beta_{\text{eff}} = \frac{1}{2\pi}\left(\frac{\Sigma E_D}{k_{\text{eff}} D^2}\right) \tag{C14-18}$$

where ΣE is the sum of the areas of the hysteresis loops of all isolators, and k_{eff} is the sum of the effective stiffnesses of all seismic isolation devices.

The application of Eq. (C14-16) through Eq. (C14-18) to the design of isolation systems is complicated if the effective stiffness and loop area depend on axial load. Multiple analyses are then required to establish bounds on the properties and response of the isolators. For example, sliding isolation systems exhibit such dependencies as described in Section C14.2.2.2.2. To account for these effects, the following procedure is proposed.

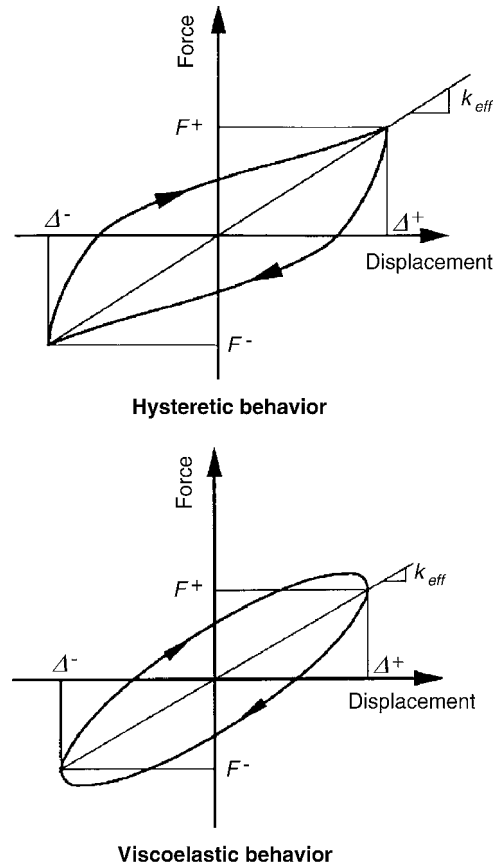

FIG. C14-7. Definition of Effective Stiffness of Seismic Isolation Devices

1. In sliding isolation systems, the relation between horizontal force and vertical load is substantially linear (see Eq. [C14-16]). Accordingly, the net effect of overturning moment on the mechanical behavior of a group of bearings is small and can be neglected.

   Al-Hussaini et al. (1994) provided experimental results that demonstrate this behavior up to the point of imminent bearing uplift. Similar results are likely for elastomeric bearings.
2. The effect of vertical ground acceleration is to modify the load on the isolators. If it is assumed that the building is rigid in the vertical direction, and axial forces caused by overturning moments are absent, the axial loads can vary between $W(1-\dot{U}/g)$ and $W(1+\dot{U}/g)$, where $\dot{U}$ is the peak vertical ground acceleration. However, recognizing that horizontal and vertical ground motion components are likely not correlated unless in the near field, it is appropriate to use a combination rule that uses only a fraction of the peak vertical ground acceleration. Based on the use of 50% of the peak vertical ground acceleration, maximum and minimum axial loads on a given isolator may be defined as

   $$N_C = W(1 \pm 0.20 S_{XS}) \tag{C14-19}$$

   where the plus sign gives the maximum value and the minus sign gives the minimum value. Equation (C14-19) is based on the assumption that the short-period spectral response parameter, S_{XS}, is 2.5 times the peak value of the vertical ground acceleration. For analysis for the

maximum considered earthquake, the axial load should be determined from

$$N_C = W(1 \pm 0.20 S_{MS}) \qquad \text{(C14-20)}$$

Eqs. (C14-19) and (C14-20) should be used with caution if the building is located in the near field of a major active fault. In this instance, expert advice should be sought regarding correlation of horizontal and vertical ground motion components.

Load N_C represents a constant load on isolators, which can be used for determining the effective stiffness and area of the hysteresis loop. To obtain these properties, the characteristic strength Q (see Fig. C14-7) is needed. For sliding isolators, Q can be taken as equal to $f_{\max} N_C$, where $f_{\max}$ is determined at the bearing pressure corresponding to load N_C. For example, for a sliding bearing with spherical sliding surface of radius R_0 (see Fig. C14-5), the effective stiffness and area of the loop at the design displacement D are

$$k_{\text{eff}} = \left(\frac{1}{R_0} + \frac{f_{\max}}{D} \right) N_C \qquad \text{(C14-21)}$$

$$\text{Loop area} = 4 f_{\max} N_C D \qquad \text{(C14-22)}$$

14.2.2.3.3 Nonlinear Models The nonlinear upper- and lower-bound force-deflection properties of isolators shall be explicitly modeled if nonlinear analysis procedures are used.

The inelastic (hysteretic) model of the isolators shall represent damping in the devices. Additional viscous damping shall not be included in the model of the isolators unless it is supported by rate-dependent tests of isolators. Viscous damping in the structural modes shall be separately considered.

C14.2.2.3.3 Nonlinear Models For dynamic nonlinear time-history analysis, the seismic isolation components should be explicitly modeled. FEMA 274, in Sections C14.2.2.2 through C14.2.2.4 (FEMA 1997b), presents relevant information. Where uncertainties exist and where aspects of behavior cannot be modeled, multiple analyses should be performed with appropriate lambda factors, as described in Section 14.2.2.1.3.

Inherent damping in isolated structures must be considered separately for the isolated and superstructure modes. For example, whereas a value of 5% may be appropriate for the superstructure, a value of 2% or less may be appropriate for the isolated modes. This issue may be further complicated where coupled isolated and superstructure modes occur.

For simplified nonlinear analysis, each seismic isolation component can be modeled by an appropriate rate-independent hysteretic model. Elastomeric bearings may be modeled as bilinear hysteretic components, as described in FEMA 274, Section C14.2.2.2 (1997b). Sliding bearings may also be modeled as bilinear hysteretic components with characteristic strength (see Fig. C14-5), given by

$$Q = f_{\max} N_C \qquad \text{(C14-23)}$$

where N_C is determined by either Eq. (C14-19) or Eq. (C14-20), and $f_{\max}$ is the coefficient of sliding friction at the appropriate sliding velocity. The postyield stiffness can then be determined as

$$k_p = \frac{N_C}{R} \qquad \text{(C14-24)}$$

where R is as defined in FEMA 274, Section C14.2.2.2.B (1997b). The yield displacement D_y in a bilinear hysteretic model of a sliding bearing should be very small, perhaps on the order of 2 mm. Alternatively, a bilinear hysteretic model for sliding bearings may be defined to have an elastic stiffness that is at least 100 times larger than the postyield stiffness, k_p.

Isolation devices that exhibit viscoelastic behavior as shown in Fig. C14-7 should be modeled as linearly elastic components with effective stiffness k_{eff}, as determined by Eq. (C14-21).

14.2.2.4 Isolation System and Superstructure Modeling

14.2.2.4.1 General Mathematical models of the isolated building, including the isolation system, the seismic-force-resisting system of the superstructure, other structural components and elements, and connections between the isolation system and the structure, shall meet the requirements of Chapter 7 and Sections 14.2.2.4.2 and 14.2.2.4.3.

14.2.2.4.2 Isolation System Model The isolation system shall be modeled using upper- and lower-bound deformation characteristics developed and verified by test in accordance with the requirements of Section 14.2.2.1.4.

The isolation system shall be modeled with sufficient detail to

1. Account for the spatial distribution of isolator units;
2. Calculate translation, in both horizontal directions, and torsion of the structure above the isolation interface, considering the most disadvantageous location of mass eccentricity;
3. Assess overturning and/or uplift forces on individual isolators;
4. Account for the effects of vertical load, bilateral load, and/or the rate of loading, if the force-deflection properties of the isolation system are dependent on one or more of these factors;
5. Assess forces caused by P-delta moments; and
6. Account for nonlinear components. Isolation systems with nonlinear components include systems that do not meet the criteria of Section 14.2.3.3.1, Item 2.

14.2.2.4.3 Superstructure Model The maximum displacement of each floor, the total design displacement, and the total maximum displacement across the isolation system shall be calculated using a model of the isolated building that incorporates the force–deformation characteristics of nonlinear components.

Calculation of design forces and displacements in primary components of the seismic-force-resisting system using linearly elastic models of the isolated structure above the isolation system shall be permitted if both of the following criteria are met:

1. Pseudo-elastic properties assumed for nonlinear isolation system components are based on the upper-bound effective stiffness of the isolation system; and
2. The seismic-force-resisting system remains linearly elastic for the earthquake demand level of interest.

A seismic-force-resisting system that meets both of the following criteria may be classified as linearly elastic:

1. For all deformation-controlled actions, Eq. (7-36) is satisfied using an m-factor equal to the lesser of the following: those specified for the component or Performance Level, 1.5 for the Immediate Occupancy and Life Safety Performance Level and 2.0 for the Collapse Prevention Performance Level; and
2. For all force-controlled actions, Eq. (7-37) is satisfied.

14.2.3 General Criteria for Seismic Isolation Design

14.2.3.1 General The design, analysis, and testing of the isolation system shall be based on the requirements of this section.

C14.2.3.1 General Criteria for the seismic isolation of buildings are divided into two sections:

1. Retrofit of the building; and
2. Design, analysis, and testing of the isolation system.

14.2.3.1.1 Stability of the Isolation System The stability of the vertical-load-carrying components of the isolation system shall be verified by analysis and test, as required by Section 14.2.8, for a lateral displacement equal to the total maximum displacement computed in accordance with Section 14.2.4.3.5 or Section 14.2.5.1.2, or for the maximum displacement allowed by displacement-restraint devices, if such devices are part of the isolation system.

14.2.3.1.2 Configuration Requirements The isolated building shall be classified as regular or irregular, as defined in Section 7.3.1.1, based on the structural configuration of the structure above the isolation system.

14.2.3.2 Seismic Hazard Criteria Seismic hazard criteria for the design earthquake, BSE-1X, and the maximum considered earthquake, BSE-2X, shall be established in accordance with Section 2.4 as modified by this section. The design Seismic Hazard Level shall be user specified and shall be permitted to be chosen equal to the BSE-1E or BSE-1N Seismic Hazard Level. The maximum considered earthquake, BSE-2X, shall be taken equal to the BSE-2E or the BSE-2N Seismic Hazard Level, depending on whether the BSE-1E or BSE-1N, respectively, is chosen for the design earthquake.

14.2.3.2.1 User-Specified Design Earthquake: BSE-1X For the design earthquake, BSE-1X, the following seismic hazard criteria shall be established:

1. Short-period spectral response acceleration parameter, S_{XS}, and spectral response acceleration parameter at 1.0 s, S_{X1}, in accordance with Section 2.4.1 or 2.4.2;
2. Five-percent-damped response spectrum of the design earthquake (where a response spectrum is required for linear procedures by Section 14.2.3.3.2, or to define ground motion acceleration histories); and
3. Ground motion acceleration histories compatible with the design earthquake spectrum, as specified in Section 2.4.2.2 (where ground motion acceleration histories are required for nonlinear procedures by Section 14.2.3.3.3).

14.2.3.2.2 Maximum Considered Earthquake: BSE-2X For the maximum considered earthquake, BSE-2X, the following seismic hazard criteria shall be established:

1. Short-period spectral response acceleration parameter, S_{XS}, and spectral response acceleration parameter at 1 s, S_{X1}, in accordance with Section 2.4.1 or 2.4.2;
2. Five-percent-damped site-specific response spectrum of the BSE-2E or BSE-2N (where a response spectrum is required for linear procedures by Section 14.2.3.3.2, or to define ground motion acceleration histories); and
3. Ground motion acceleration histories compatible with the BSE-2E or BSE-2N spectrum, as specified in Section 2.4.2.2 (where ground motion acceleration histories are required for nonlinear procedures by Section 14.2.3.3.3).

14.2.3.3 Selection of Analysis Procedure A linear or nonlinear analysis procedure in Sections 14.2.3.3.1 through 14.2.3.3.3 shall be used.

C14.2.3.3 Selection of Analysis Procedure Linear static and linear response spectrum procedures include prescriptive formulas and response spectrum analysis. Linear procedures based on formulas (similar to the seismic-coefficient equation required for design of fixed-base buildings) prescribe peak lateral displacement of the isolation system and define minimum design criteria that may be used for design of a limited class of isolated structures (without confirmatory dynamic analyses). These simple formulas are useful for preliminary design and provide a means of expeditious review of more complex calculations.

Response spectrum analysis is recommended for design of isolated structures that have either (1) a tall or otherwise flexible superstructure or (2) an irregular superstructure. For most buildings, response spectrum analysis does not predict significantly different displacements of the isolation system than those calculated by prescriptive formulas, provided that both calculations are based on the same effective stiffness and damping properties of the isolation system. The real benefit of response spectrum analysis is not in the prediction of isolation system response but, rather, in the calculation and distribution of forces in the superstructure. Response spectrum analysis permits the use of more detailed models of the superstructure that better estimate forces and deformations of components and elements considering flexibility and irregularity of the structural system.

Nonlinear procedures include the nonlinear static procedure (NSP) and the nonlinear dynamic procedure (NDP). The NSP is a static pushover procedure, and the NDP is based on nonlinear time-history analysis. The NSP or the NDP is required for isolated structures that do not have essentially linearly elastic superstructures (during BSE-2X demand). In this case, the superstructure would be modeled with nonlinear components.

Time-history analysis is required for isolated structures on very soft soil (i.e., Soil Profile Type E where shaking is strong, or Soil Profile Type F) that could shake the building with a large number of cycles of long-period motion, and for buildings with isolation systems that are best characterized by nonlinear models. Such isolation systems include the following:

1. Systems with more than about 30% effective damping (because high levels of damping can significantly affect higher mode response of the superstructure);
2. Systems that lack significant restoring force (because these systems may not stay centered during earthquake shaking);
3. Systems that are expected to exceed the sway-space clearance with adjacent structures (because impact with adjacent structures could impose large demands on the superstructure); and
4. Systems that are rate or load dependent (because their properties vary during earthquake shaking).

For the types of isolation systems described above, appropriate nonlinear properties must be used to model isolators. Linear properties could be used to model the superstructure, provided that the superstructure's response is essentially linearly elastic for BSE-2X demand.

The restrictions placed on the use of linear procedures effectively suggest that nonlinear procedures should be used for virtually all isolated buildings. However, lower-bound limits on isolation system design displacement and force are specified by this standard as a percentage of the demand prescribed by the linear formulas, even where dynamic analysis is used as the basis for design. These lower-bound limits on key design attributes ensure consistency in the design of isolated structures and serve as a "safety net" against gross underdesign.

14.2.3.3.1 Linear Procedures Linear static and linear response spectrum procedures shall be permitted for design of seismically isolated buildings, provided the following criteria are met:

1. The building is located on Soil Profile Type A, B, C, or D; or E if $S1 \leq 0.6$ for BSE-2X;
2. The isolation system meets all of the following criteria:
   2.1. The effective stiffness of the isolation system at the design displacement is greater than one-third of the effective stiffness at 20% of the design displacement;
   2.2. The isolation system is capable of producing a restoring force as specified in Section 14.2.7.2.4;
   2.3. Where considering analysis procedures, for the BSE-2X, the isolation system does not limit BSE-2X displacement to less than the ratio of the design spectral response acceleration at 1 s (S_{X1}) for the BSE-2X to that for the design earthquake times the total design displacement; and
3. The structure above the isolation system exhibits linear elastic behavior for the earthquake motions under consideration.

14.2.3.3.2 Response Spectrum Analysis Response spectrum analysis shall be used for design of seismically isolated buildings that meet any of the following criteria:

1. The building is more than 65 ft (19.8 m) in height above the isolation plane;
2. The effective period of the structure, T, is greater than 3 s, when evaluated for nominal isolator properties corresponding to BSE-2X demands;
3. The effective period of the isolated structure, T, is less than or equal to three times the elastic, fixed-base period of the structure above the isolation system when evaluated for nominal isolator properties corresponding to BSE-1X demands; or
4. The structure above the isolation plane is irregular in configuration as defined in Section 7.3.1.1.

14.2.3.3.3 Nonlinear Procedures Nonlinear static or response history analysis procedures shall be used for design of seismic-isolated buildings for which either of the following conditions apply:

1. The structure above the isolation plane cannot be classified linearly elastic as defined in Section 14.2.2.4.3 for the earthquake motions under consideration; and
2. The isolation system does not meet all of the criteria of Section 14.2.3.3.1.

Nonlinear acceleration response history analysis shall be performed for the design of seismically isolated buildings when both conditions (1) and (2) apply.

14.2.4 Linear Procedures

14.2.4.1 General Seismically isolated buildings for which linear analysis procedures are selected based on the criteria of Section 14.2.3.3 shall be designed and constructed to resist the earthquake displacements and forces specified in this section, at a minimum.

14.2.4.2 Deformation Characteristics of the Isolation System The deformation characteristics of the isolation system shall be based on upper- and lower-bound properties as defined in Section 14.2.2.1.4.

The deformation characteristics of the isolation system shall explicitly include the effects of the wind-restraint and tie-down systems and of supplemental energy dissipation devices, if such systems and devices are used to meet the design requirements of this standard.

14.2.4.3 Minimum Lateral Displacements Isolation system displacements shall be checked at the BSE-1X and BSE-2X hazard levels using the following formula and the lower-bound isolator properties established in Section 14.2.2.1.4. If a Limited Performance Objective (LPO) is selected and a BSE-2X analysis is not performed, then the maximum displacements shall be 200% of the calculated BSE-1X displacement.

14.2.4.3.1 Design Displacement The isolation system shall be designed and constructed to withstand, as a minimum, lateral earthquake displacements, D_D, that act in the direction of each of the main horizontal axes of the structure in accordance with Eq. (14-4):

$$D_D = \left(\frac{g}{4\pi^2}\right)\frac{S_{X1}T_D}{B_{D1}} \tag{14-4}$$

where S_{X1} is evaluated for the BSE-1X;

T_D = the effective period, in seconds, of the seismic-isolated structure at the design displacement in the direction under consideration;

B_{D1} = a numerical damping coefficient equalt to the value of B_1 per Section 2.4.1.7.1 at the value β_D; and

β_D = Isolation system equivalent viscous damping at the displacement for the hazard level under consideration, determined separately for upper- and lower-bound properties

14.2.4.3.2 Effective Period at the Design Displacement The effective period, T_D, of the isolated building at the design displacement for the BSE-1X hazard shall be determined using the lower-bound deformation characteristics of the isolation system in accordance with Eq. (14-5):

$$T_D = 2\pi\sqrt{\frac{W}{K_D g}} \tag{14-5}$$

where W = effective seismic weight; and

K_D is effective stiffness of the isolation system at the design displacement in the horizontal direction under consideration.

14.2.4.3.3 Maximum Displacement The maximum displacement of the isolation system, D_M, in the most critical direction of horizontal response shall be calculated in accordance with Eq. (14-6), unless governed by Section 14.2.4.3.

$$D_M = \left(\frac{g}{4\pi^2}\right)\frac{S_{X1}T_M}{B_{M1}} \tag{14-6}$$

where S_{X1} is evaluated for the BSE-2X;

T_M = the effective period, in seconds, of the seismic-isolated structure at the design displacement in the direction under consideration;

B_{M1} = a numerical damping coefficient equalt to the value of B_1 per Section 2.4.1.7.1 at the value β_M; and

β_M = Isolation system equivalent viscous damping at the displacement for the hazard level under consideration, determined separately for upper- and lower-bound properties.

14.2.4.3.4 Effective Period at the Maximum Displacement The effective period, T_M, of the isolated building at the maximum displacement for the BSE-2X event shall be determined using the lower-bound deformation characteristics of the isolation system in accordance with Eq. (14-7):

$$T_M = 2\pi\sqrt{\frac{W}{K_M g}} \tag{14-7}$$

where W = effective seismic weight; and

K_M is effective stiffness of the isolation system at the design displacement in the horizontal direction under consideration.

14.2.4.3.5 Total Displacement The total design displacement, D_{TD}, and the total maximum displacement, D_{TM}, of components of the isolation system shall include additional displacement caused by actual and accidental torsion calculated considering the spatial distribution of the effective stiffness of the isolation system at the design displacement and the most disadvantageous location of mass eccentricity.

The total design displacement, D_{TD}, and the total maximum displacement, D_{TM}, of components of an isolation system with a uniform spatial distribution of effective stiffness at the design displacement shall be taken as not less than that prescribed by Eqs. (14-8) and (14-9):

$$D_{TD} = D_D\left(1 + y\frac{12e}{b^2 + d^2}\right) \tag{14-8}$$

$$D_{TM} = D_M\left(1 + y\frac{12e}{b^2 + d^2}\right) \tag{14-9}$$

where y=the distance between the center of rigidity of the isolation system rigidity and the element of interest, measured perpendicular to the direction of seismic loading under consideration;

e = actual eccentricity measured in plan between the center of mass of the structure above the isolation interface and the center of rigidity of the isolation system, plus accidental eccentricity taken as 5% of the maximum building dimension perpendicular to the direction of force under consideration;

d = the longest plan dimension of the building;

b = the shortest plan dimension of the building, measured perpendicular to d;

D_D = the design displacement, at the center of rigidity of the isolation system in the direction under consideration per Eq. (14-4); and

D_M = the maximum displacement at the center of rigidity of the isolation system in the direction under consideration per Eq. (14-6).

A value for the total maximum displacement, D_{TM}, less than the value prescribed by Eq. (14-9), but not less than 1.1 times D_M, shall be permitted, provided the NDP or NSP analysis method is used.

14.2.4.4 Minimum Lateral Seismic Forces

14.2.4.4.1 Isolation System and Structural Components and Elements at or Below the Isolation System The isolation system, the foundation, and all other structural components and elements at or below the isolation system shall be designed and constructed to withstand a minimum lateral seismic force, V_b, using the upper-bound properties of the isolation system and BSE-1X as prescribed by Eq. (14-10):

$$V_b = K_{UB}D_D \tag{14-10}$$

where K_{UB} = the maximum effective stiffness of the isolation system based on upper-bound isolator stiffness properties; and

D_D = the design displacement, at the center of rigidity of the isolation system in the direction under consideration per Eq. (14-4).

The components at or below the isolation system shall be classified as force controlled. Force-controlled actions shall be determined based on V_b with C_1, C_2, and J = 1.0 for design.

14.2.4.4.2 Structural Components and Elements Above the Isolation System The components and elements above the isolation system shall be designed and constructed to resist a minimum lateral seismic force equal to the maximum value of V_b, prescribed by Eq. (14-10).

14.2.4.4.3 Limits on V_b The value of V_b shall be taken as not less than the following:

1. The base shear corresponding to the design wind load; and
2. The lateral seismic force required to fully activate the isolation system factored by 1.5 when considering nominal isolator properties, or factored by 1.0 when considering upper-bound properties.

C14.2.4.4.3 Limits on V_b Examples of lateral seismic forces required to fully activate the isolation system include the yield level of a softening system, the ultimate capacity of a sacrificial wind-restraint system, or the breakaway friction level of a sliding system.

14.2.4.4.4 Vertical Distribution of Force The level immediately above the isolation plane is defined as the isolation base level. The lateral seismic force apportioned to the superstructure above the isolation base level, V_{st}, shall be determined in accordance with Eq. (14-11):

$$V_{st} = V_b\left(\frac{W_s}{W}\right)^{(1-2.2\beta_D)} \tag{14-11}$$

where W_s = effective seismic weight of the structure above the isolation base level (kip or kN).

The shear force V_b shall be distributed over the height of the structure above the isolation interface in accordance with the following equations:

At the isolation base level, the force shall be

$$F_1 = V_b - V_{st} \tag{14-12}$$

For the superstructure above the isolation base level, the forces shall be

$$F_x = \frac{V_{st}w_x h_x^{k_{bi}}}{\sum_{i=1}^{n} w_i h_i^{k_{bi}}} \tag{14-13}$$

The inertia force distribution exponent shall be

$$k_{bi} = 14\beta_D T_S \le 4 \tag{14-14}$$

where V_{st} = Total lateral seismic design force or shear on elements above the isolation base level as prescribed by Eq. (14-11);

W_x = Portion of W that is located at or assigned to level i, n, or x, respectively;

h_x = Height above the isolation base level i, n, or x, respectively;

w_i = Portion of W that is located at or assigned to level i, n, or x, respectively;

h_i = Height above the isolation base level i, n, or x, respectively;

k_{bi} = Inertia force distribution exponent as prescribed by Eq. (14-14);

T_S = the period of the structure above the isolation system; and

β_D = Isolation system equivalent viscous damping at the displacement for the hazard level under consideration, determined separately for upper- and lower-bound properties.

At each level designated as x, the force F_i or F_x shall be applied over the area of the building in accordance with the weight, w_x, distribution at that level, h_x. Response of structural components and elements shall be calculated as the effect of the force F_x applied at the appropriate levels above the base.

C14.2.4.4.4 Vertical Distribution of Force In previous provisions, the vertical distribution included the weight of the slab level directly above the isolators when proportioning story forces. In this section, the vertical distribution of forces calculates the force at the base level immediately above the isolation plane then distributes the remainder of the base shear among the levels above based on York and Ryan (2008). The vertical distribution of forces is based on the effective damping and superstructure period and aligns more closely with distributions found by a nonlinear response history analysis of a representative set of isolated buildings.

14.2.4.5 Response Spectrum Analysis

14.2.4.5.1 Earthquake Input The BSE-1X spectrum shall be used to calculate the total design displacement of the isolation system and the seismic forces and displacements of the isolated building. The BSE-2X spectrum shall be used to calculate the total maximum displacement of the isolation system, unless an LPO is selected. The analyses shall be performed for both upper- and lower-bound isolator properties.

14.2.4.5.2 Modal Damping Response spectrum analysis shall be performed, using a damping value for isolated modes equal to the effective damping of the isolation system, or 30% of critical, whichever is less. The damping value assigned to higher modes of response shall be consistent with the value required for fixed-base analysis of the same structure. Separate modal damping ratios shall be computed for analyses performed using upper- and lower-bound isolator properties.

14.2.4.5.3 Combination of Earthquake Directions Response spectrum analysis used to determine the total design displacement and total maximum displacement shall include simultaneous excitation of the model by 100% of the most critical direction of ground motion, and not less than 30% of the ground motion in the orthogonal axis. The maximum displacement of the isolation system shall be calculated as the vector sum of the two orthogonal displacements.

14.2.4.5.4 Scaling of Results If the total design displacement determined by response spectrum analysis is found to be less than the value of D_{TD} prescribed by Eq. (14-8), or if the total maximum displacement determined by response spectrum analysis is found to be less than the value of D_{TM} prescribed by Eq. (14-9), then all response parameters, including component actions and deformations, shall be adjusted by the greater of the following:

1. D_{TD} / displacement determined by response spectrum analysis for BSE-1X, or
2. D_{TM} / displacement determined by response spectrum analysis for BSE-2X.

The shear at any story shall not be less than that resulting from the application of the story forces calculated using Section 14.2.4.4.4 and a value of V_s equal to the base shear obtained from the response spectrum analysis in the direction of interest.

14.2.4.6 Design Forces and Deformations Components and elements of the building shall be designed for forces and displacements estimated by linear procedures using the acceptance criteria of Section 7.5.2.2, using appropriate m-values as specified in Chapters 8 through 12. For all deformation-controlled actions, Eq. (7-36) is satisfied using an m-factor equal to the lesser of the following: those specified for the component at the selected Performance Level or 1.5 for the Immediate Occupancy or Life Safety Performance Levels and 2.0 for the Collapse Prevention Performance Level.

Components and elements shall be separately checked for the demands corresponding to analyses performed with upper- and lower-bound isolator properties.

14.2.5 Nonlinear Procedures Seismically isolated buildings evaluated using nonlinear procedures shall be represented by three-dimensional models that incorporate the nonlinear characteristics of both the isolation system and the structure above the isolation system.

14.2.5.1 Nonlinear Static Procedure

14.2.5.1.1 General The nonlinear static procedure (NSP) for seismically isolated buildings shall be based on the criteria of Section 7.4.3, except that the target displacement and pattern of applied seismic forces shall be based on the criteria given in Sections 14.2.5.1.2 and 14.2.5.1.3, respectively.

14.2.5.1.2 Target Displacement In each principal direction, the building model shall be pushed to the BSE-1X target displacement, D'_D, and to the BSE-2X target displacement, D'_M, as defined by Eqs. (14-15) and (14-16):

$$D'_D = \frac{D_D}{\sqrt{1+\left(\frac{T_e}{T_D}\right)^2}} \tag{14-15}$$

$$D'_M = \frac{D_M}{\sqrt{1+\left(\frac{T_e}{T_M}\right)^2}} \tag{14-16}$$

where T_e is the effective period of the structure above the isolation interface on a fixed base, as prescribed by Eq. (7-27). The target displacements, D'_D and D'_M, shall be evaluated at a control node that is located at the center of mass of the first floor above the isolation interface.

14.2.5.1.3 Seismic Force Pattern The pattern of applied seismic forces shall be as required by Section 14.2.4.4.4.

14.2.5.1.4 Design Forces and Deformations Components and elements of the building shall be designed for the forces and deformations estimated by nonlinear procedures and using the acceptance criteria of Section 7.5.3.2.

14.2.5.2 Nonlinear Dynamic Procedure

14.2.5.2.1 General The nonlinear dynamic procedure (NDP) for seismically isolated buildings shall be based on the nonlinear procedure requirements of Section 7.4.4, except that results shall be scaled for design based on the criteria given in the following section.

14.2.5.2.2 Scaling of Results If the design displacement determined by nonlinear response history analysis is less than 80% of the D'_D value prescribed by Eq. (14-15), or if the maximum displacement determined by response spectrum analysis is found to be less than 80% of the value of D'_M prescribed by Eq. (14-16), then all response parameters, including component actions and deformations, shall be adjusted by the greater of the following:

1. $0.80D'_D$ / displacement determined by time-history analysis for BSE-1X, or

Table C14-2. Analysis Cases for Evaluation of Effect of Accidental Eccentricity

Case	Isolator Properties	Accidental Eccentricity
I	Lower bound	No
IIa	Lower bound	Yes, *X* direction
IIb	Lower bound	Yes, *Y* direction

2. $0.80D'_M$ / displacement determined by time-history analysis for BSE-2X.

14.2.5.3 Torsion In lieu of performing analyses with mass shifted along each principal axis in turn to account for accidental eccentricity, it is permitted to establish amplification factors on forces, drifts, and deformations that allow results determined using a center-of-mass analysis to bound the results of all the mass-eccentric cases.

A mass eccentricity of not less than 2% is acceptable for use in all seismically isolated structures for which an NDP analysis is performed.

C14.2.5.3 Torsion To avoid the need to perform a large number of nonlinear response history analyses that include the suites of ground motion acceleration histories for both BSE-1X and BSE-2X events, the upper and lower isolator properties, and five or more locations of the center of mass, this change has been made so that the center of mass results can be scaled and used to account for the mass eccentricity in different quadrants.

The following procedure is one acceptable method of developing appropriate amplification factors for deformations and forces for use with center-of-mass NDP analyses, to account for the effects of accidental torsion. The use of other rationally based amplification factors is permitted.

The most critical directions for moving the calculated center of mass are such that the accidental eccentricity adds to the inherent eccentricity in each principal direction at each level. For each of these two eccentric mass cases, and with lower-bound isolator properties, the suite of nonlinear response history analyses should be run, and the results should be processed. The analysis cases are defined in Table C14-2.

The results from Cases IIa and IIb are then compared with those from Case I. The following amplification factors (ratio of Case IIa or IIb response to Case I response) are computed:

1. The amplification of story drift in the structure at the plan location with the highest drift, enveloped over all stories.
2. The amplification of frame-line shear forces at each story for the frame subjected to the maximum drift.

The larger of the two resulting scalars on drift should be used as the deformation amplifier, and the larger of the two resulting scalars on force should be used as the force amplifier. If both of these scalars are less than 1.1, the effects of accidental torsion need not be considered. If either scalar is greater than or equal to 1.1, the effects of accidental eccentricity should be considered as follows: NDP analyses for the inherent mass eccentricity case should be run, considering the variation of isolator properties. Response quantities should be computed per Section 7.2.3. For each isolator property variation, all deformation response quantities should be increased by the deformation amplifier and all force quantities should be increased by the force amplifier, before being used for evaluation or design.

14.2.5.4 Design Forces and Deformations Components and elements of the building shall be designed for the forces and deformations estimated by nonlinear procedures using the acceptance criteria of Section 7.5.3.2.

14.2.6 Nonstructural Components

14.2.6.1 General Permanent nonstructural components and the attachments to them shall be designed to resist seismic forces and displacements as given in this section and the applicable requirements of Chapter 13.

14.2.6.2 Forces and Displacements

14.2.6.2.1 Components and Elements at or Above the Isolation Interface Nonstructural components, or portions thereof, that are at or above the isolation interface shall be designed to resist a total lateral seismic force equal to the maximum dynamic response of the element or component under consideration.

EXCEPTION: Design of elements of seismically isolated structures and nonstructural components, or portions thereof, to resist the total lateral seismic force as required for conventional fixed-base buildings by Chapter 13 shall be permitted.

14.2.6.2.2 Components and Elements that Cross the Isolation Interface Nonstructural components, or portions thereof, that cross the isolation interface shall be designed to withstand the total maximum (horizontal) displacement and maximum vertical displacement of the isolation system at the total maximum (horizontal) displacement. Components and elements that cross the isolation interface shall not restrict displacement of the isolated building or otherwise compromise the Performance Objectives of the building.

14.2.6.2.3 Components and Elements Below the Isolation Interface Nonstructural components, or portions thereof, that are below the isolation interface shall be designed and constructed in accordance with the requirements of Chapter 13.

14.2.7 Detailed System Requirements The isolation system and the structural system shall comply with the detailed system requirements specified in Section 14.2.7.1, 14.2.7.2, and 14.2.7.3.

14.2.7.1 Design Review A review of the design of a structure with an isolation system and related test programs shall be performed by an independent engineer (or engineers) experienced in design and analysis of structures incorporating isolation systems, in accordance with the requirements of Section 1.5.10.

As a minimum, the following items shall be included in the design review:

1. Project design criteria;
2. Device selection;
3. Preliminary design, including the determination of the structure lateral displacements and the isolation system displacement and force demands;
4. Review of a prototype testing program to be conducted in accordance with Section 14.2.8.2, or of the basis for use of data from similar isolators;
5. Final design of the building, incorporating the isolation system and the supporting analyses; and
6. Review of the manufacturing quality control testing program.

C14.2.7.1 Design Review In the early applications of isolation, many design review panels included three individuals to cover the range of expertise required in the design review, including the site-specific seismic and other criteria and witnessing prototype testing of the devices. Design review may now be performed by just one individual. On more significant structures, a local jurisdiction may require a design review panel with two or three individuals, but for many structures incorporating an isolation system, one well qualified and experienced design reviewer is adequate.

Review of the seismic and other dynamic input is still required because this review should be a part of the project design criteria. Whereas review of the prototype test program is mandated, the design reviewer is no longer required to witness the prototype tests.

14.2.7.2 Isolation System

14.2.7.2.1 Environmental Conditions In addition to the requirements for vertical loads and lateral forces induced by wind and earthquake, the isolation system shall be designed with consideration given to other environmental conditions, including aging effects, creep, fatigue, operating temperature, and exposure to moisture or damaging substances. Design for isolator property variation is addressed in Section 14.2.2.1.3.

14.2.7.2.2 Wind Forces Isolated buildings shall resist design wind loads at all levels above the isolation interface in accordance with the applicable wind design provisions. At the isolation interface, a wind-restraint system shall be provided to limit lateral displacement in the isolation system to a value equal to that required between floors of the structure above the isolation interface.

14.2.7.2.3 Fire Resistance Fire resistance rating for the isolation system shall be consistent with the requirements of columns, walls, or other such components of the building.

14.2.7.2.4 Lateral Restoring Force The isolation system shall be configured to produce either a restoring force such that the seismic force at the total design displacement is at least $0.025W$ greater than the seismic force at 50% of the total design displacement, or a restoring force of not less than $0.05W$ at all displacements greater than 50% of the total design displacement.

EXCEPTION: The isolation system need not be configured to produce a restoring force, as required above, provided that the isolation system is capable of remaining stable under full vertical load and accommodating a total maximum displacement equal to the greater of either 3.0 times the total design displacement or $36S_{X1}$ in., where S_{X1} is calculated for the BSE-2X or where NDP is used.

14.2.7.2.5 Displacement Restraint Configuration of the isolation system to include a displacement restraint that limits lateral displacement caused by the BSE-2X to less than the ratio of the design spectral response acceleration parameter at 1 s (S_{X1}) for the BSE-2X to that for the design earthquake times the total design displacement shall be permitted, provided that the seismically isolated building is designed in accordance with the following criteria where they are more stringent than the requirements of Section 14.2.3:

1. BSE-2X response is calculated in accordance with the dynamic analysis requirements of Section 14.2.5, explicitly considering the nonlinear characteristics of the isolation system and the structure above the isolation system;
2. The ultimate capacity of the isolation system, and structural components and elements below the isolation system, shall exceed the force and displacement demands of the BSE-2X;
3. The structure above the isolation system is checked for stability and ductility demand of the BSE-2X; and
4. The displacement restraint does not become effective at a displacement less than 0.75 times the total design displacement, unless it is demonstrated by analysis that earlier engagement does not result in unsatisfactory performance.

14.2.7.2.6 Vertical Load Stability Each component of the isolation system shall be designed to be stable under the full maximum vertical load, $1.2Q_D + Q_L + |Q_E|$, and the minimum vertical load, $0.8Q_D - |Q_E|$, at a horizontal displacement equal to the total maximum displacement. The earthquake vertical force on an individual isolator unit, Q_E, shall be based on peak building response caused by the BSE-2X. The maximum vertical loads and maximum displacements may be the envelope of the upper- and lower-bound results, or the upper- and lower-bound results may be treated separately, in which case two vertical load stability tests shall be required.

14.2.7.2.7 Overturning The factor of safety against global structural overturning at the isolation interface shall be not less than 1.0 for required load combinations. All gravity and seismic loading conditions shall be investigated. Seismic forces for overturning calculations shall be based on the BSE-2X, and the vertical restoring force shall be based on the building's weight, W, above the isolation interface.

Local uplift of individual components and elements shall be permitted, provided that the resulting deflections do not cause overstress or instability of the isolator units or other building components and elements. A tie-down system to limit local uplift of individual components and elements shall be permitted, provided that the seismically isolated building is designed in accordance with the following criteria where they are more stringent than the requirements of Section 14.2.3:

1. BSE-2X response is calculated in accordance with the dynamic analysis requirements of Section 14.2.5, explicitly considering the nonlinear characteristics of the isolation system and the structure above the isolation system;
2. The ultimate capacity of the tie-down system exceeds the force and displacement demands of the BSE-2X; and
3. The isolation system is designed and shown by test to be stable per Section 14.2.8.2.4 for BSE-2X loads that include additional vertical load because of the tie-down system.

C14.2.7.2.7 Overturning As noted in Section 14.2.4.3, whenever a Limited Performance Objective is selected, the displacement design requirements for the devices are 200% of the BSE-1X values.

For example, if the selected performance objective is Immediate Occupancy in the BSE-1X earthquake, then the isolation system must accommodate 200% of the BSE-1X displacement demands ($2D_{TD}$). Similar requirements have not been defined for isolator axial load and uplift displacement demands because a simple scalar could not be readily established.

If the registered design professional believes that axial loads and/or uplift displacements may be significantly higher at the BSE-2X than those observed at the BSE-1X, then it is recommended that the BSE-2X system performance be investigated to characterize and design for these demands.

14.2.7.2.8 Inspection and Replacement Access for inspection and replacement of all components and elements of the isolation system shall be provided.

14.2.7.2.9 Manufacturing Quality Control A manufacturing quality control testing program for isolator units shall be established by the registered design professional. At a minimum, this testing program shall confirm the adequacy of isolator component material properties and evaluate the acceptability of results from a specified sample of tested isolator units. The test results shall be verified to fall within the acceptable range described in the project specifications. These limits shall be the same as the

specification tolerances on nominal design properties established in Section 14.2.2.1.2.

C14.2.7.2.9 Manufacturing Quality Control The registered design professional must define in the project specifications the scope of the manufacturing quality control test program, as well as allowable variations in the measured properties of the production isolation units. Typically, 100% of the isolators of a given size are tested in combined compression and shear, and the allowable variation of the mean test result shall be within the specified tolerance of Section 14.2.2.1.2 (typically ±10% or ±15% from the nominal design properties). Individual isolators may be permitted a wider variation (±15% or ±20%) when all isolators of a given size are tested. If less than 100% of the isolators of a given size are tested, then each isolator shall meet the specified tolerance of Section 14.2.2.1.2.

For example, the mean of the effective stiffness for all tested isolators might be permitted to vary no more than ±10% from the specified value, but the effective stiffness for any individual isolator may be permitted to vary no more than ±15% from the specified value. The registered design professional must decide on the acceptable range of variation of isolator properties on a project-by-project basis.

Another aspect of the quality control test program that must be established by the registered design professional is the number of production isolation units that must be tested. This number can range from a small sample (recommended to be at least 20%) of the total number of isolation units produced to 100% of the isolator produced. Typical practice has been to perform quality control testing on all isolators, but there is no codified requirement to do so. Factors that may figure into a decision on the proportion of production isolators to test include the complexity of the isolator or test, expected variations in material properties, and the experience of the manufacturer in producing the specified type and size of isolator.

The most important class of testing to be performed in a quality control program is combined compression and shear testing. This test reveals the most relevant characteristics of the completed isolator and permits the designer to verify that the production isolators provide load-deflection behavior that is consistent with the structural design assumptions. Although vertical load-deflection tests have historically been specified in quality control testing programs, these test data are typically of limited value. Consideration should be given to the overall cost and schedule effects of performing multiple types of quality control tests, and only those tests that are directly relevant to verifying the design properties of the isolators should be specified.

The quality control program should also include testing of isolator component materials in a similar fashion to other construction materials for the project. The objective of this material testing is to ensure consistency throughout the entire run of production isolators for the project with a previously tested prototype isolator. The registered design professional should coordinate with the isolator manufacturer to establish the details of the material testing program.

14.2.7.3 Structural System

14.2.7.3.1 Horizontal Distribution of Force A horizontal diaphragm or other structural components and elements shall provide continuity above the isolation interface. The diaphragm or other structural components and elements shall have adequate strength and ductility to transmit forces (because of nonuniform ground motion) calculated in accordance with this section from one part of the building to another and shall have sufficient stiffness to effect rigid diaphragm response above the isolation interface.

14.2.7.3.2 Building Separations Separations between the isolated building and surrounding retaining walls or other fixed obstructions shall be not less than the total maximum displacement or 200% of the total design displacement if a Limited Performance Objective has been selected.

14.2.8 Isolation System Testing and Design Properties

14.2.8.1 General The deformation characteristics and damping values of the isolation system used in the design and analysis of seismically isolated structures shall be based on the following tests of prototype samples of the isolator devices before construction.

The isolation system components to be tested shall include isolators, components of the wind-restraint system, and supplemental energy dissipation devices, if such components and devices are used in the design.

The tests specified in this section establish nominal design properties of the isolation system and shall not be considered as satisfying the manufacturing quality control testing requirements of Section 14.2.7.2.9.

14.2.8.2 Prototype Tests

14.2.8.2.1 General Prototype tests shall be performed separately on two full-sized specimens of each type and size of isolator of the isolation system. The test specimens shall include components of the wind-restraint system, as well as individual isolators, if such components are used in the design. Supplemental energy dissipation devices shall be tested in accordance with Section 14.3.8. Specimens tested shall not be used for construction unless approved by the registered design professional responsible for the structural design.

14.2.8.2.2 Record For each cycle of tests, the force-deflection and hysteretic behavior of the test specimen shall be recorded.

14.2.8.2.3 Sequence and Cycles The following sequence of tests shall be performed for the prescribed number of cycles at a vertical load equal to the average $Q_D + 0.5Q_L$ on all isolators of a common type and size:

1. Twenty fully reversed cycles of loading at a lateral force corresponding to the wind design force;
2. Three fully reversed cycles of loading at each of the following displacements: $0.25D_D$, $0.50D_D$, $1.0D_D$, from the BSE-1X level and $1.0D_M$; from the BSE-2X level;
3. Three fully reversed cycles at the total maximum displacement, $1.0D_{TM}$; from the BSE-2X level; and
4. $30S_{X1} / (S_{XS}B_{D1})$, but not less than 10, fully reversed cycles of loading at the design displacement, $1.0D_D$. S_{X1} and S_{XS} shall be evaluated for the BSE-1X level.

14.2.8.2.4 Vertical Load-Carrying Isolators If an isolator is also a vertical-load-carrying component, then Item 2 of the sequence of cyclic tests specified in Section 14.2.8.2.3 shall be performed for two additional vertical load cases:

1. $1.2Q_D + 0.5Q_L + |Q_E|$; and
2. $0.8Q_D - |Q_E|$

where D, L, and E refer to dead, live, and earthquake loads, respectively. Q_D and Q_L are as defined in Section 7.2.2. The vertical test load on an individual isolator unit shall include the load increment Q_E caused by earthquake overturning and shall be equal to or greater than the peak earthquake vertical force response corresponding to the test displacement being evaluated.

In these tests, the combined vertical load shall be taken as the typical or average downward force on all isolators of a common type and size.

The maximum vertical loads and maximum displacements shall be the envelope of those determined from separate analyses using upper- and lower-bound isolator properties. Alternatively, it is acceptable to perform multiple tests for the combinations of vertical load and horizontal displacement obtained from the upper- and lower-bound isolator property analyses.

14.2.8.2.5 Isolators Dependent on Loading Rates If the force-deflection properties of the isolators are dependent on the rate of loading, then each set of tests specified in Sections 14.2.8.2.3 and 14.2.8.2.4 shall be performed dynamically at a frequency equal to the inverse of the effective period, T_D, of the isolated structure. Alternatively, lambda (λ) factors for velocity effects may be established using data from testing of similar isolators in accordance with Section 14.2.2.1.3.

EXCEPTION: If reduced-scale prototype specimens are used to quantify rate-dependent properties of isolators, the reduced-scale prototype specimens shall be of the same type and material and shall be manufactured with the same processes and quality as the full-scale prototypes; they shall also be tested at a frequency that represents full-scale prototype loading rates.

The force-deflection properties of an isolator shall be considered to be dependent on the rate of loading if there is greater than a ±10% difference in the effective stiffness at the design displacement (1) where tested at a frequency equal to the inverse of the effective period of the isolated structure, and (2) where tested at any frequency in the range of 0.1 to 2.0 times the inverse of the effective period of the isolated structure.

14.2.8.2.6 Isolators Dependent on Bilateral Load If the force-deflection properties of the isolators are dependent on bilateral load, then the tests specified in Sections 14.2.8.2.3 and 14.2.8.2.4 shall be augmented to include bilateral load at the following increments of the total design displacement: 0.25 and 1.0, 0.50 and 1.0, 0.75 and 1.0, and 1.0 and 1.0. Alternatively, lambda (λ) factors for bilateral effects may be established using data from testing of similar isolators in accordance with Section 14.2.2.1.3.

EXCEPTION: If reduced-scale prototype specimens are used to quantify bilateral-load-dependent properties, then such scaled specimens shall be of the same type and material and shall be manufactured with the same processes and quality as full-scale prototypes.

The force-deflection properties of an isolator shall be considered to be dependent on bilateral load if the bilateral and unilateral force-deflection properties have greater than a ±15% difference in effective stiffness at the design displacement.

14.2.8.2.7 Maximum and Minimum Vertical Load Isolators that carry vertical load shall be statically tested for the maximum and minimum vertical load at the total maximum displacement. In these tests, the combined vertical loads of $1.2Q_D + 1.0Q_L + |Q_E|$ shall be taken as the maximum vertical force, and the combined vertical load of $0.8Q_D - |Q_E|$ shall be taken as the minimum vertical force on any one isolator of a common type and size. The earthquake vertical load on an individual isolator, Q_E, shall be based on peak building response caused by the BSE-2X.

The maximum vertical loads and maximum displacements shall be the envelope of those determined from separate analyses using upper- and lower-bound isolator properties. Alternatively, it is acceptable to perform multiple tests for the combinations of vertical load and horizontal displacement obtained from the upper- and lower-bound isolator property analyses.

14.2.8.2.8 Sacrificial Wind-Restraint Systems If a sacrificial wind-restraint system is part of the isolation system, then the ultimate capacity shall be established by testing in accordance with this section.

14.2.8.2.9 Testing Similar Units Prototype tests need not be performed if an isolator unit, where compared with another tested unit, complies with the following criteria:

1. It is of similar dimensional characteristics;
2. It is of the same type and materials; and
3. It is fabricated using identical manufacturing and quality control procedures.

The testing exemption shall be approved by the independent design reviewer specified in Section 14.2.7.1.

C14.2.8.2.9 Testing Similar Units Suggested limits for dimensional similarity are ±20% for overall dimensions and key characteristic dimensions. The previously tested unit should have been subjected to test forces and displacements that result in at least the same or more severe demand than anticipated for the project prototype isolators.

14.2.8.3 Determination of Force-Deflection Characteristics The force-deflection characteristics of the isolation system shall be based on the cyclic load testing of isolator prototypes specified in Section 14.2.8.2.3.

As required, the effective stiffness of an isolator unit, k_{eff}, shall be calculated for each cycle of deformation by Eq. (14-17):

$$k_{\text{eff}} = \frac{|F^+| + |F^-|}{|\Delta^+| + |\Delta^-|} \tag{14-17}$$

where F^+ and F^- are the positive and negative forces at positive and negative test displacements, Δ^+ and Δ^-, respectively.

As required, the effective damping of an isolator unit, β_{eff}, shall be calculated for each cycle of deformation by Eq. (14-18):

$$\beta_{\text{eff}} = \frac{2}{\pi}\left(\frac{E_{\text{Loop}}}{k_{\text{eff}}\left(|\Delta^+| + |\Delta^-|\right)^2}\right) \tag{14-18}$$

where the energy dissipated per cycle of loading, E_{loop}, and the effective stiffness, k_{eff}, are based on test displacements, Δ^+ and Δ^-.

14.2.8.4 System Adequacy The performance of the test specimens shall be assessed as adequate if the following conditions are satisfied:

1. The force-deflection plots of all tests specified in Section 14.2.8.2 have a nonnegative incremental force-carrying capacity.
2. For each increment of test displacement specified in Section 14.2.8.2.3, Item 2, and for each vertical load case specified in Section 14.2.8.2.4, the following criteria are met:
   2.1. There is no greater than a ±15% difference between the effective stiffness at each of the three cycles of test and the average value of effective stiffness for each test specimen; and
   2.2. There is no greater than a 15% difference in the average value of effective stiffness of the two test specimens of a common type and size of the isolator unit over the required three cycles of test.
3. For each specimen there is no greater than a ±20% change in the initial effective stiffness of each test specimen over

the $30S_{X1}$ / $S_{XS}B_{D1}$, but not less than 10, cycles of the test specified in Section 14.2.8.2.3, Item 3. S_{X1} and S_{XS} shall be evaluated for the BSE-1X event.

4. For each specimen, there is no greater than a 20% decrease in the initial effective damping over the $30S_{X1}/S_{XS}B_{D1}$, but not less than 10, cycles of the test specified in Section 14.2.8.2.3, Item 4. S_{X1} and S_{XS} shall be evaluated for the BSE-1X event.
5. All specimens of vertical-load-carrying components of the isolation system remain stable at the total maximum displacement for static load as prescribed in Section 14.2.8.2.4.
6. The effective stiffness and effective damping of test specimens fall within the limits specified by the registered design professional as described by the lambda factors (λ) in Section 14.2.2.1.2.

14.2.8.5 Nominal Properties of the Isolation System

14.2.8.5.1 Isolator Effective Stiffness The nominal effective stiffness of the isolation system shall be based on the average properties from the three-cycle tests of Section 14.2.8.2 at each displacement level. If isolator properties are dependent on axial load, they may be averaged across the three test axial loads. Lambda factors shall be established, as appropriate, to account for variations from the nominal average properties for use in Section 14.2.2.1.3.

The forces corresponding to these effective stiffnesses shall be used to establish a nominal backbone curve for each isolator type for use in the NSP.

The ratio of the maximum and minimum isolator effective stiffness over each cycle to the average over three cycles shall be used to establish λ_{cyclic} factors as required in Section 14.2.2.1.3.

$$K_D = \frac{\Sigma\left|F_D^+\right| + \Sigma\left|F_D^-\right|}{2D_D} \tag{14-19}$$

$$K_M = \frac{\Sigma\left|F_M^+\right| + \Sigma\left|F_M^-\right|}{2D_M} \tag{14-20}$$

C14.2.8.5.1 Isolator Effective Stiffness These testing provisions imply that lambda factors for cyclic variation can be established using the results of the three cycle tests specified in Section 14.2.8.2.3. As an alternative to the use of lambda factors, cyclic variation of isolator properties may be captured directly in the analysis.

If the registered design professional believes that the isolation system may be subjected to a long duration of shaking, it may be appropriate to consider property variation over a larger number of cycles.

14.2.8.5.2 Effective Damping At both the BSE-1X and BSE-2X displacements, the nominal effective damping of the isolation system, β, shall be based on the cyclic tests of Section 14.2.8.2 and shall be calculated by Eqs. (14-21) and (14-22):

$$\beta_D = \frac{1}{2\pi}\left(\frac{\Sigma E_D}{K_D D_D^2}\right) \tag{14-21}$$

$$\beta_M = \frac{1}{2\pi}\left(\frac{\Sigma E_M}{K_M D_M^2}\right) \tag{14-22}$$

In Eqs. (14-21) and (14-22), the total energy dissipated in the isolation system per displacement cycle, ΣE, shall be taken as the sum of the average energy dissipated per cycle in all isolators measured at test displacements, Δ^+ and Δ^-, that are three cycle tests equal in magnitude to the design displacement under consideration for the BSE-1X and BSE-2X event. Lambda factors shall be developed to account for variations from the nominal average properties.

14.2.8.5.3 Isolator Nominal Design Properties for Analysis When nonlinear analysis is used, similar methods to those described above shall be used to compute the relevant modeling parameters for each isolator type, such as isolator initial and postyield stiffness and isolator strength. The selected modeling parameters shall result in reasonable agreement between the shape of the nominal and test hysteresis loop for each isolator type. The selected modeling parameters shall be applicable over the expected range of displacements, or separate properties shall be developed in accordance with Sections 14.2.2.1.3 and 14.2.2.1.4. The isolation system effective stiffness and damping shall be developed separately corresponding to upper- and lower-bound isolator modeling parameters.

14.3 PASSIVE ENERGY DISSIPATION SYSTEMS

14.3.1 General Requirements Passive energy dissipation systems classified as displacement dependent, velocity dependent, or other, as defined in Section 14.3.3, shall comply with the requirements of Section 14.3. Linear and nonlinear analyses shall be performed, as required, in accordance with Section 14.3.4 and 14.3.5, respectively. Additional requirements for passive energy dissipation systems, as defined in Section 14.3.6, shall be met. Passive energy dissipation systems shall be reviewed and tested in accordance with Sections 14.3.7 and 14.3.8, respectively.

The energy dissipation devices shall be designed with consideration given to environmental conditions, including wind, aging effects, creep, fatigue, ambient temperature, operating temperature, and exposure to moisture or damaging substances.

For voluntary seismic upgrades, a Limited Performance Objective (LPO) of Life Safety at BSE-1X is permitted. However, the damping devices shall have reserve capacity beyond the BSE-1X demands. If an LPO is adopted, each story shall have at least four energy dissipation devices in each principal direction of the building, with at least two devices located on each side of the center of stiffness of the story in the direction under consideration.

The mathematical model of the building shall include the plan and vertical distribution of the energy dissipation devices. Analyses shall account for the dependence of the devices on excitation frequency, ambient and operating temperature, velocity, sustained loads, and bilateral loads. Multiple analyses of the building shall be conducted to bound the effects of the varying mechanical characteristics of the devices.

Energy dissipation devices shall be capable of sustaining larger displacements and forces for displacement-dependent devices and larger displacements, velocities, and forces for velocity-dependent devices than the maximum calculated for the BSE-2X or BSE-1X for an LPO in accordance with the following criteria:

1. If four or more energy dissipation devices are provided in a given story of a building in one principal direction of the building, with a minimum of two devices located on each side of the center of stiffness of the story in the direction under consideration, all energy dissipation devices shall be capable of sustaining displacements equal to 130% of the maximum calculated displacement in the device in the BSE-2X or 200% of the maximum calculated displacement in the device at BSE-1X for an LPO. A velocity-dependent device, as described in Section 14.3.3, shall be capable of sustaining the force and displacement associated with a

velocity equal to 130% of the maximum calculated velocity for that device in the BSE-2X or the force and displacement associated with 200% of the maximum calculated velocity for that device at BSE-1X for an LPO.

2. If fewer than four energy dissipation devices are provided in a given story of a building in one principal direction of the building, or fewer than two devices are located on each side of the center of stiffness of the story in the direction under consideration, all energy dissipation devices shall be capable of sustaining displacements equal to 200% of the maximum calculated displacement in the device in the BSE-2X. A velocity-dependent device shall be capable of sustaining the force and displacement associated with a velocity equal to 200% of the maximum calculated velocity for that device in the BSE-2X.

The components and connections transferring forces between the energy dissipation devices shall be designed to remain linearly elastic for the forces described in Items 1 or 2 above.

C14.3.1 General Requirements The increase in displacement and velocity capacity is dependent on the level of redundancy in the supplemental damping system.

Research has shown that including a factor of 130% over the values computed calculated by analysis at BSE-2X can provide a greater margin of safety at large earthquakes. Accordingly, this standard requires that energy dissipation devices be capable of sustaining larger displacements (and velocities for velocity-dependent devices) than the maxima calculated by analysis in the BSE-2X. The response of a building frame incorporating four or more devices in each principal direction in each story is more reliable than a frame with fewer devices in each principal direction, because the increase in displacement and velocity capacity is dependent on the level of redundancy in the supplemental damping system. The increased force due to the additional displacement and velocity capacity in the devices shall be used to design the framing that supports the energy dissipation devices.

14.3.2 Implementation of Energy Dissipation Devices Energy dissipation devices shall be implemented in accordance with requirements specified in Chapters 1 through 7 but as modified in the subsequent sections of this chapter.

14.3.2.1 Nominal Design Properties Nominal design properties of energy dissipation devices shall be established from either project-specific prototype test data or prior prototype tests on a device of similar size and construction. These nominal design properties shall be modified by lambda factors per Sections 14.3.2.2 and 14.3.2.3 to account for (a) manufacturing tolerances, (b) device characteristics not explicitly accounted for during testing, (c) long-term environmental effects, and (d) aging, to develop upper- and lower-bound properties for the design and analysis of the energy dissipated structure, as specified in Section 14.3.2.4.

C14.3.2.1 Nominal Design Properties In the early applications of energy dissipation technology, the design properties were obtained from prototype tests, which could lead to an extended design process. As the number of applications has increased, the prototype test data that are available from manufacturers of the more widely used devices have increased significantly, and it is now possible to get reasonably accurate nominal design properties from the manufacturers. These nominal design properties can be confirmed by prototype tests later in the design or construction phase of the project. The use of a bounded analysis enables the design process for structures with energy dissipation devices to proceed similar to that for a conventional project.

14.3.2.2 Specification Tolerance on Nominal Design Properties A lambda factor shall be established ($\lambda_{spec,upper}$ and $\lambda_{spec,lower}$) for the permissible variation on the average of the manufacturing production test values from the nominal design value for a given device. This tolerance shall be the same as that used for the procurement of a device for construction, and it is also used to establish the upper- and lower-bound properties in Section 14.3.2.4 for the design and analysis of the structure incorporating energy dissipation devices.

C14.3.2.2 Specification Tolerance on Nominal Design Properties It is important to recognize that there are variations in the nominal properties of damping devices because of manufacturing. This section specifies the lambda factors for the manufacturing process, and these are then used with the property variation factors in Section 14.3.2.3 to determine the upper- and lower-bound properties of the devices in Section 14.3.2.4 for use in the design and analysis process.

Recommended values for the specification tolerance on the average properties of all devices of a given size isolator are typically in the ±10% to ±15% range. For a ±10% specification tolerance, the corresponding lambda factors would be $\lambda_{spec,upper} = 1.10$ and $\lambda_{spec,lower} = 0.90$. Variations in individual device properties are typically greater than the tolerance on the average properties of all devices of a given size, as discussed in Section 14.3.6.4. It is recommended that the device manufacturer should be consulted when establishing these tolerance values.

14.3.2.3 Property Variation (λ) Factors Property variation or lambda (λ) factors shall be established for each device type to account for device characteristics not explicitly included in the nominal design values derived from testing, long-term environmental effects, and aging. Lambda (λ) factors for each effect shall be established that describe the expected variation above and below the nominal value (1.0) and shall be designated $\lambda_{effect,upper}$ and $\lambda_{effect,lower}$.

Upper-bound property modification $\lambda_{PM,upper}$ factors shall be determined for each device type by multiplying together all of the upper-bound $\lambda_{effect,upper}$ factors for device characteristics, environmental effects, and aging effects to get $\lambda_{PM,upper}$, and similarly multiplying together all lower-bound $\lambda_{effect,lower}$ factors to get $\lambda_{PM,lower}$.

The system property adjustment factor (SPAF) used to modify the λ_{PM} values in Section 14.3.2.4 is 0.67 for all Performance Levels.

C14.3.2.3 Property Variation (λ) Factors The devices are to be designed with consideration given to (a) device characteristics that result in behavior differing from the nominal design properties, for example, first-cycle effects, creep, and fatigue; (b) environmental conditions, including ambient temperature, moisture, and other damaging substances; and (c) aging effects. This section provides the lambda factor methodology for addressing these potential variations in device properties from the nominal design properties. These variations are then included in the upper- and lower-bound device properties in Section 14.3.2.4.

The system property adjustment factor (SPAF) was designed to recognize that a full and simultaneous increase in each parameter is unlikely to occur at the same time. The value is based on the judgment of the committee, but it is consistent with the AASHTO value for essential bridges.

14.3.2.4 Upper- and Lower-Bound Design and Analysis Properties Upper- and lower-bound design and analysis properties for each device shall be determined for each modeling parameter as follows:

$$\text{Upper-bound design property} = \text{Nominal design property} \times \lambda_{\text{spec,upper}}\left[1+\text{SPAF}\left(\lambda_{\text{PM,upper}}-1\right)\right] \quad (14\text{-}23a)$$

$$\text{Upper-bound design property} > 1.15 \times \text{Nominal design property} \quad (14\text{-}23b)$$

$$\text{Lower-bound design property} = \text{Nominal design property} \times \lambda_{\text{spec,lower}}\left[1-\text{SPAF}\left(1-\lambda_{\text{PM,lower}}\right)\right] \quad (14\text{-}24a)$$

$$\text{Lower-bound design property} < 0.85 \times \text{Nominal design property} \quad (14\text{-}24b)$$

Upper-bound device characteristics shall be considered together as the upper-bound design and analysis case, and lower-bound device characteristics shall be considered together as the lower-bound design and analysis case. At a minimum, upper- and lower-bound properties shall be established for loads and displacements and velocities corresponding to each hazard level being evaluated.

C14.3.2.4 Upper- and Lower-Bound Design and Analysis Properties This section provides the methodology for combining both the specification tolerances and property modification factors caused by device characteristics, environment, and aging effects to obtain upper- and lower-bound design and analysis properties for each device size.

The authors recognize that much of the data needed to rationally develop the required individual factors for energy dissipation devices do not exist at the time of writing. However, Sections 14.3.2.3 and 14.3.2.4 define the sources of variation that should be considered and a rational methodology for combining variation from multiple sources.

At the time of writing, typical practice for fluid viscous and fluid viscoelastic piston devices, characterized by $F = Cv^{\alpha}$ and sourced from manufacturers, is to use upper-bound design property = (1.15 to 1.20) × nominal design property and lower-bound design property = (0.80 to 0.85) × nominal design property to cover variations caused by specification, device characteristics, environment, and aging. The variation is typically applied only to the C value and not to the α value. Other types of devices may have different governing equations and may require larger variation factors.

14.3.3 Modeling of Energy Dissipation Devices Displacement-dependent devices shall include devices that exhibit either rigid plastic (friction devices), bilinear (metallic yielding devices), or trilinear hysteresis. The response of displacement-dependent devices shall be independent of velocity and frequency of excitation. Velocity-dependent devices shall include solid and fluid viscoelastic devices and fluid viscous devices. Devices not classified as displacement or velocity dependent shall be classified as "other."

Models of the energy dissipation system shall include the flexibility of structural components that are part of the load path between energy dissipation devices and the ground or between the device and the structure. These structural components, whose flexibility affects the performance of the energy dissipation system, include components of the foundation, braces that work in series with the energy dissipation devices, and connections between braces and the energy dissipation devices.

Energy dissipation devices shall be modeled as described in the following subsections, unless other methods approved by the authority having jurisdiction are used.

C14.3.3 Modeling of Energy Dissipation Devices Examples of "other" devices include shape-memory alloys (superelastic effect); friction-spring assemblies with recentering capability; and fluid-restoring, force-damping devices.

14.3.3.1 Displacement-Dependent Devices A displacement-dependent device shall have a force–displacement relationship that is a function of the relative displacement between each end of the device. The response of a displacement-dependent device shall be independent of the relative velocity between each end of the device and frequency of excitation.

Displacement-dependent devices shall be modeled in sufficient detail to capture their force–displacement response and their dependence, if any, on axial–shear–flexure interaction or bilateral deformation response.

For evaluating the response of a displacement-dependent device from testing data, the force, F, in a displacement-dependent device shall be calculated in accordance with Eq. (14-25):

$$F = k_{\text{eff}} D \quad (14\text{-}25)$$

where k_{eff}, = the effective stiffness of the device calculated in accordance with Eq. (14-26);
D = the relative displacement between two ends of the energy dissipation device.

$$k_{\text{eff}} = \frac{\left|F^{+}\right|+\left|F^{-}\right|}{\left|D^{+}\right|+\left|D^{-}\right|} \quad (14\text{-}26)$$

The forces in the device, F^{+} and F^{-}, shall be evaluated at displacements D^{+} and D^{-}, respectively.

14.3.3.2 Velocity-Dependent Devices

14.3.3.2.1 Solid Viscoelastic Devices Solid viscoelastic devices shall be modeled using a spring and dashpot in parallel (Kelvin model). The spring and dashpot constants selected shall capture the frequency and temperature dependence of the device consistent with fundamental frequency of the building (f_1) and the operating temperature range. If the cyclic response of a solid viscoelastic device cannot be captured by single estimates of the spring and dashpot constants, the response of the building shall be estimated by multiple analyses of the building frame, using limiting upper- and lower-bound values for the spring and dashpot constants.

The force in a solid viscoelastic device shall be determined in accordance with Eq. (14-27):

$$F = k_{\text{eff}} D + C\dot{D} \quad (14\text{-}27)$$

where C = the damping coefficient for the solid viscoelastic device;
D = the relative displacement between each end of the device;
$\dot{D}$ = the relative velocity between each end of the device; and
k_{eff} = the effective stiffness of the device calculated in accordance with Eq. (14-28).

$$k_{\text{eff}} = \frac{\left|F^{+}\right|+\left|F^{-}\right|}{\left|D^{+}\right|+\left|D^{-}\right|} = K' \quad (14\text{-}28)$$

where K' = the storage stiffness.

The damping coefficient, C, for the device shall be calculated in accordance with Eq. (14-29):

$$C = \frac{W_D}{\pi\omega_1 D_{\text{ave}}^2} = \frac{K''}{\omega_1} \quad (14\text{-}29)$$

where K'' = the loss stiffness;
ω_1 = the angular frequency equal to $2\pi f_1$;
$f_1 = 1/T$;
D_{ave} = the average of the absolute values of displacements D^+ and D^- equal to $(|D^+| + |D^-|)/2$; and W_D = the area enclosed by one complete cycle of the force–displacement response of the device.

C14.3.3.2.1 Solid Viscoelastic Devices The cyclic response of viscoelastic solids is generally dependent on the frequency and amplitude of the motion and the operating temperature (including temperature rise caused by excitation).

14.3.3.2.2 Fluid Viscoelastic Devices Fluid viscoelastic devices shall be modeled using a combination of springs and dashpot in series and parallel to represent the constitutive relation of the device. The spring and dashpot constants selected shall capture the frequency and temperature dependence of the device consistent with fundamental frequency of the building (f_1) and the operating temperature range. If the cyclic response of a fluid viscoelastic device cannot be captured by single estimates of the spring and dashpot constants, the response of the building shall be estimated by multiple analyses of the building frame, using limiting upper- and lower-bound values for the spring and dashpot constants.

C14.3.3.2.2 Fluid Viscoelastic Devices The cyclic response of fluid viscoelastic devices is generally dependent on the frequency and amplitude of the motion and the operating temperature (including temperature rise caused by excitation).

14.3.3.2.3 Fluid Viscous Devices Linear fluid viscous dampers exhibiting stiffness in the frequency range $0.5f_1$ to $2.0f_1$ shall be modeled as fluid viscoelastic devices.

In the absence of stiffness in the frequency range $0.5f_1$ to $2.0f_1$, the force in the fluid viscous device shall be computed in accordance with Eq. (14-30):

$$F = C_0 \left|\dot{D}\right|^{\alpha} \quad \mathrm{sgn}\left(\dot{D}\right) \tag{14-30}$$

where C_0 = the damping coefficient for the device;
α = the velocity exponent for the device;
$\dot{D}$ = the relative velocity between each end of the device; and
sgn is the signum function that, in this case, defines the sign of the relative velocity term.

14.3.3.3 Other Types of Devices Energy dissipation devices not classified as either displacement dependent or velocity dependent shall be modeled using methods approved by the authority having jurisdiction. Such models shall accurately describe the force–velocity–displacement response of the device under all sources of loading, including gravity, seismic, environmental, and thermal.

C14.3.3.3 Other Types of Devices Other energy dissipating devices, such as those having hysteresis of the type shown in Fig. C14-8, require modeling techniques different from those described above. Nims et al. (1993), Tsopelas and Constantinou (1994), and Pekcan et al. (1995) describe analytical models for some of these devices.

14.3.4 Linear Analysis Procedures The use of analysis methods listed in this section is restricted to cases where the energy dissipation devices are present in all stories of the upgraded building. All analyses shall be performed for the upper- and lower-bound properties specified in Section 14.3.2.4.

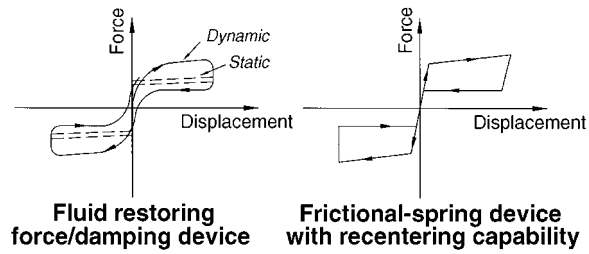

FIG. C14-8. Idealized Force–Displacement Loops of Energy Dissipation Devices with Recentering Capability

Linear procedures shall be permitted only if all the following criteria are met:

1. The framing system exclusive of the energy dissipation devices remains essentially elastic for the selected Seismic Hazard Level after the effects of added damping are considered;
2. The effective damping afforded by the energy dissipation does not exceed 30% of critical in the fundamental mode;
3. The secant stiffness of each energy dissipation device, calculated at the maximum displacement in the device, is included in the mathematical model of the rehabilitated building; and
4. Where evaluating the regularity of a building, the energy dissipation devices are included in the mathematical model.

C14.3.4 Linear Analysis Procedures For buildings that have dampers in all stories, procedures other than NDP have been shown to provide a reasonable estimate of the global performance of the building. However, the studies conducted to date have been limited in scope and have focused on the cases where dampers have been provided in all stories. Because damping devices introduce concentrated damping at their point of attachment, the authors of the standard recognize that such damping cannot be represented by a global damping ratio. As such, when dampers are not present in all stories, use of procedures other than NDP analysis can lead to inaccuracies in calculating the demand on structural members.

14.3.4.1 Linear Static Procedure

14.3.4.1.1 Displacement-Dependent Devices Use of the linear static procedure (LSP) shall be permitted to analyze displacement-dependent energy dissipation devices, provided that, in addition to the requirements of Section 14.3.4, the following requirements are satisfied:

1. The ratio of the maximum resistance in each story, in the direction under consideration, to the story shear demand calculated using Eqs. (7-24) and (7-25), shall range between 80% and 120% of the average value of the ratio for all stories. The maximum story resistance shall include the contributions from all components, elements, and energy dissipation devices; and
2. The maximum resistance of all energy dissipation devices in a story, in the direction under consideration, shall not exceed 50% of the resistance of the remainder of the framing where said resistance is calculated at the displacements anticipated in the BSE-2X or BSE-1X for an LPO. Aging and environmental effects shall be considered in calculating the maximum resistance of the energy dissipation devices

The pseudo seismic force of Eq. (7-21) shall be calculated with an S_a reduced by the damping modification factor, B_1, in

Section 2.4.1.7.1 to account for the energy dissipation (damping) afforded by the energy dissipation devices. The damping modification factor, B_1, shall be calculated based on an effective damping ratio, β_{eff} calculated in accordance with Eq. (14-31):

$$\beta_{\text{eff}} = \beta + \frac{\sum_j W_j}{4\pi W_k} \tag{14-31}$$

where β = the damping in the framing system and shall be set equal to 0.02 unless modified in Section 7.2.3.6;
W_j shall be taken as the work done by device j in one complete cycle corresponding to floor displacements δ_i, the summation extends over all devices j; and
W_k is the maximum strain energy in the frame, determined using Eq. (14-32):

$$W_k = \frac{1}{2}\sum_i F_i \delta_i \tag{14-32}$$

where F_i shall be taken as the inertia force at floor level i and the summation extends over all floor levels.

14.3.4.1.2 Velocity-Dependent Devices Use of the LSP shall be permitted to analyze velocity-dependent energy dissipation devices, provided that in addition to the requirements of Section 14.3.4, the following requirements are satisfied:

1. The maximum resistance of all energy dissipation devices in a story in the direction under consideration shall not exceed 50% of the resistance of the remainder of the framing where said resistance is calculated at the displacements anticipated in the BSE-2X or BSE-1X for an LPO. Aging and environmental effects shall be considered in calculating the maximum resistance of the energy dissipation devices; and
2. The pseudo seismic force of Eq. (7-21) shall be calculated with an S_a reduced by the damping modification factors, B_1, in Section 2.4.1.7 to account for the energy dissipation (damping) provided by the energy dissipation devices. The damping modification factor, B_1, shall be calculated based on an effective damping ratio, β_{eff} calculated in accordance with Eq. (14-33):

$$\beta_{\text{eff}} = \beta + \frac{\sum_j W_j}{4\pi W_k} \tag{14-33}$$

where β = the damping in the structural frame and shall be set equal to 0.02 unless modified in Section 7.2.3.6;
W_j = the work done by device j in one complete cycle corresponding to floor displacements δ_i, the summation extends over all devices j; and
W_k = the maximum strain energy in the frame, determined using Eq. (14-32).

The work done by linear viscous device j in one complete cycle of loading shall be calculated in accordance with Eq. (14-34):

$$W_j = \frac{2\pi^2}{T} C_j \delta_{rj}^2 \tag{14-34}$$

where T = the fundamental period of the building including the stiffness of the velocity-dependent devices;
C_j = the damping constant for device j; and
δ_{rj} = the relative displacement between the ends of device j along the axis of device j.

Calculation of effective damping in accordance with Eq. (14-35) rather than Eq. (14-33) shall be permitted for linear viscous devices:

$$\beta_{\text{eff}} = \beta + \frac{T\sum_j C_j \cos^2\theta_j \phi_{rj}^2}{4\pi \sum_i \left(\frac{w_i}{g}\right)\phi_i^2} \tag{14-35}$$

where θ_j = the angle of inclination of device j to the horizontal;
ϕ_{rj} = the first mode relative displacement between the ends of device j in the horizontal direction;
w_i is the reactive weight of floor level i
ϕ_i is the first mode displacement at floor level i.

14.3.4.1.3 Design Actions The design actions for components of the building shall be calculated for both the upper- and lower-bound properties of Section 14.3.2.4 in three distinct stages of deformation as follows. The maximum action shall be used for design.

1. **At the stage of maximum drift.** The seismic forces at each level, F_x, of the building shall be calculated using Eq. 7-24 where V is replaced with the modified equivalent base shear, V^*.
2. **At the stage of maximum velocity and zero drift.** The viscous component of force in each energy dissipation device shall be calculated by Eq. (14-27) or (14-30), where the relative velocity, $\dot{D}$, is given by $2\pi f_1 D$, where D is the relative displacement between the ends of the device calculated at the stage of maximum drift. The calculated viscous forces shall be applied to the mathematical model of the building at the points of attachment of the devices and in directions consistent with the deformed shape of the building at maximum drift. The horizontal inertia forces at each floor level of the building shall be applied concurrently with the viscous forces so that the horizontal displacement of each floor level is zero.
3. **At the stage of maximum floor acceleration.** Design actions in components of the building shall be determined as the sum of actions determined at the stage of maximum drift times CF_1 and actions determined at the stage of maximum velocity times CF_2, where

$$CF_1 = \cos\left[\tan^{-1}(2\beta_{\text{eff}})\right] \tag{14-36}$$

$$CF_2 = \sin\left[\tan^{-1}(2\beta_{\text{eff}})\right] \tag{14-37}$$

in which β_{eff} is defined by either Eq. (14-33) or Eq. (14-35).

14.3.4.2 Linear Dynamic Procedure If the linear dynamic procedure (LDP) is selected based on the requirements of Section 14.3.4 and Section 7.3, the LDP of Section 7.4.2 shall be followed unless explicitly modified by this section.

Use of the response spectrum method of the LDP shall be permitted where the effective damping in the fundamental mode of the building, in each principal direction, does not exceed 30% of critical.

14.3.4.2.1 Displacement-Dependent Devices Application of the LDP for the analysis of buildings incorporating displacement-dependent devices shall comply with the restrictions set forth in Section 14.3.4.1.1.

For analysis by the response spectrum analysis method, modification of the 5% damped response spectrum shall be permitted to account for the damping afforded by the displacement-dependent energy dissipation devices. The 5% damped acceleration spectrum shall be reduced by the modal-dependent damping modification factor, B_1, for periods in the vicinity of the mode

under consideration; the value of B_1 is different for each mode of vibration. The damping modification factor in each significant mode shall be determined in accordance with Section 2.4.1.7 and the calculated effective damping in that mode. The effective damping shall be determined using a procedure similar to that described in Section 14.3.4.1.1.

If the maximum base shear force calculated by dynamic analysis is less than 80% of the modified equivalent base shear of Section 14.3.4.1.1, component and element actions and deformations shall be proportionally increased to correspond to 80% of the modified equivalent base shear of Section 14.3.4.1.1.

14.3.4.2.2 Velocity-Dependent Devices For analysis by the response spectrum analysis method, modification of the 5% damped response spectrum shall be permitted to account for the damping afforded by the velocity-dependent energy dissipation devices. The 5% damped acceleration spectrum shall be reduced by the modal-dependent damping modification factor, B_1, for periods in the vicinity of the mode under consideration; note that the value of B_1 is different for each mode of vibration. The damping modification factor in each significant mode shall be determined in accordance with Section 2.4.1.7 and the calculated effective damping in that mode.

The effective damping in the mth mode of vibration ($\beta_{\text{eff}-m}$) shall be calculated in accordance with Eq. (14-38):

$$\beta_{\text{eff}-m} = \beta_m + \frac{\sum_j W_{mj}}{4\pi W_{mk}} \tag{14-38}$$

where β_m = the mth mode damping in the building frame;
W_{mj} = work done by device j in one complete cycle corresponding to modal floor displacements δ_{mi}; and
W_{mk} = the maximum strain energy in the frame in the mth mode, determined using Eq. (14-39):

$$W_{mk} = \frac{1}{2}\sum_i F_{mi}\delta_{mi} \tag{14-39}$$

where F_{mi} = the mth mode horizontal inertia force at floor level i; and
δ_{mi} is the mth mode horizontal displacement at floor level i.

The work done by linear viscous device j in one complete cycle of loading in the mth mode may be calculated in accordance with Eq. (14-40):

$$W_{mj} = \frac{2\pi^2}{T_m} C_j \delta_{mrj}^2 \tag{14-40}$$

where T_m = the mth mode period of the building, including the stiffness of the velocity-dependent devices;
C_j = the damping constant for device j; and
δ_{mrj} = the mth mode relative displacement between the ends of device j along the axis of device j.

In addition to direct application of the response spectrum analysis method in accordance with this section to obtain member actions at maximum drift, member actions at maximum velocity and maximum acceleration in each significant mode shall be determined using the procedure described in Section 14.3.4.1.2. The combination factors CF_1 and CF_2 shall be determined based on Eqs. (14-36) and (14-37) using $\beta_{\text{eff}-m}$ for the mth mode.

If the maximum base shear force calculated by dynamic analysis is less than 80% of the modified equivalent base shear of Section 14.3.4.1.2, component and element actions and deformations shall be proportionally increased to correspond to 80% of the modified equivalent base shear of Section 14.3.4.1.2.

14.3.5 Nonlinear Analysis Procedures

14.3.5.1 Nonlinear Static Procedure If the nonlinear static procedure (NSP) is selected based on the requirements of Section 14.3.4 and Section 7.3, the NSP of Section 7.4.3 shall be followed unless explicitly modified by this section.

The nonlinear mathematical model of the building shall include the nonlinear force–displacement characteristics of the energy dissipation devices explicitly and the mechanical characteristics of the components supporting the devices. Stiffness characteristics shall be consistent with the deformations corresponding to the target displacement and a frequency equal to the inverse of period T_e, as defined in Section 7.4.3.2.

The nonlinear mathematical model of the building shall include the nonlinear force–velocity–displacement characteristics of the energy dissipation devices and the mechanical characteristics of the components supporting the devices. Energy dissipation devices with stiffness and damping characteristics that are dependent on excitation frequency and/or temperature shall be modeled with characteristics consistent with (1) the deformations expected at the target displacement and (2) a frequency equal to the inverse of the effective period.

Eq. (7-28) shall be used to calculate the target displacement.

C14.3.5.1 Nonlinear Static Procedure The benefit of adding displacement-dependent energy dissipation devices is recognized in this standard by the increase in building stiffness afforded by such devices and the reduction in target displacement associated with the reduction in T_e. The alternative NSP uses a different strategy to calculate the target displacement and explicitly recognizes the added damping provided by the energy dissipation devices.

The benefits of adding velocity-dependent energy dissipation devices include the increase in stiffness and equivalent viscous damping in the building frame. For most velocity-dependent devices, the primary benefit results from the added viscous damping. Higher mode damping forces in the energy dissipation devices must be evaluated regardless of the NSP used.

14.3.5.1.1 Displacement-Dependent Devices The stiffness characteristics of the energy dissipation devices shall be included in the mathematical model.

14.3.5.1.2 Velocity-Dependent Devices The target displacement and the spectral acceleration, S_a, in Eq. (7-28) shall be reduced to account for the damping added by the velocity-dependent energy dissipation devices. The calculation of the damping effect shall be calculated in accordance with Eq. (14-41):

$$\beta_{\text{eff}} = \beta + \frac{\sum_j W_j}{4\pi W_k} \tag{14-41}$$

where β = the damping in the structural frame and shall be set equal to 0.02 unless modified in Section 7.2.3.6;
W_j = the work done by device j in one complete cycle corresponding to floor displacements δ_j, the summation extends over all devices j; and
W_k = the maximum strain energy in the frame, determined using Eq. (14-32).

The work done by device j in one complete cycle of loading shall be calculated based on Eq. (14-42):

$$W_j = \frac{2\pi^2}{T_{ss}} C_j \delta_{rj}^2 \tag{14-42}$$

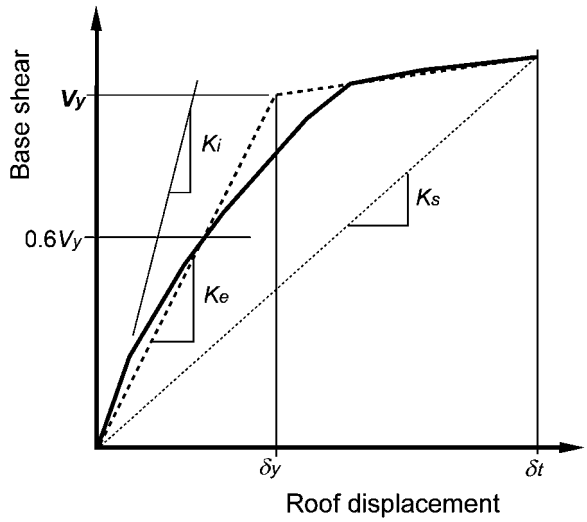

FIG. 14-1. Calculation of Secant Stiffness, K_s

where T_{ss} = the secant fundamental period of the building, including the stiffness of the velocity-dependent devices (if any), calculated using Eq. (7-27) but replacing the effective stiffness, K_e, with the secant stiffness, K_s, at the target displacement as shown in Fig. 14-1;

C_j is the damping constant for device j; and δ_{rj} is the relative displacement between the ends of device j along the axis of device j at a roof displacement corresponding to the target displacement.

The acceptance criteria of Section 7.5.3 shall apply to buildings incorporating energy dissipation devices. Checking for displacement-controlled actions shall use deformations corresponding to the target displacement. Checking for force-controlled actions shall use component actions calculated for three limit states: maximum drift, maximum velocity, and maximum acceleration. Maximum actions shall be used for design. Higher mode effects shall be explicitly evaluated.

C14.3.5.1.2 Velocity-Dependent Devices The use of Eq. (14-41) generally captures the maximum displacement of the building.

14.3.5.2 Nonlinear Dynamic Procedure If the NDP is selected based on the requirements of Section 14.3.4 and Section 7.3, a nonlinear dynamic analysis shall be performed as required by Section 7.4.4, except as modified by this section. The mathematical model shall account for both the plan and vertical spatial distribution of the energy dissipation devices in the building. If the energy dissipation devices are dependent on excitation frequency, operating temperature (including temperature rise caused by excitation), deformation (or strain), velocity, sustained loads, and bilateral loads, such dependence shall be accounted for in the analysis by assuming upper- and lower-bound properties to bound the solution as specified in Section 14.3.2.4. In the NDP, the energy dissipation devices shall be modeled as nonlinear elements. If the members of the structure remain essentially elastic, they shall be permitted to be modeled with linear elements.

The viscous forces in velocity-dependent energy dissipation devices shall be included in the calculation of design actions and deformations. Substitution of viscous effects in energy dissipation devices by global structural damping for nonlinear time-history analysis shall not be permitted.

Table C14-3. Acceptable Analysis Cases for Accidental Eccentricity

Case	Damper Properties	Accidental Eccentricity
I	Lower bound	No
IIa	Lower bound	Yes, *X* direction
IIb	Lower bound	Yes, *Y* direction

C14.3.5.2 Nonlinear Dynamic Procedure If energy dissipation devices are dependent on loading frequency, operating temperature (including temperature rise caused by excitation), deformation (or strain), velocity, sustained loads, and bilateral loads, such dependence should be accounted for in the nonlinear time-history analysis. One way to account for variations in the force–deformation response of energy dissipation devices is to perform multiple analyses of the rehabilitated building using the likely bounding response characteristics of the energy dissipation devices. The design of the retrofitted building, including the energy dissipation devices, should be based on the maximum responses computed from the multiple analyses.

The viscous forces (if any) developed in the seismic framing system should be accounted for in the analysis and design of the seismic framing system. Evaluation of member action histories should be based on nodal displacements (operating on member stiffness matrices) and nodal velocities (operating on member damping matrices).

Key to the acceptable response of a retrofitted building incorporating energy dissipation devices is the stable response of the energy dissipation devices. The forces and deformations in the energy dissipation devices that develop during the design earthquake should be demonstrated to be adequate by prototype testing in accordance with Section 14.3.8.

14.3.5.2.1 Accidental Eccentricity The effects of accidental eccentricity may be considered by performing multiple analyses with mass shifted in each direction along each principal axis in turn. Alternatively, amplification factors on forces, drifts, and deformations may be rationally established to account for the effects of mass eccentricity. These factors may then be applied to the center-of-mass analysis results to incorporate accidental eccentricity effects.

C14.3.5.2.1 Accidental Eccentricity The following procedure is one acceptable method of developing appropriate amplification factors for deformations and forces for use with center-of-mass NDP analyses, to account for the effects of accidental torsion. The use of other rationally based amplification factors is permitted.

The most critical directions for moving the calculated center of mass are such that the accidental eccentricity adds to the inherent eccentricity in each principal direction at each level. For each of these two eccentric mass cases, and with lower-bound damper properties, the suite of NDP analyses should be run, and the results should be processed. The analysis cases are defined in Table C14-3.

The results from Cases IIa and IIb are then compared with those from Case I. The following amplification factors (ratio of Case IIa or IIb response to Case I response) are computed:

1. The amplification of story drift in the structure at the plan location with the highest drift, enveloped over all stories and
2. The amplification of frame-line shear forces at each story for the frame subjected to the maximum drift.

The larger of the two resulting scalars on drift should be used as the deformation amplifier, and the larger of the two resulting scalars on force should be used as the force amplifier. If both of these scalars are less than 1.1, the effects of accidental torsion need not be considered. If either scalar is greater than or equal to 1.1, the effects of accidental eccentricity should be considered as follows:

NDP analyses of record need consider only the model reflecting the inherent mass eccentricity. Damper property variation need only be considered for this model. Response quantities should be computed per Section 7.4.4.2.3. All deformation response quantities should be increased by the deformation amplifier, and all force quantities should be increased by the force amplifier, before being used for evaluation or design.

14.3.6 Detailed Systems Requirements

14.3.6.1 General The energy dissipation system and the remainder of the seismic-force-resisting system shall comply with the detailed systems requirements specified in this section. Upper- and lower-bounding analyses shall be performed to account for the variation in device properties as specified in Section 14.3.2.4.

14.3.6.2 Wind Forces The fatigue life of energy dissipation devices, or components thereof, including seals in a fluid viscous device, shall be investigated and shown to be adequate for the design life of the devices. Devices subject to failure by low-cycle fatigue shall resist wind forces in the linearly elastic range.

14.3.6.3 Inspection and Replacement Access for inspection and replacement of the energy dissipation devices shall be provided.

14.3.6.4 Manufacturing Quality Control A manufacturing quality control plan for production of energy dissipation devices shall be established by the design professional. This plan shall include descriptions of the manufacturing processes, inspection procedures, and testing necessary to ensure quality control of production devices.

At a minimum, the QC testing program shall evaluate the consistency of results from a specified sample of device units. The results of each test shall be verified to fall within an acceptable range of properties described in the project specifications. These limits shall agree with the specification tolerances on nominal design properties established in Section 14.3.2.2 for the average properties of all devices of a given type.

C14.3.6.4 Manufacturing Quality Control The registered design professional must define in the project specifications the scope of the manufacturing quality control test program and allowable variations in the measured properties of the production energy dissipation devices. Typically 100% of the devices of a given size are tested, and the allowable variation of the mean shall be within the specified tolerance of Section 14.3.2.2 (typically ±10% or ±15%). Individual devices may be permitted a wider variation (typically ±15% or ±20%) from the nominal design properties when all devices of a given size are tested. For example, in a device characterized by $F = Cv^{\alpha}$, the mean of the force at a specified velocity for all tested devices might be permitted to vary no more than ±10% from the specified value of force, but the force at a specified velocity for any individual device might be permitted to vary no more than ±15% from the specified value of force. If less than 100% of the devices of a given size are tested, then each device shall meet the specified tolerance of Section 14.3.2.2. The registered design professional should decide on the acceptable range of variation of energy dissipation device properties on a project-by-project basis.

Current typical practice is to perform quality control testing on all devices, but there is no codified requirement to do so. Factors that may influence the decision on the number of production devices to be tested include the complexity of the device, expected variations in material properties, and the experience of the manufacturer with producing the specified type and size of the device.

It is good practice to give consideration to the overall cost and schedule impacts of performing multiple types of quality control tests, and only those tests that are directly relevant to verifying the design properties of the device should be specified.

14.3.6.5 Maintenance The design professional shall establish a maintenance and testing schedule for energy dissipation devices to obtain reliable response of the devices over the design life of the structure. The degree of maintenance and testing shall reflect the established in-service history of the devices.

14.3.7 Design Review A review of the design of a structure with energy dissipation devices and related test programs shall be performed by an independent engineer (or engineers) experienced in design and analysis of structures incorporating energy dissipation devices, in accordance with the requirements of Section 1.5.10.

As a minimum, the following items shall be included in the design review:

1. Project design criteria;
2. Device selection;
3. Preliminary design, including the determination of the structure lateral displacements and the device displacement, velocity, and force demands;
4. Review of a prototype testing program to be conducted in accordance with Section 14.3.8, or on the basis for use of data from similar devices;
5. Final design of the building, incorporating energy dissipation devices and the supporting analyses; and
6. Review of the manufacturing quality control testing program.

C14.3.7 Design Review In the early applications of energy dissipation, many design review panels included three individuals to cover the range of expertise required in the design review, including the site-specific seismic and other criteria and the prototype testing of the devices. Design review may now be performed by just one individual. On more significant structures, a local jurisdiction may require a design review panel with two or three individuals, but for many structures incorporating energy dissipation devices, one well qualified and experienced design reviewer is adequate.

Review of the seismic and other dynamic input is still required because this review should be a part of the project design criteria. Although review of the prototype test program is mandated, the design reviewer is no longer required to witness the prototype tests.

14.3.8 Required Tests of Energy Dissipation Devices

14.3.8.1 General The force–velocity–displacement relations and damping values assumed as the nominal design properties in Section 14.3.2.1 of the energy dissipation device shall be confirmed by the tests conducted in accordance with this section before production of devices for construction, or they shall be based on prior tests of devices of a similar size.

The tests specified in this section shall be conducted to (1) confirm the force–velocity–displacement properties of the energy dissipation devices assumed for design and (2) demonstrate the robustness of individual devices to extreme seismic

excitation. These tests shall not be considered as satisfying the manufacturing quality control (production) plan of Section 14.3.6.4.

The design professional shall provide explicit acceptance criteria for the relevant device properties established by the prototype tests. These criteria shall reflect the nominal design values, account for likely variations in material properties, and provide limiting response values outside of which devices are rejected. Specification tolerances on the nominal design values are given in Section 14.3.2.2.

The design professional shall provide explicit acceptance criteria for the relevant device properties established by the production tests of Section 14.3.6.4 that are consistent with those of Section 14.3.2.2. The results of the prototype tests shall form the basis of the acceptance criteria for the production tests unless an alternate basis is established by the design professional in the specification. Such acceptance criteria shall recognize the influence of loading history on the response of individual devices by requiring production testing of devices before prototype testing.

The fabrication and quality control procedures used for all prototype and production devices shall be identical. These procedures shall be approved by the design professional before the fabrication of prototype devices.

14.3.8.2 Prototype Tests

14.3.8.2.1 General The following prototype tests shall be performed separately on two full-sized devices of each type and size used in the design. If approved by the design professional, selection of representative sizes of each type of device shall be permitted for prototype testing, rather than each type and size, provided that the fabrication and quality control procedures are identical for each type and size of device used in the building.

Test specimens shall not be used for construction unless approved in writing by the design professional.

14.3.8.2.2 Data Recording The force–velocity–displacement relationship for each cycle of each test shall be recorded electronically.

14.3.8.2.3 Sequence and Cycles of Testing For the following minimum test sequence, each energy dissipation device shall be loaded to simulate the gravity loads on the device as installed in the building and the extreme ambient temperatures anticipated:

1. Each device shall be loaded with the number of cycles expected in the design windstorm, but not less than 2,000 fully reversed cycles of load (displacement-dependent and viscoelastic devices) or displacement (viscous devices) at amplitudes expected in the design windstorm, at a frequency equal to the inverse of the fundamental period of the building.

EXCEPTION: Devices not subject to wind-induced forces or displacements need not be subjected to these tests. Alternate loading protocols that apportion the total wind displacement into their expected static, pseudo static, and dynamic components shall be acceptable.

2. Each device shall be subjected to the following sequence of tests, all at a frequency equal to the inverse of the fundamental period of the upgraded building:
   (a) Ten fully reversed cycles at the displacement in the energy dissipation device corresponding to 0.25 times the BSE-2X device displacement or 0.5 times the BSE-1X displacement for an LPO;
   (b) Five fully reversed cycles at the displacement in the energy dissipation device corresponding to 0.5 times the BSE-2X device displacement or 1.0 times the BSE-1X displacement for an LPO; and
   (c) Three fully reversed cycles at the displacement in the energy dissipation device corresponding to 1.0 times the BSE-2X device displacement or 2.0 times the BSE-1X displacement for an LPO.

EXCEPTION: Testing methods for energy dissipation devices other than those noted above shall be permitted, provided that (1) equivalency between the proposed method and cyclic testing can be demonstrated; (2) the proposed method captures the dependence of the energy dissipation device response to ambient temperature, frequency of loading, and temperature rise during testing; and (3) the proposed method is approved by the design professional.

C14.3.8.2.3 Sequence and Cycles of Testing Energy dissipation devices should not form part of the gravity-load-resisting system but may be required to support some gravity load.

14.3.8.2.4 Devices Dependent on Velocity and/or Frequency of Excitation If the force–deformation properties of the energy dissipation devices at any displacement less than or equal to the total design displacement change by more than 15% for changes in testing frequency from $0.5f_1$ to $2.0f_1$, the preceding tests shall be performed at frequencies equal to $0.5f_1$, $1.0f_1$, and $2.0f_1$.

EXCEPTION: If reduced-scale prototypes are used to quantify the rate-dependent properties of energy dissipation devices, the reduced-scale prototypes shall be of the same type and materials—and manufactured with the same processes and quality control procedures—as full-scale prototypes and tested at a similitude-scaled frequency that represents the full-scale loading rates.

14.3.8.2.5 Devices Dependent on Out-of-Plane Displacement If the energy dissipation devices are subjected to out-of-plane deformation, the preceding tests shall be made at both zero out-of-plane displacement and peak out-of-plane displacement in the BSE-2X or 2.0 times the BSE-1X displacement for an LPO.

EXCEPTION: If reduced-scale prototypes are used to quantify the bilateral displacement properties of the energy dissipation devices, the reduced-scale prototypes shall be of the same type and materials, and manufactured with the same processes and quality control procedures as full-scale prototypes and shall be tested at similitude-scaled displacements that represent the full-scale displacements.

14.3.8.2.6 Devices Dependent on Temperature If the characteristics of the energy dissipation devices are dependent on temperature, at least one prototype device shall be subjected to the tests of Section 14.3.8.2.3 Items 2 (a) to (c), at the low- and high-temperature values anticipated for the design application.

14.3.8.2.7 Testing Similar Devices Energy dissipation devices that are (1) of similar size, identical materials, internal construction, and static and dynamic internal pressures (if any) and (2) fabricated with identical internal processes and manufacturing quality control procedures and have been previously tested by an independent laboratory in the manner described above need not be tested, provided that:

1. All pertinent testing data are made available to, and are approved by, the design professional;
2. The manufacturer can substantiate the similarity of the previously tested devices to the satisfaction of the design professional; and

3. The submission of data from a previous testing program is approved in writing by the design professional.

14.3.8.3 Determination of Force–Velocity–Displacement Characteristics The force–velocity–displacement characteristics of an energy dissipation device shall be based on the cyclic load and displacement tests of prototype devices specified in Section 14.3.8.2.

As required, the effective stiffness (k_{eff}) of an energy dissipation device with stiffness shall be calculated for each cycle of deformation in accordance with Eq. (14-43):

$$k_{eff} = \frac{|F^-| + |F^+|}{|\Delta^-| + |\Delta^+|} \tag{14-43}$$

where forces F^+ and F^- shall be calculated at displacements Δ^+ and Δ^-, respectively. The effective stiffness of an energy dissipation device shall be established at the test displacements given in Section 14.3.8.2.3.

The equivalent viscous damping of an energy dissipation device (β_{eff}) exhibiting stiffness shall be calculated for each cycle of deformation based on Eq. (14-44):

$$\beta_{eff} = \frac{1}{2\pi} \frac{W_D}{k_{eff}\Delta_{ave}^2} \tag{14-44}$$

where k_{eff} shall be calculated in accordance with Eq. (14-43), and W_D shall be taken as the area enclosed by one complete cycle of the force–displacement response for a single energy dissipation device at a prototype test displacement, Δ_{ave}, equal to the average of the absolute values of displacements Δ^+ and Δ^-, $(|\Delta^+| + |\Delta^-|) / 2$.

14.3.8.4 Device Adequacy The performance of a prototype device shall be considered adequate if all of the following conditions are satisfied:

1. The force–displacement curves for the tests in Section 14.3.8.2.3 have nonnegative incremental force-carrying capacities.

EXCEPTION: Energy dissipation devices that exhibit velocity-dependent behavior need not comply with this requirement.

2. Within each test of Section 14.3.8.2.3, the effective stiffness (k_{eff}) of a prototype energy dissipation device for any one cycle does not differ by more than ±15% from the average effective stiffness as calculated from all cycles in that test.

EXCEPTIONS: (1) The 15% limit may be increased by the design professional in the specification, provided that the increased limit has been demonstrated by analysis not to have a deleterious effect on the response of the building; and (2) fluid viscous energy dissipation devices, and other devices that do not have effective stiffness, need not comply with this requirement.

3. Within each test of Section 14.3.8.2.3, the maximum force and minimum force at zero displacement for a prototype device for any one cycle does not differ by more than ±15% from the average maximum and minimum forces as calculated from all cycles in that test.

EXCEPTION: The 15% limit may be increased by the design professional in the specification, provided that the increased limit has been demonstrated by analysis not to have a deleterious effect on the response of the building.

4. Within each test of Section 14.3.8.2.3, the area of the hysteresis loop, W_D, of a prototype energy dissipation device for any one cycle does not differ by more than ±15% from the average area of the hysteresis curve as calculated from all cycles in that test.

EXCEPTION: The 15% limit may be increased by the design professional in the specification, provided that the increased limit has been demonstrated by analysis not to have a deleterious effect on the response of the rehabilitated building.

5. For displacement-dependent devices, the average effective stiffness, average maximum and minimum force at zero displacement, and average area of the hysteresis loop, W_D, calculated for each test in the sequence described in Section 14.3.8.2.3, shall fall within the limits set by the design professional in the specification.
6. For velocity-dependent devices, the average maximum and minimum force at zero displacement, effective stiffness for viscoelastic devices only, and average area of the hysteresis loop, W_D, calculated for each test in the sequence described in Section 14.3.8.2.3, shall fall within the limits set by the design professional in the specification.

14.4 OTHER RESPONSE CONTROL SYSTEMS

The analysis and design of other response control systems shall be reviewed by an independent engineering review panel in accordance with the requirements of Section 14.3.7. This review panel shall be selected by the owner before the development of the preliminary design.

C14.4 OTHER RESPONSE CONTROL SYSTEMS

Response control strategies other than seismic isolation (Section 14.2) and passive energy dissipation (Section 14.3) systems have been proposed. Dynamic vibration absorption and active control systems are two such response control strategies. Although both dynamic vibration absorption and active control systems have been implemented to control the wind-induced vibration of buildings, the technology is not sufficiently mature and the necessary hardware is not sufficiently robust to warrant the preparation of general guidelines for the implementation of other response control systems. In cases where such systems are proposed, the review panel should consist of at least two individuals, one of whom has expertise in control systems.

This page intentionally left blank

CHAPTER 15
SYSTEM-SPECIFIC PERFORMANCE PROCEDURES

15.1 SCOPE

This chapter provides alternate procedures for the seismic evaluation and retrofit of certain building types as indicated in this section. The application of an alternative procedure is limited to those conditions specified for the alternative procedure. When applied consistently with the limitations of the alternative procedure, the resulting modified structure is deemed to comply with the requirements of this standard as stated in the alternative procedure.

The individual procedures are provided as stand-alone procedures to be used on their own basis and not as a part of other procedures in this document. The basis for the individual procedures is that the information available warrants its use for the particular system application and limitations to achieve the stated seismic Performance Objective. In each case, the standard contains the following items:

1. A specification of the structural systems and circumstances in which the procedure may be used. This specification includes the limits on application of the procedure in lieu of other procedures of this standard.
2. The seismic Performance Objective of the building using the alternate procedure; the same terminology is used for specification of the seismic Performance Objective and hazard levels as used in this standard for the specified Seismic Hazard Level.
3. The specific technical procedures.

In each case, application of the system-specific performance procedure is whole unto itself and is considered to be an acceptable alternative to achieve the stated seismic Performance Objective compared with other approaches contained within this standard.

C15.1 SCOPE

The intent of this chapter is to permit the use of well established procedures for evaluating and retrofitting buildings that are different from the analysis procedures for Tier 2 and Tier 3 of this standard. This standard includes only the special procedure for unreinforced masonry from ASCE 31-03, but the intent is that in future editions of the standard this chapter will include additional alternate procedures for specific building systems as they are developed and evaluated. The individual procedures are only valid for the performance objectives specified in the respective sections.

Currently, many special procedures are in use as parts of model building codes and individual jurisdictions' enforced building code provisions that have not been officially adopted and incorporated into this chapter. These other special procedures have not been evaluated to determine the seismic performance objectives achieved by their application. That is not to say that those provisions should not be used for seismic evaluation or retrofit but that if they are used and the user wishes to declare equivalence to a Performance Objective in this standard it shall be the responsibility of the authority having jurisdiction and potentially an independent reviewer, if the jurisdictional authority feels it necessary, to confirm that declaration.

An ASCE 41-13 seismic Performance Level must be determined by use of the procedures of this standard with a specified Seismic Hazard Level. Tier 1, 2, or 3 evaluations may be used for this purpose. The limitations and conditions stated in the referenced regulations for their application should be followed.

The *International Existing Building Code* (ICC 2012b) provides five special procedures in its Appendix A, "Guidelines for the Seismic Retrofit of Existing Buildings" that can be considered as candidate additional special procedures:

1. Chapter A1. Seismic Strengthening Provisions for Unreinforced Masonry Bearing Wall Buildings;
2. Chapter A2. Earthquake Hazard Reduction in Existing Reinforced Concrete and Reinforced Masonry Flexible Diaphragm;
3. Chapter A3. Prescriptive Provisions for Seismic Strengthening of Cripple Walls and Sill Plate Anchorage of Light, Wood-Framed Residential Buildings;
4. Chapter A4. Earthquake Hazard Reduction in Existing Wood-Frame Residential Buildings with Soft, Weak, or Open-Front Walls; and
5. Chapter A5. Earthquake Hazard Reduction in Existing Concrete Buildings.

As a note, the unreinforced masonry provisions of Section 15.2 are similar to those of Chapter A1 of the IEBC (ICC 2012b) for buildings with flexible diaphragms. The committee for this standard considered the requirements of Chapter A1 in revisions of the special procedure of Section 15.2. IEBC (ICC 2012b), Chapter A5, was based on and has several references to portions of ASCE 41-06 and ASCE 31-03.

Many building departments have other special procedures that can be considered. Among these are those of the Los Angeles Building Code:

1. Chapter 88. Earthquake Hazard Reduction in Existing Buildings (in unreinforced masonry buildings constructed before 1934);
2. Chapter 91. Earthquake Hazard Reduction in Existing Tilt-Up Concrete Wall Buildings;
3. Chapter 95. Voluntary Earthquake Hazard Reduction in Existing Reinforced Concrete Buildings and Concrete Frame Buildings with Masonry Fill; and
4. Chapter 96. Voluntary Earthquake Hazard Reduction in Existing Reinforced Concrete and Masonry Wall Buildings with Flexible Diaphragms.

In some cases, these chapters are on comparable topics to the IEBC (ICC 2012b), but they contain different requirements. This standard takes no position as to which is preferred. There are many other examples that may be applied from other jurisdictions.

The use of such a special procedure may address only some of the deficiencies of an existing building that may be identified in an evaluation using this standard. It is advisable that when these procedures are applied voluntarily, one should assess whether other major deficiencies exist that are not addressed by the procedure that could be important to achieving the client's objectives. The review of the application of any special procedure should always consider whether the modification of some elements increase the hazard to other elements of the building, thereby increasing the seismic hazard posed by the building.

15.2 SPECIAL PROCEDURE FOR UNREINFORCED MASONRY

15.2.1 Scope This procedure shall be permitted to meet a Limited Performance Objective of Section 2.2.3 for unreinforced masonry bearing wall buildings meeting the limitations of this section. Specifically, the procedure shall be permitted for Reduced Performance Objective Item 3 of Section 2.2.3.1, the Collapse Prevention Performance Level (S-5) for BSE-1E Seismic Hazard Level demands. This special procedure is consistent with the Tier 2 deficiency-based procedures of Chapter 5 for the Performance Objective indicated but is not permitted for Tier 3 systematic evaluation and retrofit in accordance with Chapter 6.

This special procedure shall be permitted to apply to unreinforced masonry bearing wall buildings with the following characteristics:

- Flexible diaphragms at all levels above the base of the structure;
- A minimum of two lines of walls in each principal direction, except for single-story buildings with an open front on one side; and
- A maximum of six stories above the base of the structure.

C15.2.1 Scope The intent of this chapter is to permit the use of special procedure for unreinforced masonry bearing wall buildings. As stated in previous building codes (ICBO 1997 and ICC 2012), "the purpose of the special procedure is to promote public safety and welfare by reducing the risk of death or injury that may result from the effects of earthquakes on existing reinforced masonry bearing wall buildings … compliance will not necessarily prevent loss of life or injury, or prevent earthquake damage to retrofitted buildings."

This procedure was developed in the 1980s (ABK 1984) and has been included in various codes and standards, including FEMA 178 (1992b), *Uniform Code for Building Conservation* (ICBO 1997), ASCE 31-03, and *International Existing Building Code* (ICC 2012b). The procedure has received widespread use in the United States and has been a valuable tool in the evaluation and upgrade of unreinforced masonry structures, particularly historic buildings. Limited experimental testing, analyses, and experience have shown that structures upgraded using the special procedure or its predecessor procedures have generally met the Collapse Prevention Level for at least ground motions with a 20% probability of exceedance.

The expected performance is limited to risk reduction for extreme ground motions or alternatively limited to Collapse Prevention for moderate ground motions for the following reasons:

- The original testing and analysis in the ABK (1984) program was based on the ground motion information available at that time. Time-history records were scaled to ATC-3 (1978) spectra for various regions of the country. The spectra had peak velocities of 30 in./s in coastal California and of 15 in./s in the Puget Sound and Wasatch areas. Soil amplification effects were not included in the scaled time histories. The ATC-3 (1978)/ABK (1984) velocities are close to the current peak velocities in these respective regions for 20% in 50 year ground motions and Site Class C. These velocities are much lower than those for the extreme events that are considered elsewhere in this standard. For buildings on Site Class D or softer soils, peak velocities could significantly exceed those considered in the ABK (1984) program.
- In addition to the limitations on amplitude, the time histories used in the ABK (1984) program did not include either the near-fault pulse effects or the long duration subduction zone effects that have been recorded in numerous earthquakes since the 1980s.
- Many unreinforced masonry buildings evaluated or upgraded using the special procedure have experienced moderate ground motions (e.g., the Loma Prieta, Northridge, and Nisqually earthquakes) and have met the Collapse Prevention Performance Objective. In fact, many of these buildings met the Immediate Occupancy Performance Objective in areas of lower ground motions. However, at this time, few upgraded buildings have been subjected to extreme ground motions, pulse effects, or long duration effects. Finally, it would be reasonable to assume higher performance for unreinforced masonry buildings in regions of lower seismicity that are not subject to these types of ground motion effects.
- The special procedure has not been analytically calibrated to the acceptance criteria in Section 7.5. This subject is a potential area for future research.

The limiting building characteristics for the procedure are based on assumptions used in the original ABK research and testing (1984).

15.2.2 General Requirements

15.2.2.1 Condition of Materials At a minimum, all existing materials used as part of the required vertical-load-carrying and seismic-force-resisting system shall be evaluated using the on-site investigation provisions of Section 4.2.

Facing and backing of multi-wythe walls shall be bonded so that not less than 10% of the exposed face area is composed of solid headers extending not less than 4 in. into the backing. Where backing consists of two or more wythes, the headers shall extend not less than 4 in. into the most distant wythe, or the backing wythes shall be bonded together with separate headers for which the area and spacing conform to the foregoing. Wythes of walls not meeting these requirements shall be considered veneer and shall not be included in the effective thickness used in calculation of the height-to-thickness ratio and shear strength of the wall.

EXCEPTION: Where S_{XS} is 0.50 or less, veneer wythes anchored in accordance with the jurisdiction having authority and made composite with backup masonry are permitted for the calculation of the effective thickness.

15.2.2.2 Testing All unreinforced masonry (URM) walls used to carry vertical loads or resist seismic forces parallel and per-

pendicular to the wall plane shall be tested. The shear tests shall be taken at locations representative of the mortar conditions throughout the building. Test locations shall be determined by the design professional in charge. Results of all tests and their locations shall be recorded.

The minimum number of tests per masonry class shall be determined as follows:

- At each of both the first and top stories, not less than two tests per wall or line of wall elements providing a common line of resistance to seismic forces;
- At each of all other stories, not less than one test per wall or line of wall elements providing a common line of resistance to seismic forces; and
- Not less than one test per 1,500 ft^2 of wall surface or less than a total of eight tests.

For masonry walls that use high shear strength mortar, masonry testing shall be performed in accordance with Section 15.2.2.2.2. The quality of mortar in all other coursed masonry walls shall be determined by performing tests in accordance with Section 15.2.2.2.1.

C15.2.2.2 Testing In choosing test locations one should consider factors such as workmanship at different building height levels, weathering of exterior surfaces, condition of interior surfaces, and deterioration caused by water or other substances contained within the building.

Pointing. Nothing should prevent pointing with mortar of all the masonry wall joints before the tests are made. All deteriorated mortar joints in URM walls should be pointed. Pointing should be performed under a permit and with special inspection. Any raking of mortar joints or drilling in URM structures should be done using nonimpact tools.

Collar Joints of Multi-Wythe Masonry. The collar joints should be inspected at the test locations during each in-place shear test, and estimates of the percentage of the surfaces of adjacent wythes that are covered with mortar should be reported with the results of the in-place shear tests.

Unreinforced Masonry Classes. All existing unreinforced masonry should be categorized into one or more classes based on strength, quality of construction, state of repair, deterioration, and weathering. A class should be characterized by the masonry strength determined in accordance with Section 15.2.2.3. Classes should be defined for whole walls, not for small areas of masonry within a wall. Discretion in the definition of classes of masonry is permitted to avoid unnecessary testing.

15.2.2.2.1 In-Place Mortar Test Mortar shear test values, v_{to}, shall be calculated for each in-place shear test in accordance with Eq. (15-1). Individual unreinforced masonry walls with 50% of mortar test values less than 30 lb/in.^{2} shall be pointed and retested.

$$v_{to} = \frac{V_{\text{test}}}{A_b} - P_{D+L} \tag{15-1}$$

where V_{test} = Load at first observed movement;
A_b = Total area of the bed joints above and below the test specimen; and
P_{D+L} = Stress resulting from actual dead plus live loads in place at the time of testing.

The mortar shear strength, v_{te}, is defined as the value exceeded by 80% of all mortar shear test values, v_{to}. Unreinforced masonry with mortar shear strength, v_{te}, less than 30 lb/in.^{2} shall be pointed and retested.

C15.2.2.2.1 In-Place Mortar Test The available standard for masonry shear strength test is ASTM C1531, *Standard Test Methods for In Situ Measurement of Masonry Mortar Joint Shear Strength Index*. Multi-wythe masonry laid with headers should use the in-place shear push test. The bed joints of the outer wythe of the masonry should be tested in shear by laterally displacing a single brick relative to the adjacent bricks in the same wythe. The head joint opposite the loaded end of the test brick should be excavated and cleared. The brick adjacent to the loaded end of the test brick should be removed and excavated to provide space for a hydraulic ram and steel loading blocks. Steel blocks, the size of the end of the brick, should be used on each end of the ram to distribute the load to the brick. The blocks should not contact the mortar joints. The load should be applied horizontally, in the plane of the wythe. Load should be recorded at the first sign of movement of the test brick as indicated by spalling of the face of the mortar bed joints. The strength of the mortar should be calculated by dividing the load at the first movement of the test brick by the nominal gross area of the sum of the two bed joints.

15.2.2.2.2 Masonry The tensile-splitting strength, f_{sp}, of existing masonry using high-strength mortar shall be determined in accordance with the one of the following:

- The tensile-splitting strength of a core sample shall be determined in accordance with ASTM C496. The tensile-splitting strength shall be calculated in accordance with Eq. (15-2).

$$f_{sp} = \frac{2P_{\text{test}}}{\pi a_n} \tag{15-2}$$

- The tensile-splitting strength of a sawn rectangle shall be determined in accordance with ASTM E519. The tensile-splitting strength shall be calculated in accordance with Eq. (15-3).

$$f_{sp} = \frac{0.494P_{\text{test}}}{a_n} \tag{15-3}$$

where P_{test} = Splitting test load and
a_n = Diameter of core multiplied by its length or area of the side of a square prism.

The minimum average value of tensile-splitting strength, f_{sp}, as calculated by Eq. (15-2) or (15-3), shall be 50 lb/in.^{2} Individual unreinforced masonry walls with an average tensile-splitting strength of less than 50 lb/in.^{2} shall be pointed and retested.

C15.2.2.2.2 Masonry Different types of masonry require different tests to determine the shear strength. As a general guide for selecting the correct test method for modern masonry, the design professional should consider using a core tested as prescribed in ASTM C496 to determine the tensile-splitting stress, although this test is intended for concrete, not masonry. The tensile-splitting stress is the same as the horizontal shear stress. Wythes of solid masonry units should be tested by sampling the masonry by drilled cores of not less than 8 in. in diameter. A bed joint intersection with a head joint should be in the center of the core. The core shall be placed in the test apparatus with the bed joint 45 degrees from the horizontal.

Another method is to use a square prism extracted from the wall that is tested as prescribed in ASTM E519 to determine the tensile-splitting stress. Hollow unit masonry constructed of through-the-wall units should be tested by sampling the masonry

by a sawn prism of not less than 18 in. square. The diagonal of the prism should be placed in a vertical position. The effect of axial loading on the tensile-splitting stress must be added for the expected horizontal shear stress.

Estimation of f'_m should be limited to recently constructed masonry. The determination of f'_m requires the unit corresponding to a specification of the unit by an appropriate ASTM standard and classification of the mortar by type. The source of the masonry units should be traced for the unit compressive strength. Then the unit compressive strength with the mortar class on the available construction documents should be used to determine f'_m.

15.2.2.2.3 Wall Anchors Wall anchors used as part of the required tension anchors shall be tested in pullout. Results of all tests shall be reported. A minimum of four anchors per floor shall be tested but not less than 10% of the total number of tension anchors at each level. Two tests per floor shall occur at walls with joists framing into the wall, and two tests per floor shall occur at walls with joists parallel to the wall. The strength of the wall anchors shall be calculated as the average of the tension test values of anchors having the same wall thickness and framing orientation.

C15.2.2.2.3 Wall Anchors The test apparatus for testing wall anchors should be supported by the masonry wall. The distance between the anchor and the test apparatus support should not be less than the wall thickness. Existing wall anchors should be given a preload of 300 lb before establishing a datum for recording elongation. The tension test load reported should be recorded at 1/8-in. relative movement of the anchor and the adjacent masonry surface. The test report should include the test results as related to the wall thickness and framing orientation.

15.2.2.3 Masonry Strength

15.2.2.3.1 Shear Strength The expected unreinforced masonry strength, v_{me}, shall be determined for each masonry class in accordance with the following:

- When testing in accordance with Section 15.2.2.2.1 is performed, v_{me} shall be calculated in accordance with Eq. (15-4).

$$v_{me} = 0.56 v_{te} + \frac{0.75 P_D}{A_n} \tag{15-4}$$

- When testing in accordance with Section 15.2.2.2.2 is performed, v_{me} shall be calculated in accordance with Eq. (15-5).

$$v_{me} = 0.8 f_{sp} + \frac{0.5 P_D}{A_n} \tag{15-5}$$

where v_{te} = Mortar shear strength calculated in Section 15.2.2.2.1;
f_{sp} = Tensile-splitting strength calculated in Section 15.2.2.2.2;
P_D = Superimposed dead load at the top of the pier under consideration (lb); and
A_n = Area of net mortared/grouted section (in.^{2}).

- When the value of f'_m is assumed in accordance with Section 15.2.2.2.2, v_{me} shall be taken as the minimum of the following:
  - $2.5\sqrt{f'_m}$;
  - 200 lb/in.^{2}; or
  - $v + \dfrac{0.75 P_D}{A_n}$

where v = 62.5 lb/in.^{2} for running bond masonry not grouted solid;
v = 100 lb/in.^{2} for running bond masonry grouted solid;
v = 25 lb/in.^{2} for stack bond masonry grouted solid; and
f'_m = Compressive strength of masonry.

15.2.2.3.2 Axial Strength The allowable compressive stress in unreinforced masonry caused by dead plus live loads shall be taken as 300 lb/in.^{2} Tensile stress is not permitted in unreinforced masonry.

C15.2.2.3.2 Axial Strength There is no specific check for axial loads in this procedure. However, axial loads are used in determining the shear strength values (Eqs. [15-1], [15-4], and [15-5]). Also, loss of masonry capacity caused by seismic forces also may result in a loss of gravity carrying support. Therefore, the design professional should be aware of any heavily loaded walls during the evaluation.

15.2.3 Analysis

15.2.3.1 Cross Walls

15.2.3.1.1 General Only wood-framed walls sheathed with materials listed in Table 15-1 may be considered as cross walls. Cross walls shall not be spaced more than 40 ft on center, measured perpendicular to the direction under consideration, and should be present in each story of the building. Cross walls shall extend the full story height between diaphragms. Cross walls shall have a length-to-height ratio between openings equal to or greater than 1.5.

EXCEPTIONS:

1. Cross walls need not be present at all levels in accordance with Section 15.2.3.2.2;
2. Cross walls that meet the following requirements need not be continuous:
   - Shear connections and anchorage at all edges of the diaphragm shall meet the requirements of Section 15.2.3.2.6;
   - Cross walls shall have a shear strength of $0.5 S_{X1} \Sigma W_d$ and shall interconnect the diaphragm to the foundation;

Table 15-1. Cross Wall Shear Strengths

Material[a] and Configuration	Seismic Shear Strength[b,c] (lb/ft)
Plaster on wood or metal lath	600
Plaster on gypsum lath	550
Gypsum wallboard, unblocked edges	200
Gypsum wallboard, blocked edges	400
Plywood sheathing applied directly over wood studs	600
Plywood sheathing applied over wood sheathing	600
Plywood sheathing applied over existing plaster	0
Drywall or plaster applied directly over wood studs	230
Drywall or plaster applied to sheathing over existing wood studs	0

[a]Materials shall conform to the existing condition criteria in accordance with Chapter 4.
[b]Shear values are permitted to be combined. However, total combined value shall not exceed 900 lb/ft.
[c]No increase in stress is allowed.

- Diaphragms spanning between cross walls that are continuous shall comply with the following equation:

$$\frac{2.1S_{X1}W_d + V_{ca}}{2v_uD} \leq 2.5 \qquad (15\text{-}6)$$

where S_{X1} = Spectral response acceleration parameter at a 1-s period;
W_d = Total dead load tributary to the diaphragm (lb).
V_{ca} = Total shear strength of cross walls in the direction of analysis immediately above the diaphragm level being evaluated (lb);
v_u = Unit shear strength of diaphragm (lb/ft); and
D = Depth of diaphragm (ft).

15.2.3.1.2 Shear Strength Within any 40 ft measured along the span of the diaphragm, the sum of the cross wall shear strengths shall be greater than or equal to 30% of the diaphragm shear strength of the strongest diaphragm at or above the level under consideration. The values in Table 15-1 may be assumed for cross wall strengths for the purposes of this procedure.

15.2.3.2 Diaphragms

15.2.3.2.1 Shear Strength The values in Table 15-2 may be assumed for diaphragm strengths for the purposes of this procedure.

15.2.3.2.2 Demand–Capacity Ratios Demand–capacity ratios, DCR, shall be evaluated when S_{D1} exceeds 0.20. Demand–capacity ratios shall be calculated for a diaphragm at any level in accordance with the following equations:

- Diaphragms without cross walls at levels immediately above or below:

$$\text{DCR} = \frac{2.1S_{X1}W_d}{\sum v_uD} \qquad (15\text{-}7)$$

Table 15-2. Diaphragm Shear Strengths

Material[a] and Configuration	Seismic Shear Strength (lb/ft)
Roofs with straight sheathing and roofing applied directly to sheathing	300
Roofs with diagonal sheathing and roofing applied directly to sheathing	750
Floors with straight tongue-and-groove sheathing	300
Floors with straight sheathing and finished wood flooring with board edges offset or perpendicular	1,500
Floors with diagonal sheathing and finished wood flooring	1,800
Metal deck[b]	1,800
Metal deck welded for seismic resistance[c]	3,000
Plywood sheathing applied directly over existing straight sheathing with ends of plywood sheets bearing on joists or rafters and edges of plywood located on center of individual sheathing boards	675

NOTES: Values are taken from ABK (ABK 1981).
[a]Materials shall conform to the existing condition criteria in accordance with Chapter 4.
[b]Minimum 22-gauge steel deck with welds to support at a maximum average spacing of 12 in.
[c]Minimum 22-gauge steel deck with ¾-in. diameter plug welds at a maximum average spacing of 8 in. and with sidelap welds, screws, or button punches at a spacing of 24 in. or less.

- Diaphragms in a one-story building with cross walls:

$$\text{DCR} = \frac{2.1S_{X1}W_d}{\sum v_uD + V_{cb}} \qquad (15\text{-}8)$$

- Diaphragms in a multi-story building with cross walls at all levels:

$$\text{DCR} = \frac{2.1S_{X1}\sum W_d}{\sum(\sum v_uD + V_{cb})} \qquad (15\text{-}9)$$

- Roof diaphragms and the diaphragms directly below if coupled by cross walls:

$$\text{DCR} = \frac{2.1S_{X1}\sum W_d}{\sum(\sum v_uD)} \qquad (15\text{-}10)$$

where S_{X1} = Spectral response acceleration parameter at a 1-s period;
W_d = Total dead load tributary to the diaphragm (lb);
V_{cb} = Total shear strength of cross walls in the direction of analysis immediately below the diaphragm level being evaluated (lb);
v_u = Unit shear strength of diaphragm (lb/ft); and
D = Depth of diaphragm (ft).

15.2.3.2.3 Acceptability Criteria The intersection of diaphragm span between walls, L, and the demand–capacity ratio, DCR, shall be located within Region 1, 2, or 3 on Fig. 15-1.

15.2.3.2.4 Chords and Collectors An analysis for diaphragm flexure need not be made, and chords need not be present.

Where walls do not extend the length of the diaphragm, collectors shall be present. The collectors shall be able to transfer diaphragm shears calculated in accordance with Section 15.2.3.2.6 into the shear walls.

15.2.3.2.5 Diaphragm Openings Diaphragm forces at corners of openings shall be investigated.

There shall be sufficient capacity to develop the strength of the diaphragm at opening corners.

The demand–capacity ratio shall be calculated and evaluated in accordance with Sections 15.2.3.2.2 and 15.2.3.2.3 for the portion of the diaphragm adjacent to an opening using the opening dimension as the diaphragm span.

The demand–capacity ratio shall be calculated and evaluated in accordance with Sections 15.2.3.2.2 and 15.2.3.2.3 for openings occurring in the end quarter of the diaphragm span. The diaphragm strength, v_uD, shall be based on the net depth of the diaphragm.

15.2.3.2.6 Diaphragm Shear Transfer Diaphragm shear transfer shall be evaluated when S_{X1} exceeds 0.133. Diaphragms shall be connected to shear walls at each end and shall be able to develop the minimum of the forces calculated in accordance with Eqs. (15-11) and (15-12).

$$V_d = 1.25S_{DX1}C_pW_d \qquad (15\text{-}11)$$

$$V_d = v_uD \qquad (15\text{-}12)$$

where S_{X1} = Spectral response acceleration parameter at a 1-s period;
W_d = Total dead load tributary to diaphragm (lb);
v_u = Unit shear strength of diaphragm (lb/ft);
D = Depth of diaphragm (ft); and
C_p = Horizontal force factor (Table 15-3).

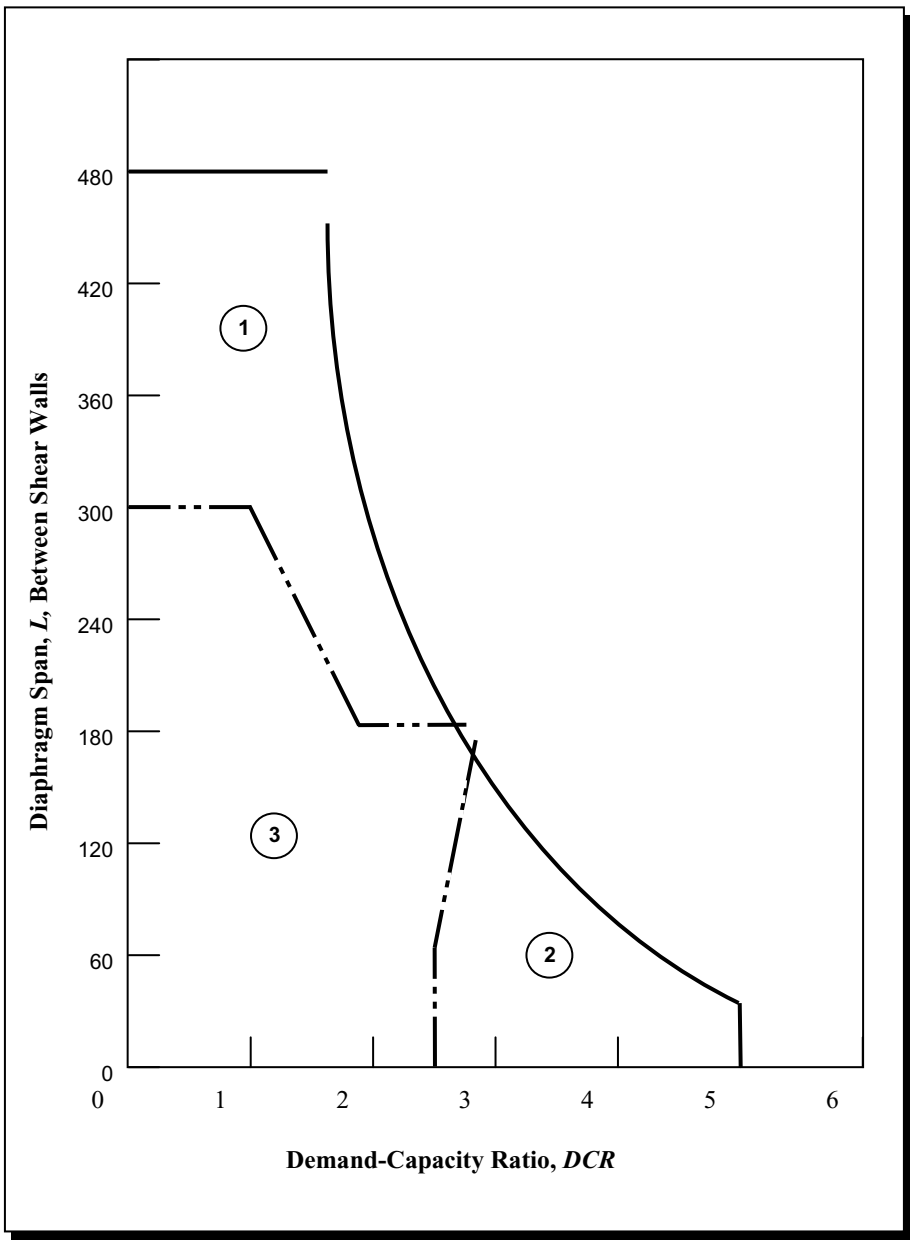

FIG. 15-1. Demand–Capacity Ratio for Diaphragms Between Shear Walls

Table 15-3. Horizontal Force Factor, C_p

Configuration of Materials	C_p
Roofs with straight or diagonal sheathing and roofing applied directly to the sheathing, or floors with straight tongue-and-groove sheathing	0.50
Diaphragm with double or multiple layers of boards with edges offset, and blocked structural panel systems	0.75

15.2.3.3 Shear Walls

15.2.3.3.1 Shear Wall Actions In-plane shear shall be evaluated when S_{X1} exceeds 0.133. The story force distributed to a shear wall at any diaphragm level shall be determined in accordance with the following equations:

For buildings without cross walls:

$$F_{wx} = 0.8S_{X1}(W_{wx} + 0.5W_d) \tag{15-13}$$

but not exceeding

$$F_{wx} = 0.8S_{X1}W_{wx} + v_u D \tag{15-14}$$

For buildings with cross walls in all levels:

$$F_{wx} = 0.75S_{X1}(W_{wx} + 0.5W_d) \tag{15-15}$$

but need not exceed

$$F_{wx} = 0.75S_{X1}\left\{W_{wx} + \Sigma W_d\left[\frac{v_u D}{\Sigma(\Sigma v_u D)}\right]\right\} \tag{15-16}$$

and need not exceed

$$F_{wx} = 0.75 S_{X1} W_{wx} + v_u D \tag{15-17}$$

The wall story shear shall be calculated in accordance with Eq. (15-18).

$$V_{wx} = \Sigma F_{wx} \tag{15-18}$$

where S_{X1} = Spectral response acceleration parameter at a 1-s period;
W_{wx} = Dead load of an unreinforced masonry wall assigned to level x, taken from mid-story below level x to mid-story above level x (lb);
W_d = Total dead load tributary to the diaphragm (lb);
v_u = Unit shear strength of diaphragm (lb/ft); and
D = Depth of diaphragm (ft).

15.2.3.3.2 Shear Wall Strengths The shear wall strength shall be calculated in accordance with Eq. (15-19):

$$V_a = 0.67 v_{me} D t \tag{15-19}$$

where v_{me} = Expected masonry shear strength (lb/in.^{2}) calculated in accordance with Section 15.2.2.3.1;
D = In-plane width dimension of masonry (in.); and
t = Thickness of wall (in.).

The wall or pier rocking shear strength shall be calculated in accordance with Eqs. (15-20) and (15-21):

For walls without openings:

$$V_r = 0.9(P_D + 0.5 P_w)\frac{D}{H} \tag{15-20}$$

For walls with openings:

$$V_r = 0.9 P_D \frac{D}{H} \tag{15-21}$$

where P_D = Superimposed dead load at the top of the pier under consideration (lb);
P_W = Weight of wall (lb);
D = In-plane width dimension of masonry (in.); and
H = Least clear height of opening on either side of pier (in.).

15.2.3.3.3 Shear Wall Acceptance Criteria The acceptability of unreinforced masonry shear walls shall be determined in accordance with Eqs. (15-22), (15-23), and (15-24).

When $V_r < V_a$

$$0.7 V_{wx} < \Sigma V_r \tag{15-22}$$

When $V_a < V_r$, V_{wx} shall be distributed to the individual wall piers, V_p, in proportion to D/H, and Eqs. (15-22) and (15-23) shall be met.

$$V_p < V_a \tag{15-23}$$

$$V_p < V_r \tag{15-24}$$

If $V_p < V_a$ and $V_p > V_r$ for any pier, the pier shall be omitted from the analysis and the procedure shall be repeated.

15.2.3.4 Out-of-Plane Demands Out-of-plane demands shall be evaluated when S_{X1} exceeds 0.133. The unreinforced masonry wall height-to-thickness ratios shall be less than those set forth in Table 15-4.

Table 15-4. Allowable Height-to-Thickness Ratios of Unreinforced Masonry Walls

Wall Type	$0.13 \le S_{X1} < 0.25$	$0.25 \le S_{X1} < 0.4$	$S_{X1} \ge 0.4$ A	$S_{X1} \ge 0.4$ B
Walls of one-story buildings	20	16	16[a,b]	13
Top story of multi-story building	14	14	14[a,b]	9
First story of multi-story building	20	18	16	15
All other conditions	20	16	16	13

[a]Value may be used when in-plane shear tests in accordance with Section 15.2.2.2.1 have a minimum v_{te} of 100 lb/in.^{2} or a minimum v_{te} of 60 lb/in.^{2} and a minimum of 50% mortar coverage of the collar joint.
[b]Values may be interpolated between columns A and B where in-plane shear tests in accordance with Section 15.2.2.2.1 have a v_{te} of between 30 and 60 lb/in.^{2} and a minimum of 50% mortar coverage of the collar joint.

The following limitations shall apply to Table 15-4 when S_{X1} exceeds 0.4:

- For buildings within Region 1 of Fig. 15-1 as defined in Section 15.2.3.2.3, height-to-thickness ratios in column A of Table 15-4 may be used if cross walls comply with the requirements of Section 15.2.3.1 and are present in all stories.
- For buildings within Region 2 of Fig. 15-1, as defined in Section 15.2.3.2.3, height-to-thickness ratios in column A may be used.
- For buildings within Region 3 of Fig. 15-1, as defined in Section 15.2.3.2.3, height-to-thickness ratios in column B may be used.

15.2.3.5 Wall Anchorage Wall anchorage shall be evaluated when S_{X1} exceeds 0.067. Anchors shall be capable of developing the maximum of the following: $2.1 S_{X1}$ times the weight of the wall, or 200 lb/ft, acting normal to the wall at the level of the floor or roof.

Walls shall be anchored at the roof, and all floor levels at a spacing equal to or less than 6 ft on center.

At the roof and all floor levels, anchors shall be provided within 2 ft horizontally from the inside corners of the wall.

The connection between the walls and the diaphragm shall not induce cross-grain bending or tension in the wood ledgers.

15.2.3.6 Buildings with Open Fronts Single-story buildings with an open front on one side shall have cross walls parallel to the open front. The effective diaphragm span, L_i, for use in Fig. 15-1, shall be calculated in accordance with Eq. (15-25).

$$L_i = 2L\left(\frac{W_w}{W_d} + 1\right) \tag{15-25}$$

where L = Span of diaphragm between shear wall and open front (ft);
W_w = Total weight of wall above open front; and
W_d = Total dead load tributary to the diaphragm (lb).

The diaphragm demand–capacity ratio, DCR, shall be calculated in accordance with Eq. (15-26):

$$\text{DCR} = \frac{2.1 S_{X1}(W_d + W_w)}{(v_u D + V_{cb})} \tag{15-26}$$

where S_{X1} = Spectral response acceleration parameter at a 1-s period;
v_u = Unit shear strength of diaphragm (lb/ft);
D = Depth of diaphragm (ft);
V_{cb} = Total shear strength of cross walls in the direction of analysis immediately below the diaphragm level being evaluated (lb);
W_w = Total weight of wall above open front; and
W_d = Total dead load tributary to the diaphragm (lb).

15.2.3.7 Truss and Beam Supports Where S_{X1} is greater than 0.3 g and where trusses and beams other than rafters or joists are supported on masonry, independent secondary columns or equivalent components shall be installed to support vertical loads of the roof or floor members.

CHAPTER 16
TIER 1 CHECKLISTS

16.1 BASIC CHECKLISTS

16.1.1 Very Low Seismicity Checklist This Very Low Seismicity Checklist shall be completed for all building types in Very Low Seismicity being evaluated to the Life Safety Performance Level only. Tier 1 screening shall include on-site investigation and condition assessment as required by Section 4.2.1.

Each of the evaluation statements in this checklist shall be marked Compliant (C), Noncompliant (NC), Unknown (U), or Not Applicable (N/A) for a Tier 1 screening. Compliant statements identify issues that are acceptable according to the criteria of this standard, whereas noncompliant and unknown statements identify issues that require further investigation. Certain statements may not apply to the building being evaluated. For noncompliant and unknown evaluation statements, the design professional may choose to conduct further investigation using the corresponding Tier 2 evaluation procedure; corresponding section numbers are in parentheses after each evaluation statement.

C16.1.1 Very Low Seismicity Checklist The evaluation statements provided represent all of the required statements for buildings in Very Low Seismicity being evaluated for Life Safety, including structural and nonstructural. The statements in the Very Low Seismicity Checklist section need not be completed for buildings in Low, Moderate, and High Seismicity and for buildings in Very Low Seismicity being evaluated for Immediate Occupancy Performance Level because those statements are repeated where appropriate in the Basic Configuration Checklist, the building type checklists, and the nonstructural checklists.

The section numbers in parentheses after each evaluation statement refer to the commentary in Appendix A regarding the statement's purpose and the corresponding Tier 2 evaluation procedures. If additional information on the evaluation statement is required, refer to the commentary in the Tier 2 procedure for that evaluation statement.

Structural Components LOAD PATH: The structure shall contain a complete, well-defined load path, including structural elements and connections, that serves to transfer the inertial forces associated with the mass of all elements of the building to the foundation. (Commentary: Sec. A.2.1.1. Tier 2: Sec. 5.4.1.1)

WALL ANCHORAGE: Exterior concrete or masonry walls that are dependent on the diaphragm for lateral support are anchored for out-of-plane forces at each diaphragm level with steel anchors, reinforcing dowels, or straps that are developed into the diaphragm. Connections shall have adequate strength to resist the connection force calculated in the Quick Check procedure of Section 4.5.3.7. (Commentary: Sec. A.5.1.1. Tier 2: Sec. 5.7.1.1)

16.1.2LS Life Safety Basic Configuration Checklist This Basic Configuration Checklist shall be completed for all building types, except buildings in Very Low Seismicity, being evaluated to the Life Safety Performance Level. Once this checklist has been completed, complete the appropriate building type checklist for the desired Performance Level as shown in Table 4-7. Tier 1 screening shall include on-site investigation and condition assessment as required by Section 4.2.1.

Each of the evaluation statements in this checklist shall be marked Compliant (C), Noncompliant (NC), Unknown (U), or Not Applicable (N/A) for a Tier 1 screening. Compliant statements identify issues that are acceptable according to the criteria of this standard, whereas noncompliant and unknown statements identify issues that require further investigation. Certain statements may not apply to the buildings being evaluated. For noncompliant and unknown evaluation statements, the design professional may choose to conduct further investigation using the corresponding Tier 2 evaluation procedure; corresponding section numbers are in parentheses after each evaluation statement.

C16.1.2LS Life Safety Basic Configuration Checklist For buildings in Low, Moderate, and High Seismicity, the following evaluation statements represent general configuration issues applicable for most buildings based on observed structural damage during actual earthquakes. This checklist should be completed for all buildings in Low, Moderate, and High Seismicity for Life Safety Performance Level.

The section numbers in parentheses after each evaluation statement refer to the commentary in Appendix A regarding the statement's purpose and the corresponding Tier 2 evaluation procedures. If additional information on the evaluation statement is required, refer to the Commentary in the Tier 2 procedure for that evaluation statement.

Low Seismicity

Building System

General LOAD PATH: The structure shall contain a complete, well-defined load path, including structural elements and connections, that serves to transfer the inertial forces associated with the mass of all elements of the building to the foundation. (Commentary: Sec. A.2.1.1. Tier 2: Sec. 5.4.1.1)

ADJACENT BUILDINGS: The clear distance between the building being evaluated and any adjacent building is greater than 4% of the height of the shorter building. This statement shall not apply for the following building types: W1, W1a, and W2. (Commentary: Sec. A.2.1.2. Tier 2: Sec. 5.4.1.2)

MEZZANINES: Interior mezzanine levels are braced independently from the main structure or are anchored to the seismic-

force-resisting elements of the main structure. (Commentary: Sec. A.2.1.3. Tier 2: Sec. 5.4.1.3)

Building Configuration WEAK STORY: The sum of the shear strengths of the seismic-force-resisting system in any story in each direction is not less than 80% of the strength in the adjacent story above. (Commentary: Sec. A2.2.2. Tier 2: Sec. 5.4.2.1)

SOFT STORY: The stiffness of the seismic-force-resisting system in any story is not less than 70% of the seismic-force-resisting system stiffness in an adjacent story above or less than 80% of the average seismic-force-resisting system stiffness of the three stories above. (Commentary: Sec. A.2.2.3. Tier 2: Sec. 5.4.2.2)

VERTICAL IRREGULARITIES: All vertical elements in the seismic-force-resisting system are continuous to the foundation. (Commentary: Sec. A.2.2.4. Tier 2: Sec. 5.4.2.3)

GEOMETRY: There are no changes in the net horizontal dimension of the seismic-force-resisting system of more than 30% in a story relative to adjacent stories, excluding one-story penthouses and mezzanines. (Commentary: Sec. A.2.2.5. Tier 2: Sec. 5.4.2.4)

MASS: There is no change in effective mass more than 50% from one story to the next. Light roofs, penthouses, and mezzanines need not be considered. (Commentary: Sec. A.2.2.6. Tier 2: Sec. 5.4.2.5)

TORSION: The estimated distance between the story center of mass and the story center of rigidity is less than 20% of the building width in either plan dimension. (Commentary: Sec. A.2.2.7. Tier 2: Sec. 5.4.2.6)

Moderate Seismicity (Complete the Following Items in Addition to the Items for Low Seismicity)

Geologic Site Hazards LIQUEFACTION: Liquefaction-susceptible, saturated, loose granular soils that could jeopardize the building's seismic performance shall not exist in the foundation soils at depths within 50 ft under the building. (Commentary: Sec. A.6.1.1. Tier 2: 5.4.3.1)

SLOPE FAILURE: The building site is sufficiently remote from potential earthquake-induced slope failures or rockfalls to be unaffected by such failures or is capable of accommodating any predicted movements without failure. (Commentary: Sec. A.6.1.2. Tier 2: 5.4.3.1)

SURFACE FAULT RUPTURE: Surface fault rupture and surface displacement at the building site are not anticipated. (Commentary: Sec. A.6.1.3. Tier 2: 5.4.3.1)

High Seismicity (Complete the Following Items in Addition to the Items for Low and Moderate Seismicity)

Foundation Configuration OVERTURNING: The ratio of the least horizontal dimension of the seismic-force-resisting system at the foundation level to the building height (base/height) is greater than $0.6S_a$. (Commentary: Sec. A.6.2.1. Tier 2: Sec. 5.4.3.3)

TIES BETWEEN FOUNDATION ELEMENTS: The foundation has ties adequate to resist seismic forces where footings, piles, and piers are not restrained by beams, slabs, or soils classified as Site Class A, B, or C. (Commentary: Sec. A.6.2.2. Tier 2: Sec. 5.4.3.4)

16.1.2IO Immediate Occupancy Basic Configuration Checklist This Basic Configuration Checklist shall be completed for all building types being evaluated to the Immediate Occupancy Performance Level. Once this checklist has been completed, complete the appropriate building type checklist for the desired Performance Level as shown in Table 4-7. Tier 1 screening shall include on-site investigation and condition assessment as required by Section 4.2.1.

Each of the evaluation statements in this checklist shall be marked Compliant (C), Noncompliant (NC), Unknown (U), or Not Applicable (N/A) for a Tier 1 screening. Compliant statements identify issues that are acceptable according to the criteria of this standard, whereas noncompliant and unknown statements identify issues that require further investigation. Certain statements may not apply to the buildings being evaluated. For noncompliant and unknown evaluation statements, the design professional may choose to conduct further investigation using the corresponding Tier 2 evaluation procedure; corresponding section numbers are in parentheses after each evaluation statement.

C16.1.2IO Immediate Occupancy Basic Configuration Checklist The evaluation statements represent general configuration issues applicable for most buildings based on observed earthquake structural damage during actual earthquakes. This checklist should be completed for all buildings in Very Low, Low, Moderate, and High Seismicity for Immediate Occupancy Performance Levels.

The section numbers in parentheses after each evaluation statement refer to the Commentary in Appendix A regarding the statement's purpose and the corresponding Tier 2 evaluation procedures. If additional information on the evaluation statement is required, refer to the Commentary in the Tier 2 procedure for that evaluation statement.

Very Low Seismicity

Building System

General LOAD PATH: The structure shall contain a complete, well-defined load path, including structural elements and connections, that serves to transfer the inertial forces associated with the mass of all elements of the building to the foundation. (Commentary: Sec. A.2.1.1. Tier 2: Sec. 5.4.1.1)

ADJACENT BUILDINGS: The clear distance between the building being evaluated and any adjacent building is greater than 4% of the height of the shorter building. This statement need not apply for the following building types: W1, W1a, and W2. (Commentary: Sec. A.2.1.2. Tier 2: Sec. 5.4.1.2)

MEZZANINES: Interior mezzanine levels are braced independently from the main structure or are anchored to the seismic-force-resisting elements of the main structure. (Commentary: Sec. A.2.1.3. Tier 2: Sec. 5.4.1.3)

Building Configuration WEAK STORY: The sum of the shear strengths of the seismic-force-resisting system in any story in each direction shall not be less than 80% of the strength in the adjacent story above. (Commentary: Sec. A.2.2.2. Tier 2: Sec. 5.4.2.1)

SOFT STORY: The stiffness of the seismic-force-resisting system in any story shall not be less than 70% of the seismic-force-resisting system stiffness in an adjacent story above or less than 80% of the average seismic-force-resisting system stiffness of the three stories above. (Commentary: Sec. A.2.2.3. Tier 2: Sec. 5.4.2.2)

VERTICAL IRREGULARITIES: All vertical elements in the seismic-force-resisting system are continuous to the foundation. (Commentary: Sec. A.2.2.4. Tier 2: Sec. 5.4.2.3)

GEOMETRY: There are no changes in the net horizontal dimension of the seismic-force-resisting system of more than 30% in a story relative to adjacent stories, excluding one-story

penthouses and mezzanines. (Commentary: Sec. A.2.2.5. Tier 2: Sec. 5.4.2.4)

MASS: There is no change in effective mass more than 50% from one story to the next. Light roofs, penthouses, and mezzanines need not be considered. (Commentary: Sec. A.2.2.6. Tier 2: Sec. 5.4.2.5)

TORSION: The estimated distance between the story center of mass and the story center of rigidity is less than 20% of the building width in either plan dimension. (Commentary: Sec. A.2.2.7. Tier 2: Sec. 5.4.2.6)

Low Seismicity (Complete the Following Items in Addition to the Items for Very Low Seismicity)

Geologic Site Hazards LIQUEFACTION: Liquefaction-susceptible, saturated, loose granular soils that could jeopardize the building's seismic performance shall not exist in the foundation soils at depths within 50 ft under the building. (Commentary: Sec. A.6.1.1. Tier 2: 5.4.3.1)

SLOPE FAILURE: The building site is sufficiently remote from potential earthquake-induced slope failures or rockfalls to be unaffected by such failures or is capable of accommodating any predicted movements without failure. (Commentary: Sec. A.6.1.2. Tier 2: 5.4.3.1)

SURFACE FAULT RUPTURE: Surface fault rupture and surface displacement at the building site are not anticipated. (Commentary: Sec. A.6.1.3. Tier 2: 5.4.3.1)

Moderate and High Seismicity (Complete the Following Items in Addition to the Items for Low Seismicity)

Foundation Configuration OVERTURNING: The ratio of the least horizontal dimension of the seismic-force-resisting system at the foundation level to the building height (base/height) is greater than $0.6S_a$. (Commentary: Sec. A.6.2.1. Tier 2: Sec. 5.4.3.3)

TIES BETWEEN FOUNDATION ELEMENTS: The foundation has ties adequate to resist seismic forces where footings, piles, and piers are not restrained by beams, slabs, or soils classified as Site Class A, B, or C. (Commentary: Sec. A.6.2.2. Tier 2: Sec. 5.4.3.4)

16.2LS LIFE SAFETY STRUCTURAL CHECKLIST FOR BUILDING TYPES W1: WOOD LIGHT FRAMES AND W1A: MULTI-STORY, MULTI-UNIT RESIDENTIAL WOOD FRAME

This Life Safety Structural Checklist shall be completed where required by Table 4-7 and where the building configuration complies with the description of W1 and W1a building types defined in Table 3-1. Tier 1 screening shall include on-site investigation and condition assessment as required by Section 4.2.1.

Each of the evaluation statements in this checklist shall be marked Compliant (C), Noncompliant (NC), Not Applicable (N/A), or Unknown (U) for a Tier 1 screening. Compliant statements identify issues that are acceptable according to the criteria of this standard, whereas noncompliant and unknown statements identify issues that require further investigation. Certain statements may not apply to the buildings being evaluated. For noncompliant and unknown evaluation statements, the design professional may choose to conduct further investigation using the corresponding Tier 2 evaluation procedure; corresponding section numbers are in parentheses after each evaluation statement.

C16.2LS LIFE SAFETY STRUCTURAL CHECKLIST FOR BUILDING TYPES W1: WOOD LIGHT FRAMES AND W1A: MULTI-STORY, MULTI-UNIT RESIDENTIAL WOOD FRAME

Building Type W1: Wood Light Frames These buildings are single- or multiple-family dwellings one or more stories high. Building loads are light, and the framing spans are short. Floor and roof framing consists of wood joists or rafters on wood studs spaced no more than 24 in. apart. The first floor framing is supported directly on the foundation or is raised up on cripple studs and post-and-beam supports. The foundation consists of spread footings constructed on concrete, concrete masonry block, brick masonry or even wood in older construction. Chimneys, where present, consist of solid brick masonry, masonry veneer, or wood frame with internal metal flues. Seismic forces are resisted by wood frame diaphragms and shear walls. Floor and roof diaphragms consist of straight or diagonal lumber sheathing, tongue-and-groove planks, oriented strand board, or plywood. Shear walls consist of straight or diagonal lumber sheathing, plank siding, plywood, oriented strand board, stucco, gypsum board, particle board, or fiberboard. Interior partitions are sheathed with plaster or gypsum board.

Building Type W1a: Multi-Story, Multi-Unit Residential Wood Frame These buildings are multi-story, similar in construction to W1 buildings, but have plan areas on each floor typically greater than 3,000 ft^2. Older construction often has open-front garages at the lowest story.

Low and Moderate Seismicity

Seismic-Force-Resisting System REDUNDANCY: The number of lines of shear walls in each principal direction is greater than or equal to 2. (Commentary: Sec. A.3.2.1.1. Tier 2: Sec. 5.5.1.1)

SHEAR STRESS CHECK: The shear stress in the shear walls, calculated using the Quick Check procedure of Section 4.5.3.3, is less than the following values (Commentary: Sec. A.3.2.7.1. Tier 2: Sec. 5.5.3.1.1):

Structural panel sheathing	1,000 lb/ft
Diagonal sheathing	700 lb/ft
Straight sheathing	100 lb/ft
All other conditions	100 lb/ft

STUCCO (EXTERIOR PLASTER) SHEAR WALLS: Multi-story buildings do not rely on exterior stucco walls as the primary seismic-force-resisting system. (Commentary: Sec. A.3.2.7.2. Tier 2: Sec. 5.5.3.6.1)

GYPSUM WALLBOARD OR PLASTER SHEAR WALLS: Interior plaster or gypsum wallboard are not used as shear walls on buildings more than one story high with the exception of the uppermost level of a multi-story building. (Commentary: Sec. A.3.2.7.3. Tier 2: Sec. 5.5.3.6.1)

NARROW WOOD SHEAR WALLS: Narrow wood shear walls with an aspect ratio greater than 2-to-1 are not used to resist seismic forces. (Commentary: Sec. A.3.2.7.4. Tier 2: Sec. 5.5.3.6.1)

WALLS CONNECTED THROUGH FLOORS: Shear walls have an interconnection between stories to transfer overturning and shear forces through the floor. (Commentary: Sec. A.3.2.7.5. Tier 2: Sec. 5.5.3.6.2)

HILLSIDE SITE: For structures that are taller on at least one side by more than one-half story because of a sloping site, all shear walls on the downhill slope have an aspect ratio less than 1-to-1. (Commentary: Sec. A.3.2.7.6. Tier 2: Sec. 5.5.3.6.3)

CRIPPLE WALLS: Cripple walls below first-floor-level shear walls are braced to the foundation with wood structural panels. (Commentary: Sec. A.3.2.7.7. Tier 2: Sec. 5.5.3.6.4)

OPENINGS: Walls with openings greater than 80% of the length are braced with wood structural panel shear walls with aspect ratios of not more than 1.5-to-1 or are supported by adjacent construction through positive ties capable of transferring the seismic forces. (Commentary: Sec. A.3.2.7.8. Tier 2: Sec. 5.5.3.6.5)

Connections WOOD POSTS: There is a positive connection of wood posts to the foundation. (Commentary: Sec. A.5.3.3. Tier 2: Sec. 5.7.3.3)

WOOD SILLS: All wood sills are bolted to the foundation. (Commentary: Sec. A.5.3.4. Tier 2: Sec. 5.7.3.3)

GIRDER/COLUMN CONNECTION: There is a positive connection using plates, connection hardware, or straps between the girder and the column support. (Commentary: Sec. A.5.4.1. Tier 2: Sec. 5.7.4.1)

High Seismicity (Complete the Following Items in Addition to the Items for Low and Moderate Seismicity)

Connections WOOD SILL BOLTS: Sill bolts are spaced at 6 ft or less with proper edge and end distance provided for wood and concrete. (Commentary: Sec. A.5.3.7. Tier 2: Sec. 5.7.3.3)

Diaphragms DIAPHRAGM CONTINUITY: The diaphragms are not composed of split-level floors and do not have expansion joints. (Commentary: Sec. A.4.1.1. Tier 2: Sec. 5.6.1.1)

ROOF CHORD CONTINUITY: All chord elements are continuous, regardless of changes in roof elevation. (Commentary: Sec. A.4.1.3. Tier 2: Sec. 5.6.1.1)

STRAIGHT SHEATHING: All straight sheathed diaphragms have aspect ratios less than 2-to-1 in the direction being considered. (Commentary: Sec. A.4.2.1. Tier 2: Sec. 5.6.2)

SPANS: All wood diaphragms with spans greater than 24 ft consist of wood structural panels or diagonal sheathing. (Commentary: Sec. A.4.2.2. Tier 2: Sec. 5.6.2)

DIAGONALLY SHEATHED AND UNBLOCKED DIAPHRAGMS: All diagonally sheathed or unblocked wood structural panel diaphragms have horizontal spans less than 40 ft and shall have aspect ratios less than or equal to 4-to-1. (Commentary: Sec. A.4.2.3. Tier 2: Sec. 5.6.2)

OTHER DIAPHRAGMS: The diaphragms do not consist of a system other than wood, metal deck, concrete, or horizontal bracing. (Commentary: Sec. A.4.7.1. Tier 2: Sec. 5.6.5)

16.2IO IMMEDIATE OCCUPANCY STRUCTURAL CHECKLIST FOR BUILDING TYPES W1: WOOD LIGHT FRAMES AND W1A: MULTI-STORY, MULTI-UNIT RESIDENTIAL WOOD FRAME

This Immediate Occupancy Structural Checklist shall be completed where required by Table 4-7 and where the building configuration complies with the description of W1 or W1a building types defined in Table 3-1. Tier 1 screening shall include on-site investigation and condition assessment as required by Section 4.2.1.

Each of the evaluation statements in this checklist shall be marked Compliant (C), Noncompliant (NC), Not Applicable (N/A), or Unknown (U) for a Tier 1 screening. Compliant statements identify issues that are acceptable according to the criteria of this standard, whereas noncompliant and unknown statements identify issues that require further investigation. Certain statements may not apply to the buildings being evaluated. For noncompliant and unknown evaluation statements, the design professional may choose to conduct further investigation using the corresponding Tier 2 evaluation procedure; corresponding section numbers are in parentheses after each evaluation statement.

C16.2IO IMMEDIATE OCCUPANCY STRUCTURAL CHECKLIST FOR BUILDING TYPES W1: WOOD LIGHT FRAMES AND W1A: MULTI-STORY, MULTI-UNIT RESIDENTIAL WOOD FRAME

Building Type W1: Wood Light Frames These buildings are single- or multiple-family dwellings one or more stories high. Building loads are light, and the framing spans are short. Floor and roof framing consists of wood joists or rafters on wood studs spaced no more than 24 in. apart. The first floor framing is supported directly on the foundation or is raised up on cripple studs and post-and-beam supports. The foundation consists of spread footings constructed on concrete, concrete masonry block, brick masonry, or even wood in older construction. Chimneys, where present, consist of solid brick masonry, masonry veneer, or wood frame with internal metal flues. Seismic forces are resisted by wood frame diaphragms and shear walls. Floor and roof diaphragms consist of straight or diagonal lumber sheathing, tongue-and-groove planks, oriented strand board, or plywood. Shear walls consist of straight or diagonal lumber sheathing, plank siding, plywood, oriented strand board, stucco, gypsum board, particle board, or fiberboard. Interior partitions are sheathed with plaster or gypsum board.

Building Type W1a: Multi-Story, Multi-Unit Residential Wood Frame These buildings are multi-story, similar in construction to W1 buildings, but have plan areas on each floor typically greater than 3,000 ft^2. Older construction often has open-front garages at the lowest story.

Very Low Seismicity

Seismic-Force-Resisting System REDUNDANCY: The number of lines of shear walls in each principal direction is greater than or equal to 2. (Commentary: Sec. A.3.2.1.1. Tier 2: Sec. 5.5.1.1)

SHEAR STRESS CHECK: The shear stress in the shear walls, calculated using the Quick Check procedure of Section 4.5.3.3, is less than the following values (Commentary: Sec. A.3.2.7.1. Tier 2: Sec. 5.5.3.1.1):

Structural panel sheathing	1,000 lb/ft
Diagonal sheathing	700 lb/ft
Straight sheathing	100 lb/ft
All other conditions	100 lb/ft

STUCCO (EXTERIOR PLASTER) SHEAR WALLS: Multi-story buildings do not rely on exterior stucco walls as the primary seismic-force-resisting system. (Commentary: Sec. A.3.2.7.2. Tier 2: Sec. 5.5.3.6.1)

GYPSUM WALLBOARD OR PLASTER SHEAR WALLS: Interior plaster or gypsum wallboard are not used as shear walls on buildings more than one story high with the exception of the uppermost level of a multi-story building. (Commentary: Sec. A.3.2.7.3. Tier 2: Sec. 5.5.3.6.1)

NARROW WOOD SHEAR WALLS: Narrow wood shear walls with an aspect ratio greater than 2-to-1 are not used to resist seismic forces. (Commentary: Sec. A.3.2.7.4. Tier 2: Sec. 5.5.3.6.1)

WALLS CONNECTED THROUGH FLOORS: Shear walls have an interconnection between stories to transfer overturning and shear forces through the floor. (Commentary: Sec. A.3.2.7.5. Tier 2: Sec. 5.5.3.6.2)

HILLSIDE SITE: For structures that are taller on at least one side by more than one-half story because of a sloping site, all shear walls on the downhill slope have an aspect ratio less than 1 to 2. (Commentary: Sec. A.3.2.7.6. Tier 2: Sec. 5.5.3.6.3)

CRIPPLE WALLS: Cripple walls below first-floor-level shear walls are braced to the foundation with wood structural panels. (Commentary: Sec. A.3.2.7.7. Tier 2: Sec. 5.5.3.6.4)

OPENINGS: Walls with openings greater than 80% of the length are braced with wood structural panel shear walls with aspect ratios of not more than 1.5-to-1 or are supported by adjacent construction through positive ties capable of transferring the seismic forces. (Commentary: Sec. A.3.2.7.8. Tier 2: Sec. 5.5.3.6.5)

Connections WOOD POSTS: There is a positive connection of wood posts to the foundation. (Commentary: Sec. A.5.3.3. Tier 2: Sec. 5.7.3.3)

WOOD SILLS: All wood sills are bolted to the foundation. (Commentary: Sec. A.5.3.4. Tier 2: Sec. 5.7.3.3)

GIRDER/COLUMN CONNECTION: There is a positive connection using plates, connection hardware, or straps between the girder and the column support. (Commentary: Sec. A.5.4.1. Tier 2: Sec. 5.7.4.1)

Foundation System DEEP FOUNDATIONS: Piles and piers are capable of transferring the lateral forces between the structure and the soil. (Commentary: Sec. A.6.2.3.)

SLOPING SITES: The difference in foundation embedment depth from one side of the building to another shall not exceed one story high. (Commentary: Sec. A.6.2.4)

Low, Moderate, and High Seismicity (Complete the Following Items in Addition to the Items for Very Low Seismicity)

Seismic-Force-Resisting System HOLD-DOWN ANCHORS: All shear walls have hold-down anchors, constructed per acceptable construction practices, attached to the end studs. (Commentary: Sec. A.3.2.7.9. Tier 2: Sec. 5.5.3.6.6)

NARROW WOOD SHEAR WALLS: Narrow wood shear walls with an aspect ratio greater than 1.5-to-1 are not used to resist seismic forces. (Commentary: Sec. A.3.2.7.4. Tier 2: Sec. 5.5.3.6.1)

Diaphragms DIAPHRAGM CONTINUITY: The diaphragms are not composed of split-level floors and do not have expansion joints. (Commentary: Sec. A.4.1.1. Tier 2: Sec. 5.6.1.1)

ROOF CHORD CONTINUITY: All chord elements are continuous, regardless of changes in roof elevation. (Commentary: Sec. A.4.1.3. Tier 2: Sec. 5.6.1.1)

PLAN IRREGULARITIES: There is tensile capacity to develop the strength of the diaphragm at reentrant corners or other locations of plan irregularities. (Commentary: Sec. A.4.1.7. Tier 2: Sec. 5.6.1.4)

DIAPHRAGM REINFORCEMENT AT OPENINGS: There is reinforcing around all diaphragm openings larger than 50% of the building width in either major plan dimension. (Commentary: Sec. A.4.1.8. Tier 2: Sec. 5.6.1.5)

STRAIGHT SHEATHING: All straight sheathed diaphragms have aspect ratios less than 1-to-1 in the direction being considered. (Commentary: Sec. A.4.2.1. Tier 2: Sec. 5.6.2)

SPANS: All wood diaphragms with spans greater than 12 ft consist of wood structural panels or diagonal sheathing. (Commentary: Sec. A.4.2.2. Tier 2: Sec. 5.6.2)

DIAGONALLY SHEATHED AND UNBLOCKED DIAPHRAGMS: All diagonally sheathed or unblocked wood structural panel diaphragms have horizontal spans less than 30 ft and aspect ratios less than or equal to 3-to-1 ft. (Commentary: Sec. A.4.2.3. Tier 2: Sec. 5.6.2)

OTHER DIAPHRAGMS: The diaphragm does not consist of a system other than wood, metal deck, concrete, or horizontal bracing. (Commentary: Sec. A.4.7.1. Tier 2: Sec. 5.6.5)

Connections WOOD SILL BOLTS: Sill bolts are spaced at 4 ft or less, with proper edge and end distance provided for wood and concrete. (Commentary: Sec. A.5.3.7. Tier 2: Sec. 5.7.3.3)

16.3LS LIFE SAFETY STRUCTURAL CHECKLIST FOR BUILDING TYPE W2: WOOD FRAMES, COMMERCIAL AND INDUSTRIAL

This Life Safety Structural Checklist shall be completed where required by Table 4-7 and where the building configuration complies with the description of W2 building type defined in Table 3-1. Tier 1 screening shall include on-site investigation and condition assessment as required by Section 4.2.1.

Each of the evaluation statements in this checklist shall be marked Compliant (C), Noncompliant (NC), Not Applicable (N/A), or Unknown (U) for a Tier 1 screening. Compliant statements identify issues that are acceptable according to the criteria of this standard, whereas noncompliant and unknown statements identify issues that require further investigation. Certain statements may not apply to the buildings being evaluated. For noncompliant and unknown evaluation statements, the design professional may choose to conduct further investigation using the corresponding Tier 2 evaluation procedure; corresponding section numbers are in parentheses after each evaluation statement.

C16.3 LIFE SAFETY STRUCTURAL CHECKLIST FOR BUILDING TYPE W2: WOOD FRAMES, COMMERCIAL AND INDUSTRIAL

These buildings are commercial or industrial buildings with a floor area of 5,000 ft^2 or more. There are few, if any, interior walls. The floor and roof framing consists of wood or steel trusses, glulam or steel beams, and wood posts or steel columns. Seismic forces are resisted by wood diaphragms and exterior stud walls sheathed with plywood, oriented strand board, stucco, plaster, straight or diagonal wood sheathing, or braced with rod bracing. Wall openings for storefronts and garages, where present, are framed by post-and-beam framing.

Low and Moderate Seismicity

Lateral Seismic-Force-Resisting System REDUNDANCY: The number of lines of shear walls in each principal direction is greater than or equal to 2. (Commentary: Sec. A.3.2.1.1. Tier 2: Sec. 5.5.1.1)

SHEAR STRESS CHECK: The shear stress in the shear walls, calculated using the Quick Check procedure of Section 4.5.3.3, is less than the following values (Commentary: Sec. A.3.2.7.1. Tier 2: Sec. 5.5.3.1.1):

Structural panel sheathing	1,000 lb/ft
Diagonal sheathing	700 lb/ft
Straight sheathing	100 lb/ft
All other conditions	100 lb/ft

STUCCO (EXTERIOR PLASTER) SHEAR WALLS: Multi-story buildings do not rely on exterior stucco walls as the primary seismic-force-resisting system. (Commentary: Sec. A.3.2.7.2. Tier 2: Sec. 5.5.3.6.1)

GYPSUM WALLBOARD OR PLASTER SHEAR WALLS: Interior plaster or gypsum wallboard is not used as shear walls on buildings more than one story high with the exception of the uppermost level of a multi-story building. (Commentary: Sec. A.3.2.7.3. Tier 2: Sec. 5.5.3.6.1)

NARROW WOOD SHEAR WALLS: Narrow wood shear walls with an aspect ratio greater than 2-to-1 are not used to resist seismic forces. (Commentary: Sec. A.3.2.7.4. Tier 2: Sec. 5.5.3.6.1)

WALLS CONNECTED THROUGH FLOORS: Shear walls have an interconnection between stories to transfer overturning and shear forces through the floor. (Commentary: Sec. A.3.2.7.5. Tier 2: Sec. 5.5.3.6.2)

HILLSIDE SITE: For structures that are taller on at least one side by more than one-half story because of a sloping site, all shear walls on the downhill slope have an aspect ratio less than 1-to-1. (Commentary: Sec. A.3.2.7.6. Tier 2: Sec. 5.5.3.6.3)

CRIPPLE WALLS: Cripple walls below first-floor-level shear walls are braced to the foundation with wood structural panels. (Commentary: Sec. A.3.2.7.7. Tier 2: Sec. 5.5.3.6.4)

OPENINGS: Walls with openings greater than 80% of the length are braced with wood structural panel shear walls with aspect ratios of not more than 1.5-to-1 or are supported by adjacent construction through positive ties capable of transferring the seismic forces. (Commentary: Sec. A.3.2.7.8. Tier 2: Sec. 5.5.3.6.5)

Connections WOOD POSTS: There is a positive connection of wood posts to the foundation. (Commentary: Sec. A.5.3.3. Tier 2: Sec. 5.7.3.3)

WOOD SILLS: All wood sills are bolted to the foundation. (Commentary: Sec. A.5.3.4. Tier 2: Sec. 5.7.3.3)

GIRDER/COLUMN CONNECTION: There is a positive connection using plates, connection hardware, or straps between the girder and the column support. (Commentary: Sec. A.5.4.1. Tier 2: Sec. 5.7.4.1)

High Seismicity (Complete the Following Items in Addition to the Items for Low and Moderate Seismicity)

Diaphragms DIAPHRAGM CONTINUITY: The diaphragms are not composed of split-level floors and do not have expansion joints. (Commentary: Sec. A.4.1.1. Tier 2: Sec. 5.6.1.1)

ROOF CHORD CONTINUITY: All chord elements are continuous, regardless of changes in roof elevation. (Commentary: Sec. A.4.1.3. Tier 2: Sec. 5.6.1.1)

DIAPHRAGM REINFORCEMENT AT OPENINGS: There is reinforcing around all diaphragm openings larger than 50% of the building width in either major plan dimension. (Commentary: Sec. A.4.1.8. Tier 2: Sec. 5.6.1.5)

STRAIGHT SHEATHING: All straight sheathed diaphragms have aspect ratios less than 2-to-1 in the direction being considered. (Commentary: Sec. A.4.2.1. Tier 2: Sec. 5.6.2)

SPANS: All wood diaphragms with spans greater than 24 ft consist of wood structural panels or diagonal sheathing. Wood commercial and industrial buildings may have rod-braced systems. (Commentary: Sec. A.4.2.2. Tier 2: Sec. 5.6.2)

DIAGONALLY SHEATHED AND UNBLOCKED DIAPHRAGMS: All diagonally sheathed or unblocked wood structural panel diaphragms have horizontal spans less than 40 ft and aspect ratios less than or equal to 4-to-1. (Commentary: Sec. A.4.2.3. Tier 2: Sec. 5.6.2)

OTHER DIAPHRAGMS: The diaphragm does not consist of a system other than wood, metal deck, concrete, or horizontal bracing. (Commentary: Sec. A.4.7.1. Tier 2: Sec. 5.6.5)

Connections WOOD SILL BOLTS: Sill bolts are spaced at 6 ft or less, with proper edge and end distance provided for wood and concrete. (Commentary: A.5.3.7. Tier 2: Sec. 5.7.3.3)

16.3IO IMMEDIATE OCCUPANCY STRUCTURAL CHECKLIST FOR BUILDING TYPE W2: WOOD FRAMES, COMMERCIAL AND INDUSTRIAL

This Immediate Occupancy Structural Checklist shall be completed where required by Table 4-7 and where the building configuration complies with the description of W2 building type defined in Table 3-1. Tier 1 screening shall include on-site investigation and condition assessment as required by Section 4.2.1.

Each of the evaluation statements in this checklist shall be marked Compliant (C), Noncompliant (NC), Not Applicable (N/A), or Unknown (U) for a Tier 1 screening. Compliant statements identify issues that are acceptable according to the criteria of this standard, whereas noncompliant and unknown statements identify issues that require further investigation. Certain statements may not apply to the buildings being evaluated. For noncompliant and unknown evaluation statements, the design professional may choose to conduct further investigation using the corresponding Tier 2 evaluation procedure; corresponding section numbers are in parentheses after each evaluation statement.

C16.3IO IMMEDIATE OCCUPANCY STRUCTURAL CHECKLIST FOR BUILDING TYPE W2: WOOD FRAMES, COMMERCIAL AND INDUSTRIAL

These buildings are commercial or industrial buildings with a floor area of 5,000 ft^2 or more. There are few, if any, interior walls. The floor and roof framing consists of wood or steel trusses, glulam or steel beams, and wood posts or steel columns. Seismic forces are resisted by wood diaphragms and exterior stud walls sheathed with plywood, oriented strand board, stucco, plaster, straight or diagonal wood sheathing, or braced with rod bracing. Wall openings for storefronts and garages, where present, are framed by post-and-beam framing.

Very Low Seismicity

Seismic-Force-Resisting System REDUNDANCY: The number of lines of shear walls in each principal direction is greater than or equal to 2. (Commentary: Sec. A.3.2.1.1. Tier 2: Sec. 5.5.1.1)

SHEAR STRESS CHECK: The shear stress in the shear walls, calculated using the Quick Check procedure of Section 4.5.3.3, is less than the following values (Commentary: Sec. A.3.2.7.1. Tier 2: Sec. 5.5.3.1.1):

Structural panel sheathing	1,000 lb/ft
Diagonal sheathing	700 lb/ft
Straight sheathing	100 lb/ft
All other conditions	100 lb/ft

STUCCO (EXTERIOR PLASTER) SHEAR WALLS: Multi-story buildings do not rely on exterior stucco walls as the primary seismic-force-resisting system. (Commentary: Sec. A.3.2.7.2. Tier 2: Sec. 5.5.3.6.1)

GYPSUM WALLBOARD OR PLASTER SHEAR WALLS: Interior plaster or gypsum wallboard is not used as shear walls on buildings more than one story high with the exception of the uppermost level of a multi-story building. (Commentary: Sec. A.3.2.7.3. Tier 2: Sec. 5.5.3.6.1)

NARROW WOOD SHEAR WALLS: Narrow wood shear walls with an aspect ratio greater than 2-to-1 are not used to resist seismic forces. (Commentary: Sec. A.3.2.7.4. Tier 2: Sec. 5.5.3.6.1)

WALLS CONNECTED THROUGH FLOORS: Shear walls have an interconnection between stories to transfer overturning and shear forces through the floor. (Commentary: Sec. A.3.2.7.5. Tier 2: Sec. 5.5.3.6.2)

HILLSIDE SITE: For structures that are taller on at least one side by more than one-half story because of a sloping site, all shear walls on the downhill slope have an aspect ratio less than 1-to-2. (Commentary: Sec. A.3.2.7.6. Tier 2: Sec. 5.5.3.6.3)

CRIPPLE WALLS: Cripple walls below first-floor-level shear walls are braced to the foundation with wood structural panels. (Commentary: Sec. A.3.2.7.7. Tier 2: Sec. 5.5.3.6.4)

OPENINGS: Walls with openings greater than 80% of the length are braced with wood structural panel shear walls with aspect ratios of not more than 1.5-to-1 or are supported by adjacent construction through positive ties capable of transferring the seismic forces. (Commentary: Sec. A.3.2.7.8. Tier 2: Sec. 5.5.3.6.5)

HOLD-DOWN ANCHORS: All shear walls have hold-down anchors, constructed per acceptable construction practices, attached to the end studs. (Commentary: Sec. A.3.2.7.9. Tier 2: Sec. 5.5.3.6.6)

Connections WOOD POSTS: There is a positive connection of wood posts to the foundation. (Commentary: Sec. A.5.3.3. Tier 2: Sec. 5.7.3.3)

WOOD SILLS: All wood sills are bolted to the foundation. (Commentary: Sec. A.5.3.4. Tier 2: Sec. 5.7.3.3)

GIRDER/COLUMN CONNECTION: There is a positive connection using plates, connection hardware, or straps between the girder and the column support. (Commentary: Sec. A.5.4.1. Tier 2: Sec. 5.7.4.1)

Foundation System DEEP FOUNDATIONS: Piles and piers are capable of transferring the lateral forces between the structure and the soil. (Commentary: Sec. A.6.2.3.)

SLOPING SITES: The difference in foundation embedment depth from one side of the building to another shall not exceed one story high. (Commentary: Sec. A.6.2.4)

Low, Moderate, and High Seismicity (Complete the Following Items in Addition to the Items for Very Low Seismicity)

Seismic-Force-Resisting System NARROW WOOD SHEAR WALLS: Narrow wood shear walls with an aspect ratio greater than 1.5-to-1 are not used to resist seismic forces. (Commentary: Sec. A.3.2.7.4. Tier 2: Sec. 5.5.3.6.1)

Diaphragms DIAPHRAGM CONTINUITY: The diaphragms are not composed of split-level floors and do not have expansion joints. (Commentary: Sec. A.4.1.1. Tier 2: Sec. 5.6.1.1)

ROOF CHORD CONTINUITY: All chord elements are continuous, regardless of changes in roof elevation. (Commentary: Sec. A.4.1.3. Tier 2: Sec. 5.6.1.1)

PLAN IRREGULARITIES: There is tensile capacity to develop the strength of the diaphragm at reentrant corners or other locations of plan irregularities. (Commentary: Sec. A.4.1.7. Tier 2: Sec. 5.6.1.4)

DIAPHRAGM REINFORCEMENT AT OPENINGS: There is reinforcing around all diaphragm openings larger than 50% of the building width in either major plan dimension. (Commentary: Sec. A.4.1.8. Tier 2: Sec. 5.6.1.5)

STRAIGHT SHEATHING: All straight sheathed diaphragms have aspect ratios less than 1-to-1 in the direction being considered. (Commentary: Sec. A.4.2.1. Tier 2: Sec. 5.6.2)

SPANS: All wood diaphragms with spans greater than 12 ft consist of wood structural panels or diagonal sheathing. Wood commercial and industrial buildings may have rod-braced systems. (Commentary: Sec. A.4.2.2. Tier 2: Sec. 5.6.2)

DIAGONALLY SHEATHED AND UNBLOCKED DIAPHRAGMS: All diagonally sheathed or unblocked wood structural panel diaphragms have horizontal spans less than 30 ft and aspect ratios less than or equal to 3-to-1. (Commentary: Sec. A.4.2.3. Tier 2: Sec. 5.6.2)

OTHER DIAPHRAGMS: The diaphragm does not consist of a system other than wood, metal deck, concrete, or horizontal bracing. (Commentary: Sec. A.4.7.1. Tier 2: Sec. 5.6.5)

Connections WOOD SILL BOLTS: Sill bolts are spaced at 4 ft or less, with proper edge and end distance provided for wood and concrete. (Commentary: Sec. A.5.3.7. Tier 2: Sec. 5.7.3.3)

16.4LS LIFE SAFETY STRUCTURAL CHECKLIST FOR BUILDING TYPES S1: STEEL MOMENT FRAMES WITH STIFF DIAPHRAGMS AND S1A: STEEL MOMENT FRAMES WITH FLEXIBLE DIAPHRAGMS

This Life Safety Structural Checklist shall be completed where required by Table 4-7 and where the building configuration complies with the description of S1 or S1a building type as defined in Table 3-1. Tier 1 screening shall include on-site investigation and condition assessment as required by Section 4.2.1.

Each of the evaluation statements in this checklist shall be marked Compliant (C), Noncompliant (NC), Not Applicable (N/A), or Unknown (U) for a Tier 1 screening. Compliant statements identify issues that are acceptable according to the criteria of this standard, whereas noncompliant and unknown statements identify issues that require further investigation. Certain statements may not apply to the buildings being evaluated. For noncompliant and unknown evaluation statements, the design professional may choose to conduct further investigation using the corresponding Tier 2 evaluation procedure; corresponding section numbers are in parentheses after each evaluation statement.

C16.4LS LIFE SAFETY STRUCTURAL CHECKLIST FOR BUILDING TYPE S1: STEEL MOMENT FRAMES WITH STIFF DIAPHRAGMS AND TYPE S1A: STEEL MOMENT FRAMES WITH FLEXIBLE DIAPHRAGMS

Building Type S1: Steel Moment Frames with Stiff Diaphragms These buildings consist of a frame assembly of steel beams and steel columns. Floor and roof framing consists of cast-in-place concrete slabs or metal deck with concrete fill supported on steel beams, open web joists, or steel trusses. Seismic forces are resisted by steel moment frames that develop their stiffness through rigid or semirigid beam–column connections.

Where all connections are moment-resisting connections, the entire frame participates in seismic force resistance. Where only selected connections are moment-resisting connections, resistance is provided along discrete frame lines. Columns are oriented so that each principal direction of the building has columns resisting forces in strong axis bending. Diaphragms consist of concrete or metal deck with concrete fill and are stiff relative to the frames.

Where the exterior of the structure is concealed, walls consist of metal panel curtain walls, glazing, brick masonry, or precast concrete panels. Where the interior of the structure is finished, frames are concealed by ceilings, partition walls, and architectural column furring. Foundations consist of concrete spread footings or deep pile foundations.

Refer to Section A.3.1.3 for a general discussion of steel moment frames.

Building Type S1a: Steel Moment Frames with Flexible Diaphragms These buildings are similar to building type S1, except that the diaphragms consist of wood framing; untopped metal deck; or metal deck with lightweight insulating concrete, poured gypsum, or similar nonstructural topping and are flexible relative to the frames.

Low Seismicity

Seismic-Force-Resisting System DRIFT CHECK: The drift ratio of the steel moment frames, calculated using the Quick Check procedure of Section 4.5.3.1, is less than 0.025. (Commentary: Sec. A.3.1.3.1. Tier 2: Sec. 5.5.2.1.2)

COLUMN AXIAL STRESS CHECK: The axial stress caused by gravity loads in columns subjected to overturning forces is less than $0.10F_y$. Alternatively, the axial stress caused by overturning forces alone, calculated using the Quick Check procedure of Section 4.5.3.6, is less than $0.30F_y$. (Commentary: Sec. A.3.1.3.2. Tier 2: Sec. 5.5.2.1.3)

FLEXURAL STRESS CHECK: The average flexural stress in the moment frame columns and beams, calculated using the Quick Check procedure of Section 4.5.3.9, is less than F_y. Columns need not be checked if the strong column–weak beam checklist item is compliant. (Commentary: Sec. A.3.1.3.3. Tier 2: Sec. 5.5.2.1.2)

Connections TRANSFER TO STEEL FRAMES: Diaphragms are connected for transfer of seismic forces to the steel frames. (Commentary: Sec. A.5.2.2. Tier 2: Sec. 5.7.2)

STEEL COLUMNS: The columns in seismic-force-resisting frames are anchored to the building foundation. (Commentary: Sec. A.5.3.1. Tier 2: Sec. 5.7.3.1)

Moderate Seismicity (Complete the Following Items in Addition to the Items for Low Seismicity)

Seismic-Force-Resisting System REDUNDANCY: The number of lines of moment frames in each principal direction is greater than or equal to 2. The number of bays of moment frames in each line is greater than or equal to 2. (Commentary: Sec. A.3.1.1.1. Tier 2: Sec. 5.5.1.1)

INTERFERING WALLS: All concrete and masonry infill walls placed in moment frames are isolated from structural elements. (Commentary: Sec. A.3.1.2.1. Tier 2: Sec. 5.5.2.1.1)

MOMENT-RESISTING CONNECTIONS: All moment connections can develop the strength of the adjoining members based on the specified minimum yield stress of steel. (Commentary: Sec. A.3.1.3.4. Tier 2: Sec. 5.5.2.2.1). Note: more restrictive requirements for High Seismicity.

High Seismicity (Complete the Following Items in Addition to the Items for Low and Moderate Seismicity)

Seismic-Force-Resisting System MOMENT-RESISTING CONNECTIONS: All moment connections are able to develop the strength of the adjoining members or panel zones based on 110% of the expected yield stress of the steel per AISC 341, Section A3.2. (Commentary: Sec. A.3.1.3.4. Tier 2: Sec. 5.5.2.2.1)

PANEL ZONES: All panel zones have the shear capacity to resist the shear demand required to develop 0.8 times the sum of the flexural strengths of the girders framing in at the face of the column. (Commentary: Sec. A.3.1.3.5. Tier 2: Sec. 5.5.2.2.2)

COLUMN SPLICES: All column splice details located in moment-resisting frames include connection of both flanges and the web. (Commentary: Sec. A.3.1.3.6. Tier 2: Sec. 5.5.2.2.3)

STRONG COLUMN—WEAK BEAM: The percentage of strong column–weak beam joints in each story of each line of moment frames is greater than 50%. (Commentary: Sec. A.3.1.3.7. Tier 2: Sec. 5.5.2.1.5)

COMPACT MEMBERS: All frame elements meet section requirements set forth by AISC 341, Table D1.1, for moderately ductile members. (Commentary: Sec. A.3.1.3.8. Tier 2: Sec. 5.5.2.2.4)

Diaphragms (Stiff or Flexible) OPENINGS AT FRAMES: Diaphragm openings immediately adjacent to the moment frames extend less than 25% of the total frame length. (Commentary: Sec. A.4.1.5. Tier 2: Sec. 5.6.1.3)

Flexible Diaphragms CROSS TIES: There are continuous cross ties between diaphragm chords. (Commentary: Sec. A.4.1.2. Tier 2: Sec. 5.6.1.2)

STRAIGHT SHEATHING: All straight sheathed diaphragms have aspect ratios less than 2-to-1 in the direction being considered. (Commentary: Sec. A.4.2.1. Tier 2: Sec. 5.6.2)

SPANS: All wood diaphragms with spans greater than 24 ft consist of wood structural panels or diagonal sheathing. (Commentary: Sec. A.4.2.2. Tier 2: Sec. 5.6.2)

DIAGONALLY SHEATHED AND UNBLOCKED DIAPHRAGMS: All diagonally sheathed or unblocked wood structural panel diaphragms have horizontal spans less than 40 ft and aspect ratios less than or equal to 4-to-1. (Commentary: Sec. A.4.2.3. Tier 2: Sec. 5.6.2)

OTHER DIAPHRAGMS: The diaphragm does not consist of a system other than wood, metal deck, concrete, or horizontal bracing. (Commentary: Sec. A.4.7.1. Tier 2: Sec. 5.6.5)

16.4IO IMMEDIATE OCCUPANCY STRUCTURAL CHECKLIST FOR BUILDING TYPES S1: STEEL MOMENT FRAMES WITH STIFF DIAPHRAGMS AND S1A: STEEL MOMENT FRAMES WITH FLEXIBLE DIAPHRAGMS

This Immediate Occupancy Structural Checklist shall be completed where required by Table 4-7 and where the building configuration complies with the description of S1 or S1a building type as defined in Table 3-1. Tier 1 screening shall include on-site investigation and condition assessment as required by Section 4.2.1.

Each of the evaluation statements in this checklist shall be marked Compliant (C), Noncompliant (NC), Not Applicable (N/A), or Unknown (U) for a Tier 1 screening. Compliant statements identify issues that are acceptable according to the criteria

of this standard, whereas noncompliant and unknown statements identify issues that require further investigation. Certain statements may not apply to the buildings being evaluated. For noncompliant and unknown evaluation statements, the design professional may choose to conduct further investigation using the corresponding Tier 2 evaluation procedure; corresponding section numbers are in parentheses after each evaluation statement.

C16.4IO IMMEDIATE OCCUPANCY STRUCTURAL CHECKLIST FOR BUILDING TYPE S1: STEEL MOMENT FRAMES WITH STIFF DIAPHRAGMS AND TYPE S1A: STEEL MOMENT FRAMES WITH FLEXIBLE DIAPHRAGMS

Building Type S1: Steel Moment Frames with Stiff Diaphragms These buildings consist of a frame assembly of steel beams and steel columns. Floor and roof framing consists of cast-in-place concrete slabs or metal deck with concrete fill supported on steel beams, open web joists, or steel trusses. Seismic forces are resisted by steel moment frames that develop their stiffness through rigid or semirigid beam–column connections. Where all connections are moment-resisting connections, the entire frame participates in seismic force resistance. Where only selected connections are moment-resisting connections, resistance is provided along discrete frame lines. Columns are oriented so that each principal direction of the building has columns resisting forces in strong axis bending. Diaphragms consist of concrete or metal deck with concrete fill and are stiff relative to the frames.

Where the exterior of the structure is concealed, walls consist of metal panel curtain walls, glazing, brick masonry, or precast concrete panels. Where the interior of the structure is finished, frames are concealed by ceilings, partition walls, and architectural column furring. Foundations consist of concrete spread footings or deep pile foundations.

Refer to Section A.3.1.3 for a general discussion of steel moment frames.

Building Type S1a: Steel Moment Frames with Flexible Diaphragms These buildings are similar to building type S1 except that diaphragms consist of wood framing; untopped metal deck; or metal deck with lightweight insulating concrete, poured gypsum, or similar nonstructural topping and are flexible relative to the frames.

Very Low Seismicity

Seismic-Force-Resisting System DRIFT CHECK: The drift ratio of the steel moment frames, calculated using the Quick Check procedure of Section 4.5.3.1, is less than 0.015. (Commentary: Sec. A.3.1.3.1. Tier 2: Sec. 5.5.2.1.2)

COLUMN AXIAL STRESS CHECK: The axial stress caused by gravity loads in columns subjected to overturning forces is less than $0.10F_y$. Alternatively, the axial stress caused by overturning forces alone, calculated using the Quick Check procedure of Section 4.5.3.6, is less than $0.30F_y$. (Commentary: Sec. A.3.1.3.2. Tier 2: Sec. 5.5.2.1.3)

FLEXURAL STRESS CHECK: The average flexural stress in the moment frame columns and beams, calculated using the Quick Check procedure of Section 4.5.3.9, is less than F_y. Columns need not be checked if the strong column/weak beam checklist item is compliant. (Commentary: Sec. A.3.1.3.3. Tier 2: Sec. 5.5.2.1.2)

Connections STEEL COLUMNS: The columns in seismic-force-resisting frames are anchored to the building foundation. (Commentary: Sec. A.5.3.1. Tier 2: Sec. 5.7.3.1)

Low Seismicity (Complete the Following Items in Addition to the Items for Very Low Seismicity)

Seismic-Force-Resisting System REDUNDANCY: The number of lines of moment frames in each principal direction is greater than or equal to 2. The number of bays of moment frames in each line is greater than or equal to 3. (Commentary: Sec. A.3.1.1.1. Tier 2: Sec. 5.5.1.1)

INTERFERING WALLS: All concrete and masonry infill walls placed in moment frames are isolated from structural elements. (Commentary: Sec. A.3.1.2.1. Tier 2: Sec. 5.5.2.1.1)

Connections TRANSFER TO STEEL FRAMES: Diaphragms are connected for transfer of seismic forces to the steel frames, and the connections are able to develop the lesser of the strength of the frames or the diaphragms. (Commentary: Sec. A.5.2.2. Tier 2: Sec. 5.7.2)

STEEL COLUMNS: The columns in seismic-force-resisting frames are anchored to the building foundation, and the anchorage is able to develop the least of the tensile capacity of the column, the tensile capacity of the lowest level column splice (if any), or the uplift capacity of the foundation. (Commentary: Sec. A.5.3.1. Tier 2: Sec. 5.7.3.1)

Moderate Seismicity (Complete the Following Items in Addition to the Items for Very Low and Low Seismicity)

Seismic-Force-Resisting System MOMENT-RESISTING CONNECTIONS: All moment connections are able to develop the expected strength of the adjoining members based on the specified minimum yield stress of the steel. (Commentary: Sec. A.3.1.3.4. Tier 2: Sec. 5.5.2.2.1). Note: more restrictive requirements for High Seismicity.

PANEL ZONES: All panel zones have the shear capacity to resist the shear demand required to develop 0.8 times the sum of the flexural strengths of the girders framing in at the face of the column. (Commentary: Sec. A.3.1.3.5. Tier 2: Sec. 5.5.2.2.2)

COLUMN SPLICES: All column splice details located in moment frames include connection of both flanges and the web, and the splice develops the strength of the column. (Commentary: Sec. A.3.1.3.6. Tier 2: Sec. 5.5.2.2.3)

STRONG COLUMN—WEAK BEAM: The percentage of strong column–weak beam joints in each story of each line of moment-resisting frames is greater than 50%. (Commentary: Sec. A.3.1.3.7. Tier 2: Sec. 5.5.2.1.5)

COMPACT MEMBERS: All frame elements meet section requirements set forth by AISC 341, Table D1.1, for highly ductile members. (Commentary: Sec. A.3.1.3.8. Tier 2: Sec. 5.5.2.2.4)

BEAM PENETRATIONS: All openings in frame-beam webs are less than one quarter of the beam depth and are located in the center half of the beams. (Commentary: Sec. A.3.1.3.9. Tier 2: Sec. 5.5.2.2.5)

GIRDER FLANGE CONTINUITY PLATES: There are girder flange continuity plates at all moment frame joints. (Commentary: Sec. A.3.1.3.10. Tier 2: Sec. 5.5.2.2.6)

OUT-OF-PLANE BRACING: Beam–column joints are braced out-of-plane. (Commentary: Sec. A.3.1.3.11. Tier 2: Sec. 5.5.2.2.7)

BOTTOM FLANGE BRACING: The bottom flanges of beams are braced out-of-plane. (Commentary: Sec. A.3.1.3.12. Tier 2: Sec. 5.5.2.2.8)

Diaphragms (Stiff or Flexible) PLAN IRREGULARITIES: There is tensile capacity to develop the strength of the diaphragm at reentrant corners or other locations of plan irregularities. (Commentary: Sec. A.4.1.7. Tier 2: Sec. 5.6.1.4)

DIAPHRAGM REINFORCEMENT AT OPENINGS: There is reinforcing around all diaphragm openings larger than 50% of the building width in either major plan dimension. (Commentary: Sec. A.4.1.8. Tier 2: Sec. 5.6.1.5)

OPENINGS AT FRAMES: Diaphragm openings immediately adjacent to the moment frames extend less than 15% of the total frame length. (Commentary: Sec. A.4.1.5. Tier 2: Sec. 5.6.1.3)

Flexible Diaphragms CROSS TIES: There are continuous cross ties between diaphragm chords. (Commentary: Sec. A.4.1.2. Tier 2: Sec. 5.6.1.2)

STRAIGHT SHEATHING: All straight sheathed diaphragms have aspect ratios less than 1-to-1 in the direction being considered. (Commentary: Sec. A.4.2.1. Tier 2: Sec. 5.6.2)

SPANS: All wood diaphragms with spans greater than 12 ft consist of wood structural panels or diagonal sheathing. (Commentary: Sec. A.4.2.2. Tier 2: Sec. 5.6.2)

DIAGONALLY SHEATHED AND UNBLOCKED DIAPHRAGMS: All diagonally sheathed or unblocked wood structural panel diaphragms have horizontal spans less than 30 ft and aspect ratios less than or equal to 3-to-1. (Commentary: Sec. A.4.2.3. Tier 2: Sec. 5.6.2)

NONCONCRETE FILLED DIAPHRAGMS: Untopped metal deck diaphragms or metal deck diaphragms with fill other than concrete consist of horizontal spans of less than 40 ft and have aspect ratios less than 4-to-1. (Commentary: Sec. A.4.3.1. Tier 2: Sec. 5.6.3)

OTHER DIAPHRAGMS: The diaphragm does not consist of a system other than wood, metal deck, concrete, or horizontal bracing. (Commentary: Sec. A.4.7.1. Tier 2: Sec. 5.6.5)

High Seismicity (Complete the Following Items in Addition to the Items for Very Low, Low, and Moderate Seismicity)

Seismic-Force-Resisting System MOMENT-RESISTING CONNECTIONS: All moment connections are able to develop the strength of the adjoining members or panel zones based on 110% of the expected yield stress of the steel per AISC 341, Section A3.2. (Commentary: Sec. A.3.1.3.4. Tier 2: Sec. 5.5.2.2.1)

Foundation System DEEP FOUNDATIONS: Piles and piers are capable of transferring the seismic forces between the structure and the soil. (Commentary: Sec. A.6.2.3.)

SLOPING SITES: The difference in foundation embedment depth from one side of the building to another does not exceed one story high. (Commentary: Sec. A.6.2.4)

16.5LS LIFE SAFETY STRUCTURAL CHECKLIST FOR BUILDING TYPES S2: STEEL BRACED FRAMES WITH STIFF DIAPHRAGMS AND S2A: STEEL BRACED FRAMES WITH FLEXIBLE DIAPHRAGMS

This Life Safety Structural Checklist shall be completed where required by Table 4-7 and where the building configuration complies with the description of S2 or S2a building type defined in Table 3-1. Tier 1 screening shall include on-site investigation and condition assessment as required by Section 4.2.1.

Each of the evaluation statements in this checklist shall be marked Compliant (C), Noncompliant (NC), Not Applicable (N/A), or Unknown (U) for a Tier 1 screening. Compliant statements identify issues that are acceptable according to the criteria of this standard, whereas noncompliant and unknown statements identify issues that require further investigation. Certain statements may not apply to the buildings being evaluated. For noncompliant and unknown evaluation statements, the design professional may choose to conduct further investigation using the corresponding Tier 2 evaluation procedure; corresponding section numbers are in parentheses after each evaluation statement.

C16.5LS LIFE SAFETY STRUCTURAL CHECKLIST FOR BUILDING TYPES S2: STEEL BRACED FRAMES WITH STIFF DIAPHRAGMS AND S2A: STEEL BRACED FRAMES WITH FLEXIBLE DIAPHRAGMS

Building Type S2: Steel Braced Frames with Stiff Diaphragms These buildings have a frame of steel columns, beams, and braces. Braced frames develop resistance to seismic forces by the bracing action of the diagonal members. The braces induce forces in the associated beams and columns such that all elements work together in a manner similar to a truss with all element stresses being primarily axial. Where the braces do not completely triangulate the panel, some of the members are subjected to shear and flexural stresses; eccentrically braced frames are one such case.

The diaphragms consist of concrete or metal deck with concrete fill and are stiff relative to the frames.

Where the exterior of the structure is concealed, walls consist of metal panel curtain walls, glazing, brick masonry, or precast concrete panels. Where the interior of the structure is finished, frames are concealed by ceilings, partition walls, and architectural furring. Foundations consist of concrete spread footings or deep pile foundations.

Refer to Section A.3.3 for additional general commentary on braced frames, Section A.3.3.2 for concentrically braced frames, and Section A.3.3.3 for eccentrically braced frames.

Building Type S2a: Steel Braced Frames with Flexible Diaphragms These buildings are similar to building type S2a except that diaphragms consist of wood framing; untopped metal deck; or metal deck with lightweight insulating concrete, poured gypsum, or similar nonstructural topping and are flexible relative to the frames.

Low Seismicity

Seismic-Force-Resisting System COLUMN AXIAL STRESS CHECK: The axial stress caused by gravity loads in columns subjected to overturning forces is less than $0.10F_y$. Alternatively, the axial stress caused by overturning forces alone, calculated using the Quick Check procedure of Section 4.5.3.6, is less than $0.30F_y$. (Commentary: Sec. A.3.1.3.2. Tier 2: Sec. 5.5.2.1.3)

BRACE AXIAL STRESS CHECK: The axial stress in the diagonals, calculated using the Quick Check procedure of Section 4.5.3.4, is less than $0.50F_y$. (Commentary: Sec. A.3.3.1.2. Tier 2: Sec. 5.5.4.1)

Connections TRANSFER TO STEEL FRAMES: Diaphragms are connected for transfer of seismic forces to the steel frames. (Commentary: Sec. A.5.2.2. Tier 2: Sec. 5.7.2)

STEEL COLUMNS: The columns in seismic-force-resisting frames are anchored to the building foundation. (Commentary: Sec. A.5.3.1. Tier 2: Sec. 5.7.3.1)

Moderate Seismicity (Complete the Following Items in Addition to the Items for Low Seismicity)

Seismic-Force-Resisting System REDUNDANCY: The number of lines of braced frames in each principal direction is greater than or equal to 2. The number of braced bays in each line is greater than 2. (Commentary: Sec. A.3.3.1.1. Tier 2: Sec. 5.5.1.1)

CONNECTION STRENGTH: All the brace connections develop the buckling capacity of the diagonals. (Commentary: Sec. A.3.3.1.5. Tier 2: Sec. 5.5.4.4)

COMPACT MEMBERS: All brace elements meet compact section requirements set forth by AISC 360, Table B4.1. (Commentary: Sec. A.3.3.1.7. Tier 2: Sec. 5.5.4)

K-BRACING: The bracing system does not include K-braced bays. (Commentary: Sec. A.3.3.2.1. Tier 2: Sec. 5.5.4.6)

High Seismicity (Complete the Following Items in Addition to the Items for Low and Moderate Seismicity)

Seismic-Force-Resisting System COLUMN SPLICES: All column splice details located in braced frames develop 50% of the tensile strength of the column. (Commentary: Sec. A.3.3.1.3. Tier 2: Sec. 5.5.4.2)

SLENDERNESS OF DIAGONALS: All diagonal elements required to carry compression have Kl/r ratios less than 200. (Commentary: Sec. A.3.3.1.4. Tier 2: Sec. 5.5.4.3)

CONNECTION STRENGTH: All the brace connections develop the yield capacity of the diagonals. (Commentary: Sec. A.3.3.1.5. Tier 2: Sec. 5.5.4.4)

COMPACT MEMBERS: All brace elements meet section requirements set forth by AISC 341, Table D1.1, for moderately ductile members. (Commentary: Sec. A.3.3.1.7. Tier 2: Sec. 5.5.4)

CHEVRON BRACING: Beams in chevron, or V-braced, bays are capable of resisting the vertical load resulting from the simultaneous yielding and buckling of the brace pairs. (Commentary: Sec. A.3.3.2.3. Tier 2: Sec. 5.5.4.6)

CONCENTRICALLY BRACED FRAME JOINTS: All the diagonal braces shall frame into the beam–column joints concentrically. (Commentary: Sec. A.3.3.2.4. Tier 2: Sec. 5.5.4.8)

Diaphragms (Stiff or Flexible) OPENINGS AT FRAMES: Diaphragm openings immediately adjacent to the braced frames extend less than 25% of the frame length. (Commentary: Sec. A.4.1.5. Tier 2: Sec. 5.6.1.3)

Flexible Diaphragms CROSS TIES: There are continuous cross ties between diaphragm chords. (Commentary: Sec. A.4.1.2. Tier 2: Sec. 5.6.1.2)

STRAIGHT SHEATHING: All straight sheathed diaphragms have aspect ratios less than 2-to-1 in the direction being considered. (Commentary: Sec. A.4.2.1. Tier 2: Sec. 5.6.2)

SPANS: All wood diaphragms with spans greater than 24 ft consist of wood structural panels or diagonal sheathing. (Commentary: Sec. A.4.2.2. Tier 2: Sec. 5.6.2)

DIAGONALLY SHEATHED AND UNBLOCKED DIAPHRAGMS: All diagonally sheathed or unblocked wood structural panel diaphragms have horizontal spans less than 40 ft and aspect ratios less than or equal to 4-to-1. (Commentary: Sec. A.4.2.3. Tier 2: Sec. 5.6.2)

OTHER DIAPHRAGMS: The diaphragm does not consist of a system other than wood, metal deck, concrete, or horizontal bracing. (Commentary: Sec. A.4.7.1. Tier 2: Sec. 5.6.5)

16.5IO IMMEDIATE OCCUPANCY STRUCTURAL CHECKLIST FOR BUILDING TYPES S2: STEEL BRACED FRAMES AND S2A: STEEL BRACED FRAMES WITH FLEXIBLE DIAPHRAGMS

This Immediate Occupancy Checklist shall be completed where required by Table 4-7 and where the building configuration complies with the description of S2 or S2a building types defined in Table 3-1. Tier 1 screening shall include on-site investigation and condition assessment as required by Section 4.2.1.

Each of the evaluation statements in this checklist shall be marked Compliant (C), Noncompliant (NC), Not Applicable (N/A), or Unknown (U) for a Tier 1 screening. Compliant statements identify issues that are acceptable according to the criteria of this standard, whereas noncompliant and unknown statements identify issues that require further investigation. Certain statements may not apply to the buildings being evaluated. For noncompliant and unknown evaluation statements, the design professional may choose to conduct further investigation using the corresponding Tier 2 evaluation procedure; corresponding section numbers are in parentheses after each evaluation statement.

C16.5IO IMMEDIATE OCCUPANCY STRUCTURAL CHECKLIST FOR BUILDING TYPES S2: STEEL BRACED FRAMES WITH STIFF DIAPHRAGMS AND S2A: STEEL BRACED FRAMES WITH FLEXIBLE DIAPHRAGMS

Building Type S2: Steel Braced Frames with Stiff Diaphragms These buildings have a frame of steel columns, beams, and braces. Braced frames develop resistance to seismic forces by the bracing action of the diagonal members. The braces induce forces in the associated beams and columns such that all elements work together in a manner similar to a truss with all element stresses being primarily axial. Where the braces do not completely triangulate the panel, some of the members are subjected to shear and flexural stresses; eccentrically braced frames are one such case. The diaphragms consist of concrete or metal deck with concrete fill and are stiff relative to the frames.

Where the exterior of the structure is concealed, walls consist of metal panel curtain walls, glazing, brick masonry, or precast concrete panels. Where the interior of the structure is finished, frames are concealed by ceilings, partition walls, and architectural furring. Foundations consist of concrete spread footings or deep pile foundations.

Refer to Section A.3.3 for additional general commentary on braced frames, Section A.3.3.2 for concentrically braced frames, and Section A.3.3.3 for eccentrically braced frames.

Building Type S2a: Steel Braced Frames With Flexible Diaphragms These buildings are similar to building type S2 except that diaphragms consist of wood framing; untopped metal deck; or metal deck with lightweight insulating concrete, poured gypsum, or similar nonstructural topping and are flexible relative to the frames.

Very Low Seismicity

Seismic-Force-Resisting System COLUMN AXIAL STRESS CHECK: The axial stress caused by gravity loads in columns subjected to overturning forces is less than $0.10F_y$. Alternatively, the axial stress caused by overturning forces alone, calculated using the Quick Check procedure of Section 4.5.3.6, is less than $0.30F_y$. (Commentary: Sec. A.3.1.3.2. Tier 2: Sec. 5.5.2.1.3)

BRACE AXIAL STRESS CHECK: The axial stress in the diagonals, calculated using the Quick Check procedure of Section 4.5.3.4, is less than $0.50F_y$. (Commentary: Sec. A.3.3.1.2. Tier 2: Sec. 5.5.4.1)

Connections STEEL COLUMNS: The columns in seismic-force-resisting frames are anchored to the building foundation. (Commentary: Sec. A.5.3.1. Tier 2: Sec. 5.7.3.1)

Low Seismicity (Complete the Following Items in Addition to the Items for Very Low Seismicity)

Connections TRANSFER TO STEEL FRAMES: Diaphragms are connected for transfer of seismic forces to the steel frames, and the connections are able to develop the lesser of the strength of the frames or the diaphragms. (Commentary: Sec. A.5.2.2. Tier 2: Sec. 5.7.2)

Moderate Seismicity (Complete the Following Items in Addition to the Items for Very Low and Low Seismicity)

Seismic-Force-Resisting System REDUNDANCY: The number of lines of braced frames in each principal direction is greater than or equal to 2. The number of braced bays in each line is greater than 3. (Commentary: Sec. A.3.1.1.1. Tier 2: Sec. 5.5.1.1)

COLUMN SPLICES: All column splice details located in braced frames develop 100% of the tensile strength of the column. (Commentary: Sec. A.3.3.1.3. Tier 2: Sec. 5.5.4.2)

SLENDERNESS OF DIAGONALS: All diagonal elements required to carry compression shall have Kl/r ratios less than 200. (Commentary: Sec. A.3.3.1.4. Tier 2: Sec. 5.5.4.3)

CONNECTION STRENGTH: All the brace connections develop the buckling capacity of the diagonals. (Commentary: Sec. A.3.3.1.5. Tier 2: Sec. 5.5.4.4)

OUT-OF-PLANE BRACING: Braced frame connections attached to beam bottom flanges located away from beam–column joints are braced out-of-plane at the bottom flange of the beams. (Commentary: Sec. A.3.3.1.6. Tier 2: Sec. 5.5.4.5)

COMPACT MEMBERS: All brace elements meet compact section requirements set forth by AISC 341, Table B4.1. (Commentary: Sec. A.3.3.1.7. Tier 2: Sec. 5.5.4)

K-BRACING: The bracing system does not include K-braced bays. (Commentary: Sec. A.3.3.2.1. Tier 2: Sec. 5.5.4.6)

TENSION-ONLY BRACES: Tension-only braces do not comprise more than 70% of the total seismic-force-resisting capacity in structures more than two stories high. (Commentary: Sec. A.3.3.2.2. Tier 2: Sec. 5.5.4.7)

CHEVRON BRACING: Beams in chevron, or V-braced, bays are capable of resisting the vertical load resulting from the simultaneous yielding and buckling of the brace pairs. (Commentary: Sec. A.3.3.2.3.Tier 2: Sec. 5.5.4.6)

CONCENTRICALLY BRACED FRAME JOINTS: All the diagonal braces frame into the beam–column joints concentrically. (Commentary: Sec. A.3.3.2.4. Tier 2: Sec. 5.5.4.8)

Diaphragms (Stiff or Flexible) OPENINGS AT FRAMES: Diaphragm openings immediately adjacent to the braced frames extend less than 15% of the frame length. (Commentary: Sec. A.4.1.5. Tier 2: Sec. 5.6.1.3)

PLAN IRREGULARITIES: There is tensile capacity to develop the strength of the diaphragm at reentrant corners or other locations of plan irregularities. (Commentary: Sec. A.4.1.7. Tier 2: Sec. 5.6.1.4)

DIAPHRAGM REINFORCEMENT AT OPENINGS: There is reinforcing around all diaphragm openings larger than 50% of the building width in either major plan dimension. (Commentary: Sec. A.4.1.8. Tier 2: Sec. 5.6.1.5)

Flexible Diaphragms CROSS TIES: There are continuous cross ties between diaphragm chords. (Commentary: Sec. A.4.1.2. Tier 2: Sec. 5.6.1.2)

STRAIGHT SHEATHING: All straight sheathed diaphragms have aspect ratios less than 1-to-1 in the direction being considered. (Commentary: Sec. A.4.2.1. Tier 2: Sec. 5.6.2)

SPANS: All wood diaphragms with spans greater than 12 ft consist of wood structural panels or diagonal sheathing. (Commentary: Sec. A.4.2.2. Tier 2: Sec. 5.6.2)

DIAGONALLY SHEATHED AND UNBLOCKED DIAPHRAGMS: All diagonally sheathed or unblocked wood structural panel diaphragms have horizontal spans less than 30 ft and aspect ratios less than or equal to 3-to-1. (Commentary: Sec. A.4.2.3. Tier 2: Sec. 5.6.2)

NONCONCRETE FILLED DIAPHRAGMS: Untopped metal deck diaphragms or metal deck diaphragms with fill other than concrete consist of horizontal spans of less than 40 ft and have aspect ratios less than 4-to-1. (Commentary: Sec. A.4.3.1. Tier 2: Sec. 5.6.3)

OTHER DIAPHRAGMS: The diaphragm does not consist of a system other than wood, metal deck, concrete, or horizontal bracing. (Commentary: Sec. A.4.7.1. Tier 2: Sec. 5.6.5)

High Seismicity (Complete the Following Items in Addition to the Items for Very Low, Low, and Moderate Seismicity)

Seismic-Force-Resisting System CONNECTION STRENGTH: All the brace connections develop the yield capacity of the diagonals. (Commentary: Sec. A.3.3.1.5. Tier 2: Sec. 5.5.4.4)

COMPACT MEMBERS: All column and brace elements meet section requirements set forth by AISC 341, Table D1.1, for highly ductile members. Braced frame beams meet the requirements for moderately ductile members. (Commentary: Sec. A.3.3.1.7. Tier 2: Sec. 5.5.4)

NET AREA: The brace effective net area is not less than the brace gross area for hollow structural section (HSS) tube and pipes sections. (Commentary: Sec. A.3.3.1.8. Tier 2: Sec. 5.5.4.1)

Connections STEEL COLUMNS: The columns in seismic-force-resisting frames are anchored to the building foundation, and the anchorage is able to develop the least of the tensile capacity of the column, the tensile capacity of the lowest level column splice (if any), or the uplift capacity of the foundation. (Commentary: Sec. A.5.3.1. Tier 2: Sec. 5.7.3.1)

Foundation System DEEP FOUNDATIONS: Piles and piers are capable of transferring the seismic forces between the structure and the soil. (Commentary: Sec. A.6.2.3.)

SLOPING SITES: The difference in foundation embedment depth from one side of the building to another does not exceed one story high. (Commentary: Sec. A.6.2.4)

16.6LS LIFE SAFETY STRUCTURAL CHECKLIST FOR BUILDING TYPE S3: STEEL LIGHT FRAMES

This Life Safety Checklist shall be completed where required by Table 4-7 and where the building configuration complies with the description of S3 building type defined in Table 3-1. Tier 1 screening shall include on-site investigation and condition assessment as required by Section 4.2.1. This Life Safety Checklist shall not be used for a structure with a roof and wall dead load greater than 25 lb/ft^2 or a building area greater than 20,000 sq ft. Where either limit is exceeded, the Life Safety Structural Checklists for Steel Moment Frames (Type S1 or S1a) shall be used.

Each of the evaluation statements in this checklist shall be marked Compliant (C), Noncompliant (NC), Not Applicable (N/A), or Unknown (U) for a Tier 1 screening. Compliant statements identify issues that are acceptable according to the criteria of this standard, whereas noncompliant and unknown statements identify issues that require further investigation. Certain statements may not apply to the buildings being evaluated. For noncompliant and unknown evaluation statements, the design professional may choose to conduct further investigation using the corresponding Tier 2 evaluation procedure; corresponding section numbers are in parentheses after each evaluation statement.

C16.6LS LIFE SAFETY STRUCTURAL CHECKLIST FOR BUILDING TYPE S3: STEEL LIGHT FRAMES

These buildings are pre-engineered and prefabricated with transverse rigid steel frames. They are one story high. The roof and walls consist of lightweight metal, fiberglass, or cementitious panels. The frames are designed for maximum efficiency, and the beams and columns consist of tapered, built-up sections with thin plates. The frames are built in segments and assembled in the field with bolted or welded joints. Seismic forces in the transverse direction are resisted by the rigid frames. Seismic forces in the longitudinal direction are resisted by wall panel shear elements or rod bracing. Diaphragm forces are resisted by untopped metal deck, roof panel shear elements, or a system of tension-only rod bracing.

Low and Moderate Seismicity

Seismic-Force-Resisting System BRACE AXIAL STRESS CHECK: The axial stress in the diagonals, calculated using the Quick Check procedure of Section 4.5.3.4, is less than $0.50F_y$. (Commentary: Sec. A.3.3.1.2. Tier 2: Sec. 5.5.4.1)

Connections TRANSFER TO STEEL FRAMES: Diaphragms are connected for transfer of seismic forces to the steel frames. (Commentary: Sec. A.5.2.2. Tier 2: Sec. 5.7.2)

STEEL COLUMNS: The columns in seismic-force-resisting frames are anchored to the building foundation. (Commentary: Sec. A.5.3.1. Tier 2: Sec. 5.7.3.1)

High Seismicity (Complete the Following Items in Addition to the Items for Low and Moderate Seismicity)

Seismic-Force-Resisting System MOMENT-RESISTING CONNECTIONS: All moment connections are able to develop the elastic moment (F_yS) of the adjoining members. (Commentary: Sec. A.3.1.3.4. Tier 2: Sec. 5.5.2.2.1)

COMPACT MEMBERS: All frame elements shall meet compact section requirements set forth by AISC 360, Table B4.1. (Commentary: Sec. A.3.1.3.8. Tier 2: Sec. 5.5.2.2.4)

OTHER DIAPHRAGMS: The diaphragm does not consist of a system other than wood, metal deck, concrete, or horizontal bracing. (Commentary: Sec. A.4.7.1. Tier 2: Sec. 5.6.5)

Connections ROOF PANELS: Metal, plastic, or cementitious roof panels are positively attached to the roof framing to resist seismic forces. (Commentary: Sec. A.5.5.1. Tier 2: Sec. 5.7.5)

WALL PANELS: Metal, fiberglass, or cementitious wall panels are positively attached to the framing and foundation to resist seismic forces. (Commentary: Sec. A.5.5.2. Tier 2: Sec. 5.7.5)

16.6IO IMMEDIATE OCCUPANCY STRUCTURAL CHECKLIST FOR BUILDING TYPE S3: STEEL LIGHT FRAMES

This Immediate Occupancy Checklist shall be completed where required by Table 4-7 and where the building configuration complies with the description of S3 building type defined in Table 3-1. Tier 1 screening shall include on-site investigation and condition assessment as required by Section 4.2.1. This Immediate Occupancy Checklist shall not be used for a structure with a roof and wall dead load greater than 25 lb/ft^2 or a building area greater than 20,000 sq. ft. Where either limit is exceeded, the Immediate Occupancy Structural Checklist for Steel Moment Frames (Type S1 or S1a) shall be used.

Each of the evaluation statements in this checklist shall be marked Compliant (C), Noncompliant (NC), Not Applicable (N/A), or Unknown (U) for a Tier 1 screening. Compliant statements identify issues that are acceptable according to the criteria of this standard, whereas noncompliant and unknown statements identify issues that require further investigation. Certain statements may not apply to the buildings being evaluated. For noncompliant and unknown evaluation statements, the design professional may choose to conduct further investigation using the corresponding Tier 2 evaluation procedure; corresponding section numbers are in parentheses after each evaluation statement.

C16.6IO IMMEDIATE OCCUPANCY STRUCTURAL CHECKLIST FOR BUILDING TYPE S3: STEEL LIGHT FRAMES

These buildings are pre-engineered and prefabricated with transverse rigid steel frames. They are one story high. The roof and walls consist of lightweight metal, fiberglass, or cementitious panels. The frames are designed for maximum efficiency, and the beams and columns consist of tapered, built-up sections with thin plates. The frames are built in segments and assembled in the field with bolted or welded joints. Seismic forces in the transverse direction are resisted by the rigid frames. Seismic forces in the longitudinal direction are resisted by wall panel shear elements or rod bracing. Diaphragm forces are resisted by untopped metal deck, roof panel shear elements, or a system of tension-only rod bracing.

Very Low and Low Seismicity

Seismic-Force-Resisting System BRACE AXIAL STRESS CHECK: The axial stress in the diagonals, calculated using the Quick Check procedure of Section 4.5.3.4, is less than $0.50F_y$. (Commentary: Sec. A.3.3.1.2. Tier 2: Sec. 5.5.4.1)

FLEXURAL STRESS CHECK: The average flexural stress in the moment frame columns and beams, calculated using the Quick Check procedure of Section 4.5.3.9, is less than F_y. (Commentary: Sec. A.3.1.3.3. Tier 2: Sec. 5.5.2.1.2)

Connections TRANSFER TO STEEL FRAMES: Diaphragms are connected for transfer of seismic forces to the steel frames. (Commentary: Sec. A.5.2.2. Tier 2: Sec. 5.7.2)

STEEL COLUMNS: The columns in seismic-force-resisting frames are anchored to the building foundation. (Commentary: Sec. A.5.3.1. Tier 2: Sec. 5.7.3.1)

Moderate Seismicity (Complete the Following Items in Addition to the Items for Very Low and Low Seismicity)

Seismic-Force-Resisting System MOMENT-RESISTING CONNECTIONS: All moment connections are able to develop the

elastic moment (F_yS) of the adjoining members. (Commentary: Sec. A.3.1.3.4. Tier 2: Sec. 5.5.2.2.1)

Connections ROOF PANELS: Metal, plastic, or cementitious roof panels are positively attached to the roof framing to resist seismic forces. (Commentary: Sec. A.5.5.1. Tier 2: Sec. 5.7.5)

WALL PANELS: Metal, fiberglass, or cementitious wall panels are positively attached to the framing and foundation to resist seismic forces. (Commentary: Sec. A.5.5.2. Tier 2: Sec. 5.7.5)

Diaphragms PLAN IRREGULARITIES: There is tensile capacity to develop the strength of the diaphragm at reentrant corners or other locations of plan irregularities. (Commentary: Sec. A.4.1.7. Tier 2: Sec. 5.6.1.4)

DIAPHRAGM REINFORCEMENT AT OPENINGS: There is reinforcing around all diaphragm openings larger than 50% of the building width in either major plan dimension. (Commentary: Sec. A.4.1.8. Tier 2: Sec. 5.6.1.5)

OTHER DIAPHRAGMS: The diaphragm does not consist of a system other than wood, metal deck, concrete, or horizontal bracing. (Commentary: Sec. A.4.7.1. Tier 2: Sec. 5.6.5)

High Seismicity (Complete the Following Items in Addition to the Items for Very Low, Low, and Moderate Seismicity)

Seismic-Force-Resisting System MOMENT-RESISTING CONNECTIONS: All moment connections are able to develop the strength of the adjoining members or panel zones. (Commentary: Sec. A.3.1.3.4. Tier 2: Sec. 5.5.2.2.1)

COMPACT MEMBERS: All frame elements meet compact section requirements set forth by AISC 360, Table B4.1. (Commentary: Sec. A.3.1.3.8. Tier 2: Sec. 5.5.2.2.4)

BEAM PENETRATIONS: All openings in frame-beam webs are less than one quarter of the beam depth and are located in the center half of the beams. (Commentary: Sec. A.3.1.3.9. Tier 2: Sec. 5.5.2.2.5)

OUT-OF-PLANE BRACING: Beam–column joints are braced out-of-plane. (Commentary: Sec. A.3.1.3.11. Tier 2: Sec. 5.5.2.2.7)

BOTTOM FLANGE BRACING: The bottom flanges of beams are braced out-of-plane. (Commentary: Sec. A.3.1.3.12. Tier 2: Sec. 5.5.2.2.8)

Connections TRANSFER TO STEEL FRAMES: Diaphragms are connected for transfer of seismic forces to the steel frames, and the connections are able to develop the lesser of the strength of the frames or the diaphragms. (Commentary: Sec. A.5.2.2. Tier 2: Sec. 5.7.2)

STEEL COLUMNS: The columns in seismic-force-resisting frames are anchored to the building foundation, and the anchorage is able to develop the least of the tensile capacity of the column, the tensile capacity of the lowest level column splice (if any), or the uplift capacity of the foundation. (Commentary: Sec. A.5.3.1. Tier 2: Sec. 5.7.3.1)

Foundation System DEEP FOUNDATIONS: Piles and piers are capable of transferring the seismic forces between the structure and the soil. (Commentary: Sec. A.6.2.3.)

SLOPING SITES: The difference in foundation embedment depth from one side of the building to another shall not exceed one story high. (Commentary: Sec. A.6.2.4)

16.7LS LIFE SAFETY STRUCTURAL CHECKLIST FOR BUILDING TYPE S4: DUAL SYSTEMS WITH BACKUP STEEL MOMENT FRAMES AND STIFF DIAPHRAGMS

This Life Safety Structural Checklist shall be completed where required by Table 4-7 and where the building configuration complies with the description of S4 building type defined in Table 3-1. Tier 1 screening shall include on-site investigation and condition assessment as required by Section 4.2.1.

Each of the evaluation statements in this checklist shall be marked Compliant (C), Noncompliant (NC), Not Applicable (N/A), or Unknown (U) for a Tier 1 screening. Compliant statements identify issues that are acceptable according to the criteria of this standard, whereas noncompliant and unknown statements identify issues that require further investigation. Certain statements may not apply to the buildings being evaluated. For noncompliant and unknown evaluation statements, the design professional may choose to conduct further investigation using the corresponding Tier 2 evaluation procedure; corresponding section numbers are in parentheses after each evaluation statement.

C16.7LS LIFE SAFETY STRUCTURAL CHECKLIST FOR BUILDING TYPE S4: DUAL SYSTEMS WITH BACKUP STEEL MOMENT FRAMES AND STIFF DIAPHRAGMS

These buildings consist of a frame assembly of steel beams and steel columns. Floor and roof framing consists of steel beams, open web joists, or steel trusses. Seismic forces are resisted primarily by either steel braced frames or cast-in-place concrete shear walls in combination with backup steel moment frames. The steel moment frames are designed to work together with the concrete shear walls or steel braced frames in proportion to their relative rigidity. The steel moment frames provide a secondary seismic-force-resisting system that depends on the stiffness of the moment frame and the moment capacity of the beam–column connections. The moment frames typically are capable of resisting 25% of the building's seismic forces.

Diaphragms consist of concrete or metal deck with concrete fill and are stiff relative to the frames.

Where the exterior of the structure is concealed, walls consist of metal panel curtain walls, glazing, brick masonry, or precast concrete panels. Where the interior of the structure is finished, frames are concealed by ceilings, partition walls, and architectural column furring. Foundations consist of concrete spread footings or deep pile foundations.

Refer to Section A.3.1.3 for additional commentary on steel moment frames, Section A.3.2.2 for concrete shear walls, and A.3.3 for steel braced frames.

Low Seismicity

Seismic-Force-Resisting System DRIFT CHECK: The drift ratio of the steel moment frames acting alone, calculated using the Quick Check procedure of Section 4.5.3.1 using 25% of V_c, is less than 0.025. (Commentary: Sec. A.3.1.3.1. Tier 2: Sec. 5.5.2.1.2)

COLUMN AXIAL STRESS CHECK: The axial stress caused by gravity loads in frame columns subjected to overturning forces is less than $0.10F_y$. Alternatively, the axial stress caused by overturning forces alone, calculated using the Quick Check procedure of Section 4.5.3.6, is less than $0.30F_y$. (Commentary: Sec. A.3.1.3.2. Tier 2: Sec. 5.5.2.1.3)

BRACE AXIAL STRESS CHECK: The axial stress in the diagonal braces, calculated using the Quick Check procedure of Section 4.5.3.4 and neglecting the steel moment frame, is less than $0.50F_y$. (Commentary: Sec. A.3.3.1.2. Tier 2: Sec. 5.5.4.1)

COMPLETE FRAMES: Steel frames classified as secondary components form a complete vertical-load-carrying system. (Commentary: Sec. A.3.1.6.1. Tier 2: Sec. 5.5.2.5.1)

SHEAR STRESS CHECK: The shear stress in the concrete shear walls, calculated using the Quick Check procedure of Section 4.5.3.3 and neglecting the steel moment frame, is less than the greater of 100 lb/in.^{2} or $2\sqrt{f'_c}$. (Commentary: Sec. A.3.2.2.1. Tier 2: Sec. 5.5.3.1.1)

REINFORCING STEEL: The ratio of reinforcing steel area to gross concrete area is not less than 0.0012 in the vertical direction and 0.0020 in the horizontal direction. (Commentary: Sec. A.3.2.2.2. Tier 2: Sec. 5.5.3.1.3)

Connections STEEL COLUMNS: The columns in seismic-force-resisting frames are anchored to the building foundation. (Commentary: Sec. A.5.3.1. Tier 2: Sec. 5.7.3.1)

TRANSFER TO SHEAR WALLS: Diaphragms are connected for transfer of seismic forces to the shear walls. (Commentary: Sec. A.5.2.1. Tier 2: Sec. 5.7.2)

TRANSFER TO STEEL FRAMES: Diaphragms are connected for transfer of seismic forces to the steel frames. (Commentary: Sec. A.5.2.2. Tier 2: Sec. 5.7.2)

FOUNDATION DOWELS: Wall reinforcement is doweled into the foundation. (Commentary: Sec. A.5.3.5. Tier 2: Sec. 5.7.3.4)

Moderate Seismicity (Complete the Following Items in Addition to the Items for Low Seismicity)

Seismic-Force-Resisting System REDUNDANCY: The number of lines of braced frames or shear walls in each principal direction is greater than or equal to 2. For braced frames, the number of braced bays in each line is greater than 2. (Commentary: Sec. A.3.2.1.1 and Sec. A.3.3.1.1. Tier 2: Sec. 5.5.1.1)

MOMENT-RESISTING CONNECTIONS: All moment connections are able to develop the strength of the adjoining members based on the specified minimum yield stress of the steel. (Commentary: Sec. A.3.1.3.4. Tier 2: Sec. 5.5.2.2.1). Note: more restrictive requirements for High Seismicity.

COMPACT MEMBERS: All moment frame and brace elements meet section requirements set forth by AISC 360, Table B4.1. (Commentary: Sec. A.3.1.3.7 and Sec. A.3.1.3.8. Tier 2: Sec. 5.5.2.2.4 and Sec. 5.5.4)

CONNECTION STRENGTH: All the brace connections develop the buckling capacity of the diagonals. (Commentary: Sec. A.3.3.1.5. Tier 2: Sec. 5.5.4.4)

K-BRACING: The bracing system does not include K-braced bays. (Commentary: Sec. A.3.3.2.1. Tier 2: Sec. 5.5.4.6)

High Seismicity (Complete the Following Items in Addition to the Items for Low and Moderate Seismicity)

Seismic-Force-Resisting System MOMENT-RESISTING CONNECTIONS: All moment connections are able to develop the strength of the adjoining members or panel zones based on 110% of the expected yield stress of the steel per AISC 341, Section A3.2. (Commentary: Sec. A.3.1.3.4. Tier 2: Sec. 5.5.2.2.1)

COLUMN SPLICES: All column splice details located in moment frames include connection of both flanges and the web. (Commentary: Sec. A.3.1.3.6. Tier 2: Sec. 5.5.2.2.3)

STRONG COLUMN—WEAK BEAM: The percentage of strong column–weak beam joints in each story of each line of moment frames is greater than 50%. (Commentary: Sec. A.3.1.3.7. Tier 2: Sec. 5.5.2.1.5)

COMPACT MEMBERS: All moment frame and brace elements meet section requirements set forth by AISC 341, Table D1.1 for moderately ductile members. (Commentary: Secs. A.3.1.3.7 and A.3.1.3.8. Tier 2: Secs. 5.5.2.2.4 and 5.5.4)

COLUMN SPLICES: All column splice details located in braced frames develop 50% of the tensile strength of the column. (Commentary: Sec. A.3.3.1.3. Tier 2: Sec. 5.5.4.2)

SLENDERNESS OF DIAGONALS: All diagonal elements required to carry compression have Kl/r ratios less than 200. (Commentary: Sec. A.3.3.1.4. Tier 2: Sec. 5.5.4.3)

CONNECTION STRENGTH: All the brace connections develop the yield capacity of the diagonals. (Commentary: Sec. A.3.3.1.5. Tier 2: Sec. 5.5.4.4)

CHEVRON BRACING: Beams in chevron, or V-braced, bays are capable of resisting the vertical load resulting from the simultaneous yielding and buckling of the brace pairs. (Commentary: Sec. A.3.3.2.3. Tier 2: Sec. 5.5.4.6)

CONCENTRICALLY BRACED FRAME JOINTS: All the diagonal braces frame into the beam–column joints concentrically. (Commentary: Sec. A.3.3.2.4. Tier 2: Sec. 5.5.4.8)

COUPLING BEAMS: The stirrups in coupling beams over means of egress are spaced at or less than $d/2$ and are anchored into the confined core of the beam with hooks of 135 degrees or more. (Commentary: Sec. A.3.2.2.3. Tier 2: Sec. 5.5.3.2.1)

Diaphragms DIAPHRAGM CONTINUITY: The diaphragms are not composed of split-level floors and do not have expansion joints. (Commentary: Sec. A.4.1.1. Tier 2: Sec. 5.6.1.1)

OPENINGS AT SHEAR WALLS: Diaphragm openings immediately adjacent to the shear walls are less than 15% of the wall length. (Commentary: Sec. A.4.1.4. Tier 2: Sec. 5.6.1.3)

OPENINGS AT FRAMES: Diaphragm openings immediately adjacent to the braced frames or moment frames extend less than 25% of the frame length. (Commentary: Sec. A.4.1.5. Tier 2: Sec. 5.6.1.3)

16.7IO IMMEDIATE OCCUPANCY STRUCTURAL CHECKLIST FOR BUILDING TYPE S4: DUAL SYSTEMS WITH BACKUP STEEL MOMENT FRAMES AND STIFF DIAPHRAGMS

This Immediate Occupancy Structural Checklist shall be completed where required by Table 4-7 and where the building configuration complies with the description of S4 building type defined in Table 3-1. Tier 1 screening shall include on-site investigation and condition assessment as required by Section 4.2.1.

Each of the evaluation statements in this checklist shall be marked Compliant (C), Noncompliant (NC), Not Applicable (N/A), or Unknown (U) for a Tier 1 screening. Compliant statements identify issues that are acceptable according to the criteria of this standard, whereas noncompliant and unknown statements identify issues that require further investigation. Certain statements may not apply to the buildings being evaluated. For noncompliant and unknown evaluation statements, the design professional may choose to conduct further investigation using the corresponding Tier 2 evaluation procedure; corresponding section numbers are in parentheses after each evaluation statement.

C16.7IO IMMEDIATE OCCUPANCY STRUCTURAL CHECKLIST FOR BUILDING TYPE S4: DUAL SYSTEMS WITH BACKUP STEEL MOMENT FRAMES AND STIFF DIAPHRAGMS

These buildings consist of a frame assembly of steel beams and steel columns. Floor and roof framing consists of steel beams, open web joists, or steel trusses. Seismic forces are resisted primarily by either steel braced frames or cast-in-place concrete shear walls in combination with the steel moment frames. The

steel moment frames are designed to work together with the concrete shear walls or steel braced frames in proportion to their relative rigidity. The steel moment frames provide a secondary seismic-force-resisting system that depends on the stiffness of the moment frame and the moment capacity of the beam–column connections. The moment frames typically are capable of resisting 25% of the building's seismic forces.

Diaphragms consist of concrete or metal deck with concrete fill and are stiff relative to the frames.

Where the exterior of the structure is concealed, walls consist of metal panel curtain walls, glazing, brick masonry, or precast concrete panels. Where the interior of the structure is finished, frames are concealed by ceilings, partition walls, and architectural column furring. Foundations consist of concrete spread footings or deep pile foundations.

Refer to Section A.3.1.3 for additional commentary on steel moment frames, Section A.3.2.2 for concrete shear walls, and A.3.3 for steel braced frames.

Very Low Seismicity

Seismic-Force-Resisting System COLUMN AXIAL STRESS CHECK: The axial stress caused by gravity loads in frame columns subjected to overturning forces is less than $0.10F_y$. Alternatively, the axial stress caused by overturning forces alone, calculated using the Quick Check procedure of Section 4.5.3.6, is less than $0.30F_y$. (Commentary: Sec. A.3.1.3.2. Tier 2: Sec. 5.5.2.1.3)

BRACE AXIAL STRESS CHECK: The axial stress in the diagonal braces, calculated using the Quick Check procedure of Section 4.5.3.4 and neglecting the steel moment frame, is less than $0.50F_y$. (Commentary: Sec. A.3.3.1.2. Tier 2: Sec. 5.5.4.1)

COMPLETE FRAMES: Steel frames classified as secondary components form a complete vertical-load-carrying system. (Commentary: Sec. A.3.1.6.1. Tier 2: Sec. 5.5.2.5.1)

SHEAR STRESS CHECK: The shear stress in the concrete shear walls, calculated using the Quick Check procedure of Section 4.5.3.3 and neglecting the steel moment frame, is less than the greater of 100 lb/in.^{2} or $2\sqrt{f_c'}$. (Commentary: Sec. A.3.2.2.1. Tier 2: Sec. 5.5.3.1.1)

REINFORCING STEEL: The ratio of shear wall reinforcing steel area to gross concrete area is not less than 0.0012 in the vertical direction and 0.0020 in the horizontal direction. The spacing of reinforcing steel is equal to or less than 18 in. (Commentary: Sec. A.3.2.2.2. Tier 2: Sec. 5.5.3.1.3)

Connections STEEL COLUMNS: The columns in seismic-force-resisting frames are anchored to the building foundation. (Commentary: Sec. A.5.3.1. Tier 2: Sec. 5.7.3.1)

TRANSFER TO SHEAR WALLS: Diaphragms are connected for transfer of seismic forces to the shear walls. (Commentary: Sec. A.5.2.1. Tier 2: Sec. 5.7.2)

FOUNDATION DOWELS: Wall reinforcement is doweled into the foundation, and the dowels are able to develop the lesser of the strength of the walls or the uplift capacity of the foundation. (Commentary: Sec. A.5.3.5. Tier 2: Sec. 5.7.3.4)

Low Seismicity (Complete the Following Items in Addition to the Items for Very Low Seismicity)

Seismic-Force-Resisting System DRIFT CHECK: The drift ratio of the steel moment frames acting alone, calculated using the Quick Check procedure of Section 4.5.3.1 using 25% of V_c, is less than 0.015. (Commentary: Sec. A.3.1.3.1. Tier 2: Sec. 5.5.2.1.2)

REDUNDANCY: The number of lines of braced frames or shear walls in each principal direction is greater than or equal to 2. The number of braced bays in each line is greater than 3. (Commentary: Sec. A.3.2.1.1 and Sec. A.3.1.1.1. Tier 2: Sec. 5.5.1.1)

INTERFERING WALLS: All concrete and masonry infill walls placed in moment frames are isolated from structural elements. (Commentary: Sec. A.3.1.2.1. Tier 2: Sec. 5.5.2.1.1)

Connections TRANSFER TO STEEL FRAMES: Diaphragms are connected for transfer of seismic forces to the steel frames, and the connections are able to develop the lesser of the strength of the frames or the diaphragms. (Commentary: Sec. A.5.2.2. Tier 2: Sec. 5.7.2)

Moderate Seismicity (Complete the Following Items in Addition to the Items for Very Low and Low Seismicity)

Seismic-Force-Resisting System MOMENT-RESISTING CONNECTIONS: All moment connections are able to develop the strength of the adjoining members based on the specified minimum yield stress of the steel. (Commentary: Sec. A.3.1.3.4. Tier 2: Sec. 5.5.2.2.1). Note: more restrictive requirements for High Seismicity.

PANEL ZONES: All panel zones have the shear capacity to resist the shear demand required to develop 0.8 times the sum of the flexural strengths of the girders framing in at the face of the column. (Commentary: Sec. A.3.1.3.5. Tier 2: Sec. 5.5.2.2.2)

COLUMN SPLICES: All column splice details located in moment frames include connection of both flanges and the web, and the splice develops the strength of the column. (Commentary: Sec. A.3.1.3.6. Tier 2: Sec. 5.5.2.2.3)

STRONG COLUMN—WEAK BEAM: The percentage of strong column–weak beam joints in each story of each line of moment frames is greater than 50%. (Commentary: Sec. A.3.1.3.7. Tier 2: Sec. 5.5.2.1.5)

BEAM PENETRATIONS: All openings in frame-beam webs are less than one quarter of the beam depth and are located in the center half of the beams. (Commentary: Sec. A.3.1.3.9. Tier 2: Sec. 5.5.2.2.5)

GIRDER FLANGE CONTINUITY PLATES: There are girder flange continuity plates at all moment-resisting frame joints. (Commentary: Sec. A.3.1.3.10. Tier 2: Sec. 5.5.2.2.6)

OUT-OF-PLANE BRACING: Beam–column joints are braced out-of-plane. (Commentary: Sec. A.3.1.3.11. Tier 2: Sec. 5.5.2.2.7)

BOTTOM FLANGE BRACING: The bottom flanges of beams are braced out-of-plane. (Commentary: Sec. A.3.1.3.12. Tier 2: Sec. 5.5.2.2.8)

COMPACT MEMBERS: All brace elements meet section requirements set forth by AISC 360, Table B4.1. (Commentary: Sec. A.3.3.1.7. Tier 2: Sec. 5.5.4)

COLUMN SPLICES: All column splice details located in braced frames develop 100% of the tensile strength of the column. (Commentary: Sec. A.3.3.1.3. Tier 2: Sec. 5.5.4.2)

SLENDERNESS OF DIAGONALS: All diagonal elements required to carry compression have Kl/r ratios less than 200. (Commentary: Sec. A.3.3.1.4. Tier 2: Sec. 5.5.4.3)

CONNECTION STRENGTH: All the brace connections develop the buckling capacity of the diagonals. (Commentary: Sec. A.3.3.1.5. Tier 2: Sec. 5.5.4.4)

OUT-OF-PLANE BRACING: Braced frame connections attached to beam bottom flanges located away from beam–column joints are braced out-of-plane at the bottom flange of the beams. (Commentary: Sec. A.3.3.1.6. Tier 2: Sec. 5.5.4.5)

K-BRACING: The bracing system does not include K-braced bays. (Commentary: Sec. A.3.3.2.1. Tier 2: Sec. 5.5.4.6)

TENSION-ONLY BRACES: Tension-only braces do not comprise more than 70% of the total seismic-force-resisting

capacity in structures more than two stories high. (Commentary: Sec. A.3.3.2.2. Tier 2: Sec. 5.5.4.7)

CHEVRON BRACING: Beams in chevron, or V-braced, bays are capable of resisting the vertical load resulting from the simultaneous yielding and buckling of the brace pairs. (Commentary: Sec. A.3.3.2.3. Tier 2: Sec. 5.5.4.6)

CONCENTRICALLY BRACED FRAME JOINTS: All the diagonal braces frame into the beam–column joints concentrically. (Commentary: Sec. A.3.3.2.4. Tier 2: Sec. 5.5.4.8)

COUPLING BEAMS: The stirrups in coupling beams over means of egress are spaced at or less than $d/2$ and are anchored into the confined core of the beam with hooks of 135 degrees or more. All coupling beams shall comply with the requirements above and shall have the capacity in shear to develop the uplift capacity of the adjacent wall. (Commentary: Sec. A3.2.2.3. Tier 2: Sec. 5.5.3.2.1)

OVERTURNING: All shear walls have aspect ratios less than 4-to-1. Wall piers need not be considered. (Commentary: Sec. A.3.2.2.4. Tier 2: Sec. 5.5.3.1.4)

CONFINEMENT REINFORCING: For shear walls with aspect ratios greater than 2-to-1, the boundary elements are confined with spirals or ties with spacing less than $8d_b$. (Commentary: Sec. A.3.2.2.5. Tier 2: Sec. 5.5.3.2.2)

WALL REINFORCING AT OPENINGS: There is added trim reinforcement around all wall openings with a dimension greater than three times the thickness of the wall. (Commentary: Sec. A.3.2.2.6. Tier 2: Sec. 5.5.3.1.5)

WALL THICKNESS: Thicknesses of bearing walls is not less than 1/25 the unsupported height or length, whichever is shorter, nor less than 4 in. (Commentary: Sec. A.3.2.2.7. Tier 2: Sec. 5.5.3.1.2)

Diaphragms OPENINGS AT SHEAR WALLS: Diaphragm openings immediately adjacent to the shear walls are less than 15% of the wall length. (Commentary: Sec. A.4.1.4. Tier 2: Sec. 5.6.1.3)

OPENINGS AT FRAMES: Diaphragm openings immediately adjacent to the braced frames or moment frames extend less than 15% of the frame length. (Commentary: Sec. A.4.1.5. Tier 2: Sec. 5.6.1.3)

PLAN IRREGULARITIES: There is tensile capacity to develop the strength of the diaphragm at reentrant corners or other locations of plan irregularities. (Commentary: Sec. A.4.1.7. Tier 2: Sec. 5.6.1.4)

DIAPHRAGM REINFORCEMENT AT OPENINGS: There is reinforcing around all diaphragm openings larger than 50% of the building width in either major plan dimension. (Commentary: Sec. A.4.1.8. Tier 2: Sec. 5.6.1.5)

DIAPHRAGM CONTINUITY: The diaphragms are not composed of split-level floors and do not have expansion joints. (Commentary: Sec. A.4.1.1. Tier 2: Sec. 5.6.1.1)

High Seismicity (Complete the Following Items in Addition to the Items for Very Low, Low, and Moderate Seismicity)

Seismic-Force-Resisting System MOMENT-RESISTING CONNECTIONS: All moment connections are able to develop the strength of the adjoining members or panel zones based on 110% of the expected yield stress of the steel per AISC 341, Section A3.2. (Commentary: Sec. A.3.1.3.4. Tier 2: Sec. 5.5.2.2.1)

COMPACT MEMBERS: All moment and braced frame columns and beams shall meet section requirements set forth by AISC 341, Table D1.1, for highly ductile members. Braced frame beams meet section requirements for moderately ductile members (Commentary: Secs. A.3.3.1.7 and A3.3.1.8. Tier 2: Secs. 5.5.2.2.4 and 5.5.4)

CONNECTION STRENGTH: All the brace connections develop the yield capacity of the diagonals. (Commentary: Sec. A.3.3.1.5. Tier 2: Sec. 5.5.4.4)

Connections STEEL COLUMNS: The columns in seismic-force-resisting frames are anchored to the building foundation, and the anchorage is able to develop the least of the tensile capacity of the column, the tensile capacity of the lowest level column splice (if any), or the uplift capacity of the foundation. (Commentary: Sec. A.5.3.1. Tier 2: Sec. 5.7.3.1)

16.8LS LIFE SAFETY STRUCTURAL CHECKLIST FOR BUILDING TYPES S5: STEEL FRAMES WITH INFILL MASONRY SHEAR WALLS AND STIFF DIAPHRAGMS AND S5A: STEEL FRAMES WITH INFILL MASONRY SHEAR WALLS AND FLEXIBLE DIAPHRAGMS

This Life Safety Checklist shall be completed where required by Table 4-7 and where the building configuration complies with the description of S5 or S5a building type defined in Table 3-1. Tier 1 screening shall include on-site investigation and condition assessment as required by Section 4.2.1.

Each of the evaluation statements in this checklist shall be marked Compliant (C), Noncompliant (NC), Not Applicable (N/A), or Unknown (U) for a Tier 1 screening. Compliant statements identify issues that are acceptable according to the criteria of this standard, whereas noncompliant and unknown statements identify issues that require further investigation. Certain statements may not apply to the buildings being evaluated. For noncompliant and unknown evaluation statements, the user may choose to conduct further investigation using the corresponding Tier 2 evaluation procedure; corresponding section numbers are in parentheses after each evaluation statement.

C16.8LS LIFE SAFETY STRUCTURAL CHECKLIST FOR BUILDING TYPES S5: STEEL FRAMES WITH INFILL MASONRY SHEAR WALLS AND STIFF DIAPHRAGMS AND S5A: STEEL FRAMES WITH INFILL MASONRY SHEAR WALLS AND FLEXIBLE DIAPHRAGMS

Building Type S5: Steel Frames with Infill Masonry Shear Walls and Stiff Diaphragms This is an older type of building construction that consists of a frame assembly of steel beams and steel columns. The floor and roof diaphragms consist of cast-in-place concrete slabs or metal deck with concrete fill and are stiff relative to the walls. Framing consists of steel beams, open web joists, or steel trusses. Walls consist of infill panels constructed of solid clay brick, concrete block, or hollow-clay tile masonry. Infill walls may completely encase the frame members and present a smooth masonry exterior with no indication of the frame. The seismic performance of this type of construction depends on the interaction between the frame and infill panels. The combined behavior is more like a shear wall structure than a frame structure. Solidly infilled masonry panels form diagonal compression struts between the intersections of the frame members. If the walls are offset from the frame and do not fully engage the frame members, the diagonal compression struts do not develop. The strength of the infill panel is limited by the shear capacity of the masonry bed joint or the compression capacity of the strut. The postcracking strength is determined by an analysis of a moment frame that is partially restrained by the cracked infill.

Building Type S5a: Steel Frames with Infill Masonry Shear Walls and Flexible Diaphragms These buildings are similar to building type S5 except that diaphragms consist of wood framing; untopped metal deck; or metal deck with lightweight insulating concrete, poured gypsum, or similar nonstructural topping and are flexible relative to the walls.

Low Seismicity

Seismic-Force-Resisting System SHEAR STRESS CHECK: The shear stress in the reinforced masonry shear walls, calculated using the Quick Check procedure of Section 4.5.3.3, is less than 70 lb/in.^{2} (Commentary: Sec. A.3.2.4.1. Tier 2: Sec. 5.5.3.1.1)

SHEAR STRESS CHECK: The shear stress in the unreinforced masonry shear walls, calculated using the Quick Check procedure of Section 4.5.3.3, is less than 30 lb/in.^{2} for clay units and 70 lb/in.^{2} for concrete units. Bays with openings greater than 25% of the wall area shall not be included in A_w of Eq. (4-9). (Commentary: Sec. A.3.2.5.1. Tier 2: Sec. 5.5.3.1.1)

INFILL WALL CONNECTIONS: Masonry is in full contact with frame. (Commentary: Sec. A.3.2.6.1. Tier 2: Secs. 5.5.3.5.1 and 5.5.3.5.3)

Connections STEEL COLUMNS: The columns in seismic-force-resisting frames are anchored to the building foundation. (Commentary: Sec. A.5.3.1. Tier 2: Sec. 5.7.3.1)

Moderate Seismicity (Complete the Following Items in Addition to the Items for Low Seismicity)

Seismic-Force-Resisting System REDUNDANCY: The number of lines of shear walls in each principal direction is greater than or equal to 2. (Commentary: Sec. A.3.2.1.1. Tier 2: Sec. 5.5.1.1)

INFILL WALL ECCENTRICITY: The centerline of the infill masonry wall is not offset from the centerline of the steel framing by more than 25% of the wall thickness. (Commentary: Sec. A.3.2.6.5. Tier 2: Sec. 5.5.3.5.3)

Connections TRANSFER TO INFILL WALLS: Diaphragms are connected for transfer of loads to the infill walls. (Commentary: Sec. A.5.2.1. Tier 2: Sec. 5.7.2)

High Seismicity (Complete the Following Items in Addition to the Items for Low and Moderate Seismicity)

Seismic-Force-Resisting System PROPORTIONS: The height-to-thickness ratio of the unreinforced infill walls at each story is less than 9. (Commentary: Sec. A.3.2.6.2. Tier 2: Sec. 5.5.3.1.2)

CAVITY WALLS: The infill walls are not of cavity construction. (Commentary: Sec. A.3.2.6.3. Tier 2: Sec. 5.5.3.5.2)

Flexible Diaphragms CROSS TIES: There are continuous cross ties between diaphragm chords. (Commentary: Sec. A.4.1.2. Tier 2: Sec. 5.6.1.2)

STRAIGHT SHEATHING: All straight sheathed diaphragms have aspect ratios less than 2-to-1 in the direction being considered. (Commentary: Sec. A.4.2.1. Tier 2: Sec. 5.6.2)

SPANS: All wood diaphragms with spans greater than 24 ft consist of wood structural panels or diagonal sheathing. (Commentary: Sec. A.4.2.2. Tier 2: Sec. 5.6.2)

DIAGONALLY SHEATHED AND UNBLOCKED DIAPHRAGMS: All diagonally sheathed or unblocked wood structural panel diaphragms have horizontal spans less than 40 ft and aspect ratios less than or equal to 4-to-1. (Commentary: Sec. A.4.2.3. Tier 2: Sec. 5.6.2)

OTHER DIAPHRAGMS: The diaphragm does not consist of a system other than wood, metal deck, concrete, or horizontal bracing. (Commentary: Sec. A.4.7.1. Tier 2: Sec. 5.6.5)

Connections STIFFNESS OF WALL ANCHORS: Anchors of concrete or masonry walls to wood structural elements are installed taut and are stiff enough to limit the relative movement between the wall and the diaphragm to no greater than 1/8 in. before engagement of the anchors. (Commentary: Sec. A.5.1.4. Tier 2: Sec. 5.7.1.2)

16.8IO IMMEDIATE OCCUPANCY STRUCTURAL CHECKLIST FOR BUILDING TYPES S5: STEEL FRAMES WITH INFILL MASONRY SHEAR WALLS AND STIFF DIAPHRAGMS AND S5A: STEEL FRAMES WITH INFILL MASONRY SHEAR WALLS AND FLEXIBLE DIAPHRAGMS

This Immediate Occupancy Checklist shall be completed where required by Table 4-7 and where the building configuration complies with the description of S5 or S5a building type defined in Table 3-1. Tier 1 screening shall include on-site investigation and condition assessment as required by Section 4.2.1.

Each of the evaluation statements in this checklist shall be marked Compliant (C), Noncompliant (NC), Not Applicable (N/A), or Unknown (U) for a Tier 1 screening. Compliant statements identify issues that are acceptable according to the criteria of this standard, whereas noncompliant and unknown statements identify issues that require further investigation. Certain statements may not apply to the buildings being evaluated. For noncompliant and unknown evaluation statements, the user may choose to conduct further investigation using the corresponding Tier 2 evaluation procedure; corresponding section numbers are in parentheses after each evaluation statement.

C16.8IO IMMEDIATE OCCUPANCY STRUCTURAL CHECKLIST FOR BUILDING TYPES S5: STEEL FRAMES WITH INFILL MASONRY SHEAR WALLS AND STIFF DIAPHRAGMS AND S5A: STEEL FRAMES WITH INFILL MASONRY SHEAR WALLS AND FLEXIBLE DIAPHRAGMS

Building Type S5: Steel Frames with Infill Masonry Shear Walls and Stiff Diaphragms This is an older type of building construction that consists of a frame assembly of steel beams and steel columns. The floor and roof diaphragms consist of cast-in-place concrete slabs or metal deck with concrete fill and are stiff relative to the walls. Framing consists of steel beams, open web joists, or steel trusses. Walls consist of infill panels constructed of solid clay brick, concrete block, or hollow-clay tile masonry. Infill walls may completely encase the frame members and present a smooth masonry exterior with no indication of the frame. The seismic performance of this type of construction depends on the interaction between the frame and infill panels. The combined behavior is more like a shear wall structure than a frame structure. Solidly infilled masonry panels form diagonal compression struts between the intersections of the frame members. If the walls are offset from the frame and do not fully engage the frame members, the diagonal compression struts do not develop. The strength of the infill panel is limited by the shear capacity of the masonry bed joint or the compression capacity of the strut. The postcracking strength is determined by an analysis of a moment frame that is partially restrained by the cracked infill.

Building Type S5a: Steel Frames with Infill Masonry Shear Walls and Flexible Diaphragms These buildings are similar to building type S5 except that diaphragms consist of wood framing;

untopped metal deck; or metal deck with lightweight insulating concrete, poured gypsum, or similar nonstructural topping and are flexible relative to the walls.

Very Low and Low Seismicity

Seismic-Force-Resisting System SHEAR STRESS CHECK: The shear stress in the reinforced masonry shear walls, calculated using the Quick Check procedure of Section 4.5.3.3, is less than 70 lb/in.^{2} (Commentary: Sec. A.3.2.4.1. Tier 2: Sec. 5.5.3.1.1)

SHEAR STRESS CHECK: The shear stress in the unreinforced masonry shear walls, calculated using the Quick Check procedure of Section 4.5.3.3, is less than 30 lb/in.^{2} for clay units and 70 lb/in.^{2} for concrete units. Bays with openings greater than 25% of the wall area shall not be included in A_w of Eq. (4-9). (Commentary: Sec. A.3.2.5.1. Tier 2: Sec. 5.5.3.1.1)

INFILL WALL CONNECTIONS: Masonry is in full contact with frame. (Commentary: Sec. A.3.2.6.1. Tier 2: Secs. 5.5.3.5.1 and 5.5.3.5.3)

Connections STEEL COLUMNS: The columns in seismic-force-resisting frames are anchored to the building foundation. (Commentary: Sec. A.5.3.1. Tier 2: Sec. 5.7.3.1)

Moderate Seismicity (Complete the Following Items in Addition to the Items for Very Low and Low Seismicity)

Seismic-Force-Resisting System REDUNDANCY: The number of lines of shear walls in each principal direction is greater than or equal to 2. (Commentary: Sec. A.3.2.1.1. Tier 2: Sec. 5.5.1.1)

REINFORCING AT WALL OPENINGS: All wall openings that interrupt rebar have trim reinforcing on all sides or are checked as unreinforced infill frames. (Commentary: Sec. A.3.2.4.3. Tier 2: Sec. 5.5.3.1.5)

PROPORTIONS: The height-to-thickness ratio of the unreinforced infill walls at each story is less than 13. (Commentary: Sec. A.3.2.6.2. Tier 2: Sec. 5.5.3.1.2)

CAVITY WALLS: The infill walls are not of cavity construction. (Commentary: Sec. A.3.2.6.3. Tier 2: Sec. 5.5.3.5.2)

INFILL WALL ECCENTRICITY: The centerline of the infill masonry wall is not offset from the centerline of the steel framing by more than 25% of the wall thickness. (Commentary: Sec. A.3.2.6.5. Tier 2: Sec. 5.5.3.5.3)

Connections TRANSFER TO SHEAR WALLS: Diaphragms are connected for transfer of loads to the shear walls, and the connections are able to develop the lesser of the shear strength of the walls or diaphragms. (Commentary: Sec. A.5.2.1. Tier 2: Sec. 5.7.2)

Diaphragms (Stiff or Flexible) PLAN IRREGULARITIES: There is tensile capacity to develop the strength of the diaphragm at reentrant corners or other locations of plan irregularities. (Commentary: Sec. A.4.1.7. Tier 2: Sec. 5.6.1.4)

DIAPHRAGM REINFORCEMENT AT OPENINGS: There is reinforcing around all diaphragm openings larger than 50% of the building width in either major plan dimension. (Commentary: Sec. A.4.1.8. Tier 2: Sec. 5.6.1.5)

Flexible Diaphragms CROSS TIES: There are continuous cross ties between diaphragm chords. (Commentary: Sec. A.4.1.2. Tier 2: Sec. 5.6.1.2)

STRAIGHT SHEATHING: All straight sheathed diaphragms have aspect ratios less than 1-to-1 in the direction being considered. (Commentary: Sec. A.4.2.1. Tier 2: Sec. 5.6.2)

SPANS: All wood diaphragms with spans greater than 12 ft consist of wood structural panels or diagonal sheathing. (Commentary: Sec. A.4.2.2. Tier 2: Sec. 5.6.2)

DIAGONALLY SHEATHED AND UNBLOCKED DIAPHRAGMS: All diagonally sheathed or unblocked wood structural panel diaphragms have horizontal spans less than 30 ft and aspect ratios less than or equal to 3-to-1. (Commentary: Sec. A.4.2.3. Tier 2: Sec. 5.6.2)

NONCONCRETE FILLED DIAPHRAGMS: Untopped metal deck diaphragms or metal deck diaphragms with fill other than concrete consist of horizontal spans of less than 40 ft and have aspect ratios less than 4-to-1. (Commentary: Sec. A.4.3.1. Tier 2: Sec. 5.6.3)

OTHER DIAPHRAGMS: The diaphragm does not consist of a system other than wood, metal deck, concrete, or horizontal bracing. (Commentary: Sec. A.4.7.1. Tier 2: Sec. 5.6.5)

Connections STIFFNESS OF WALL ANCHORS: Anchors of concrete or masonry walls to wood structural elements are installed taut and are stiff enough to limit the relative movement between the wall and the diaphragm to no greater than 1/8 in. before engagement of the anchors. (Commentary: Sec. A.5.1.4. Tier 2: Sec. 5.7.1.2)

Foundation System DEEP FOUNDATIONS: Piles and piers are capable of transferring the lateral forces between the structure and the soil. (Commentary: Sec. A.6.2.3.)

SLOPING SITES: The difference in foundation embedment depth from one side of the building to another shall not exceed one story high. (Commentary: Sec. A.6.2.4)

High Seismicity (Complete the Following Items in Addition to the Items for Very Low, Low, and Moderate Seismicity)

Seismic-Force-Resisting System PROPORTIONS: The height-to-thickness ratio of the unreinforced infill walls at each story is less than 8. (Commentary: Sec. A.3.2.6.2. Tier 2: Sec. 5.5.3.1.2)

Connections STEEL COLUMNS: The columns in seismic-force-resisting frames are anchored to the building foundation, and the anchorage is able to develop the least of the tensile capacity of the column, the tensile capacity of the lowest level column splice (if any), or the uplift capacity of the foundation. (Commentary: Sec. A.5.3.1. Tier 2: Sec. 5.7.3.1)

16.9LS LIFE SAFETY STRUCTURAL CHECKLIST FOR BUILDING TYPE C1: CONCRETE MOMENT FRAMES

This Life Safety Structural Checklist shall be completed where required by Table 4-7 and where the building configuration complies with the description of C1 building type defined in Table 3-1. Tier 1 screening shall include on-site investigation and condition assessment as required by Section 4.2.1.

Each of the evaluation statements in this checklist shall be marked Compliant (C), Noncompliant (NC), Not Applicable (N/A), or Unknown (U) for a Tier 1 screening. Compliant statements identify issues that are acceptable according to the criteria of this standard, whereas noncompliant and unknown statements identify issues that require further investigation. Certain statements may not apply to the buildings being evaluated. For noncompliant and unknown evaluation statements, the design professional may choose to conduct further investigation using the corresponding Tier 2 evaluation procedure; corresponding section numbers are in parentheses after each evaluation statement.

C16.9LS LIFE SAFETY STRUCTURAL CHECKLIST FOR BUILDING TYPE C1: CONCRETE MOMENT FRAMES

These buildings consist of a frame assembly of cast-in-place concrete beams and columns. Floor and roof framing consists of cast-in-place concrete slabs, concrete beams, one-way joists, two-way waffle joists, or flat slabs. Seismic forces are resisted by concrete moment frames that develop their stiffness through monolithic beam–column connections. In older construction, or in Low Seismicity, the moment frames may consist of the column strips of two-way flat slab systems. Modern frames in High Seismicity have joint reinforcing, closely spaced ties, and special detailing to provide ductile performance. This detailing is not present in older construction. Foundations consist of concrete spread footings, mat foundations, or deep foundations.

Refer to Sections A.3.1 and A.3.1.4 for additional commentary related to concrete moment frames.

Low Seismicity

Seismic-Force-Resisting System REDUNDANCY: The number of lines of moment frames in each principal direction is greater than or equal to 2. The number of bays of moment frames in each line is greater than or equal to 2. (Commentary: Sec. A.3.1.1.1. Tier 2: Sec. 5.5.1.1)

COLUMN AXIAL STRESS CHECK: The axial stress caused by unfactored gravity loads in columns subjected to overturning forces because of seismic demands is less than $0.20f_c'$. Alternatively, the axial stress caused by overturning forces alone, calculated using the Quick Check procedure of Section 4.5.3.6, is less than $0.30f_c'$. (Commentary: Sec. A.3.1.4.2. Tier 2: Sec. 5.5.2.1.3)

Connections CONCRETE COLUMNS: All concrete columns are doweled into the foundation with a minimum of four bars. (Commentary: Sec. A.5.3.2. Tier 2: Sec. 5.7.3.1)

Moderate Seismicity (Complete the Following Items in Addition to the Items for Low Seismicity)

Seismic-Force-Resisting System INTERFERING WALLS: All concrete and masonry infill walls placed in moment frames are isolated from structural elements. (Commentary: Sec. A.3.1.2.1. Tier 2: Sec. 5.5.2.1.1)

COLUMN SHEAR STRESS CHECK: The shear stress in the concrete columns, calculated using the Quick Check procedure of Section 4.5.3.2, is less than the greater of 100 lb/in.^{2} or $2\sqrt{f_c'}$. (Commentary: Sec. A.3.1.4.1. Tier 2: Sec. 5.5.2.1.4)

FLAT SLAB FRAMES: The seismic-force-resisting system is not a frame consisting of columns and a flat slab or plate without beams. (Commentary: Sec. A.3.1.4.3. Tier 2: Sec. 5.5.2.3.1)

High Seismicity (Complete the Following Items in Addition to the Items for Low and Moderate Seismicity)

Seismic-Force-Resisting System PRESTRESSED FRAME ELEMENTS: The seismic-force-resisting frames do not include any prestressed or posttensioned elements where the average prestress exceeds the lesser of 700 lb/in.^{2} or $f_c'/6$ at potential hinge locations. The average prestress is calculated in accordance with the Quick Check procedure of Section 4.5.3.8. (Commentary: Sec. A.3.1.4.4. Tier 2: Sec. 5.5.2.3.2)

CAPTIVE COLUMNS: There are no columns at a level with height/depth ratios less than 50% of the nominal height/depth ratio of the typical columns at that level. (Commentary: Sec. A.3.1.4.5. Tier 2: Sec. 5.5.2.3.3)

NO SHEAR FAILURES: The shear capacity of frame members is able to develop the moment capacity at the ends of the members. (Commentary: Sec. A.3.1.4.6. Tier 2: Sec. 5.5.2.3.4)

STRONG COLUMN—WEAK BEAM: The sum of the moment capacity of the columns is 20% greater than that of the beams at frame joints. (Commentary: Sec. A.3.1.4.7. Tier 2: Sec. 5.5.2.1.5)

BEAM BARS: At least two longitudinal top and two longitudinal bottom bars extend continuously throughout the length of each frame beam. At least 25% of the longitudinal bars provided at the joints for either positive or negative moment are continuous throughout the length of the members. (Commentary: A.3.1.4.8. Tier 2: Sec. 5.5.2.3.5)

COLUMN-BAR SPLICES: All column-bar lap splice lengths are greater than $35d_b$ and are enclosed by ties spaced at or less than $8d_b$. Alternatively, column bars are spliced with mechanical couplers with a capacity of at least 1.25 times the nominal yield strength of the spliced bar. (Commentary: Sec. A.3.1.4.9. Tier 2: Sec. 5.5.2.3.6)

BEAM-BAR SPLICES: The lap splices or mechanical couplers for longitudinal beam reinforcing are not located within $l_b/4$ of the joints and are not located in the vicinity of potential plastic hinge locations. (Commentary: Sec. A.3.1.4.10. Tier 2: Sec. 5.5.2.3.6)

COLUMN-TIE SPACING: Frame columns have ties spaced at or less than $d/4$ throughout their length and at or less than $8d_b$ at all potential plastic hinge locations. (Commentary: Sec. A.3.1.4.11. Tier 2: Sec. 5.5.2.3.7)

STIRRUP SPACING: All beams have stirrups spaced at or less than $d/2$ throughout their length. At potential plastic hinge locations, stirrups are spaced at or less than the minimum of $8d_b$ or $d/4$. (Commentary: Sec. A.3.1.4.12. Tier 2: Sec. 5.5.2.3.7)

JOINT TRANSVERSE REINFORCING: Beam–column joints have ties spaced at or less than $8d_b$. (Commentary: Sec. A.3.1.4.13. Tier 2: Sec. 5.5.2.3.8)

DEFLECTION COMPATIBILITY: Secondary components have the shear capacity to develop the flexural strength of the components. (Commentary: Sec. A.3.1.6.2. Tier 2: Sec. 5.5.2.5.2)

FLAT SLABS: Flat slabs or plates not part of the seismic-force-resisting system have continuous bottom steel through the column joints. (Commentary: Sec. A.3.1.6.3. Tier 2: Sec. 5.5.2.5.3)

Diaphragms DIAPHRAGM CONTINUITY: The diaphragms are not composed of split-level floors and do not have expansion joints. (Commentary: Sec. A.4.1.1. Tier 2: Sec. 5.6.1.1)

Connections UPLIFT AT PILE CAPS: Pile caps have top reinforcement, and piles are anchored to the pile caps. (Commentary: Sec. A.5.3.8. Tier 2: Sec. 5.7.3.5)

16.9IO IMMEDIATE OCCUPANCY STRUCTURAL CHECKLIST FOR BUILDING TYPE C1: CONCRETE MOMENT FRAMES

This Immediate Occupancy Structural Checklist shall be completed where required by Table 4-7 and where the building configuration complies with the description of C1 building type defined in Table 3-1. Tier 1 screening shall include on-site investigation and condition assessment as required by Section 4.2.1.

Each of the evaluation statements in this checklist shall be marked Compliant (C), Noncompliant (NC), Not Applicable (N/A), or Unknown (U) for a Tier 1 screening. Compliant statements identify issues that are acceptable according to the criteria of this standard, whereas noncompliant and unknown statements identify issues that require further investigation. Certain statements may not apply to the buildings being evaluated. For noncompliant and unknown evaluation statements, the design professional may choose to conduct further investigation using the corresponding Tier 2 evaluation procedure; corresponding

section numbers are in parentheses after each evaluation statement.

C16.9IO IMMEDIATE OCCUPANCY STRUCTURAL CHECKLIST FOR BUILDING TYPE C1: CONCRETE MOMENT FRAMES

These buildings consist of a frame assembly of cast-in-place concrete beams and columns. Floor and roof framing consists of cast-in-place concrete slabs, concrete beams, one-way joists, two-way waffle joists, or flat slabs. Seismic forces are resisted by concrete moment frames that develop their stiffness through monolithic beam–column connections. In older construction, or in Low Seismicity, the moment frames may consist of the column strips of two-way flat slab systems. Modern frames in High Seismicity have joint reinforcing, closely spaced ties, and special detailing to provide ductile performance. This detailing is not present in older construction. Foundations consist of concrete spread footings, mat foundations, or deep foundations.

Refer to Sections A.3.1 and A.3.1.4 for additional commentary related to concrete moment frames.

Very Low Seismicity

Seismic-Force-Resisting System REDUNDANCY: The number of lines of moment frames in each principal direction is greater than or equal to 2. The number of bays of moment frames in each line is greater than or equal to 3. (Commentary: Sec. A.3.1.1.1. Tier 2: Sec. 5.5.1.1)

INTERFERING WALLS: All concrete and masonry infill walls placed in moment frames are isolated from structural elements. (Commentary: Sec. A.3.1.2.1. Tier 2: Sec. 5.5.2.1.1)

COLUMN SHEAR STRESS CHECK: The shear stress in the concrete columns, calculated using the Quick Check procedure of Section 4.5.3.2, is less than the greater of 100 lb/in.^{2} or $2\sqrt{f_c'}$. (Commentary: Sec. A.3.1.4.1. Tier 2: Sec. 5.5.2.1.4)

COLUMN AXIAL STRESS CHECK: The axial stress caused by unfactored gravity loads in columns subjected to overturning demands is less than $0.13f_c'$. Alternatively, the axial stress caused by overturning forces alone, calculated using the Quick Check procedure of Section 4.5.3.6, is less than $0.30f_c'$. (Commentary: Sec. A.3.1.4.2. Tier 2: Sec. 5.5.2.1.3)

Connections CONCRETE COLUMNS: All concrete columns are doweled into the foundation, and the dowels are able to develop the tensile capacity of reinforcement in columns of the seismic-force-resisting system. (Commentary: Sec. A.5.3.2. Tier 2: Sec. 5.7.3.1)

Low and Moderate Seismicity (Complete the Following Items in Addition to the Items for Very Low Seismicity)

Seismic-Force-Resisting System FLAT SLAB FRAMES: The seismic-force-resisting system is not a frame consisting of columns and a flat slab or plate without beams. (Commentary: Sec. A.3.1.4.3. Tier 2: Sec. 5.5.2.3.1)

PRESTRESSED FRAME ELEMENTS: The seismic-force-resisting frames shall not include any prestressed or posttensioned elements where the average prestress exceeds the lesser of 700 lb/in.^{2} or $f_c'/6$ at potential hinge locations. The average prestress is calculated in accordance with the Quick Check procedure of Section 4.5.3.8. (Commentary: Sec. A.3.1.4.4. Tier 2: Sec. 5.5.2.3.2)

CAPTIVE COLUMNS: There are no columns at a level with height/depth ratios less than 75% of the nominal height/depth ratio of the typical columns at that level. (Commentary: Sec. A.3.1.4.5. Tier 2: Sec. 5.5.2.3.3)

NO SHEAR FAILURES: The shear capacity of frame members is able to develop the moment capacity at the ends of the members. (Commentary: Sec. A.3.1.4.6. Tier 2: Sec. 5.5.2.3.4)

STRONG COLUMN—WEAK BEAM: The sum of the moment capacity of the columns is 20% greater than that of the beams at frame joints. (Commentary: Sec. A.3.1.4.7. Tier 2: Sec. 5.5.2.1.5)

BEAM BARS: At least two longitudinal top and two longitudinal bottom bars extend continuously throughout the length of each frame beam. At least 25% of the longitudinal bars provided at the joints for either positive or negative moment are continuous throughout the length of the members. (Commentary: Sec. A.3.1.4.8. Tier 2: Sec. 5.5.2.3.5)

COLUMN-BAR SPLICES: All column-bar lap splice lengths are greater than $50d_b$ and are enclosed by ties spaced at or less than $8d_b$. Alternatively, column bars are spliced with mechanical couplers with a capacity of at least 1.25 times the nominal yield strength of the spliced bar. (Commentary: Sec. A.3.1.4.9. Tier 2: Sec. 5.5.2.3.6)

BEAM-BAR SPLICES: The lap splices or mechanical couplers for longitudinal beam reinforcing are not located within $l_b/4$ of the joints and shall not be located in the vicinity of potential plastic hinge locations. (Commentary: Sec. A.3.1.4.10. Tier 2: Sec. 5.5.2.3.6)

COLUMN-TIE SPACING: Frame columns have ties spaced at or less than $d/4$ throughout their length and at or less than $8d_b$ at all potential plastic hinge locations. (Commentary: Sec. A.3.1.4.11. Tier 2: Sec. 5.5.2.3.7)

STIRRUP SPACING: All beams have stirrups spaced at or less than $d/2$ throughout their length. At potential plastic hinge locations, stirrups are spaced at or less than the minimum of $8d_b$ or $d/4$. (Commentary: Sec. A.3.1.4.12. Tier 2: Sec. 5.5.2.3.7)

JOINT TRANSVERSE REINFORCING: Beam–column joints have ties spaced at or less than $8d_b$. (Commentary: Sec. A.3.1.4.13. Tier 2: Sec. 5.5.2.3.8)

JOINT ECCENTRICITY: There are no eccentricities larger than 20% of the smallest column plan dimension between girder and column centerlines. (Commentary: Sec. A.3.1.4.14. Tier 2: Sec. 5.5.2.3.9)

STIRRUP AND TIE HOOKS: The beam stirrups and column ties are anchored into the member cores with hooks of 135 degrees or more. (Commentary: Sec. A.3.1.4.15. Tier 2: Sec. 5.5.2.3.10)

DEFLECTION COMPATIBILITY: Secondary components have the shear capacity to develop the flexural strength of the components and are Compliant with the following items: COLUMN-BAR SPLICES, BEAM-BAR SPLICES, COLUMN-TIE SPACING, STIRRUP SPACING, and STIRRUP AND TIE HOOKS. (Commentary: Sec. A.3.1.6.2. Tier 2: Sec. 5.5.2.5.2)

FLAT SLABS: Flat slabs or plates not part of the seismic-force-resisting system have continuous bottom steel through the column joints. (Commentary: Sec. A.3.1.6.3. Tier 2: Sec. 5.5.2.5.3)

Diaphragms DIAPHRAGM CONTINUITY: The diaphragms are not composed of split-level floors and do not have expansion joints. (Commentary: Sec. A.4.1.1. Tier 2: Sec. 5.6.1.1)

PLAN IRREGULARITIES: There is tensile capacity to develop the strength of the diaphragm at reentrant corners or other locations of plan irregularities. (Commentary: Sec. A.4.1.7. Tier 2: Sec. 5.6.1.4)

DIAPHRAGM REINFORCEMENT AT OPENINGS: There is reinforcing around all diaphragm openings larger than 50% of the building width in either major plan dimension. (Commentary: Sec. A.4.1.8. Tier 2: Sec. 5.6.1.5)

Connections UPLIFT AT PILE CAPS: Pile caps have top reinforcement, and piles are anchored to the pile caps; the pile cap reinforcement and pile anchorage are able to develop the tensile capacity of the piles. (Commentary: Sec. A.5.3.8. Tier 2: Sec. 5.7.3.5)

16.10LS LIFE SAFETY STRUCTURAL CHECKLIST FOR BUILDING TYPES C2: CONCRETE SHEAR WALLS WITH STIFF DIAPHRAGMS AND C2A: CONCRETE SHEAR WALLS WITH FLEXIBLE DIAPHRAGMS

This Life Safety Structural Checklist shall be completed where required by Table 4-7 and where the building configuration complies with the description of C2 or C2a building type defined in Table 3-1. Tier 1 screening shall include on-site investigation and condition assessment as required by Section 4.2.1.

Each of the evaluation statements in this checklist shall be marked Compliant (C), Noncompliant (NC), Not Applicable (N/A), or Unknown (U) for a Tier 1 screening. Compliant statements identify issues that are acceptable according to the criteria of this standard, whereas noncompliant and unknown statements identify issues that require further investigation. Certain statements may not apply to the buildings being evaluated. For noncompliant and unknown evaluation statements, the design professional may choose to conduct further investigation using the corresponding Tier 2 evaluation procedure; corresponding section numbers are in parentheses after each evaluation statement.

C16.10LS LIFE SAFETY STRUCTURAL CHECKLIST FOR BUILDING TYPES C2: CONCRETE SHEAR WALLS WITH STIFF DIAPHRAGMS AND C2A: CONCRETE SHEAR WALLS WITH FLEXIBLE DIAPHRAGMS

Building Type C2: Concrete Shear Walls with Stiff Diaphragms These buildings have floor and roof framing that consists of cast-in-place concrete slabs, concrete beams, one-way joists, two-way waffle joists, or flat slabs. Floors are supported on steel beams and columns or on concrete beams and columns or bearing walls. Seismic forces are resisted by cast-in-place concrete shear walls. In older construction, shear walls are lightly reinforced but often extend throughout the building. In more recent construction, shear walls occur in isolated locations and are more heavily reinforced with boundary elements and closely spaced ties to provide ductile performance. The diaphragms consist of concrete slabs and are stiff relative to the walls. Foundations consist of concrete spread footings, mat foundations, or deep foundations.

Building Type C2a: Concrete Shear Walls with Flexible Diaphragms These buildings are similar to building type C2 except that the diaphragms consist of wood sheathing; untopped metal deck; or metal deck with lightweight insulating concrete, poured gypsum, or similar nonstructural topping or have large aspect ratios and are flexible relative to the walls.

Refer to Sections A.3.2.1 and A3.2.2 for additional commentary related to concrete shear walls.

Low and Moderate Seismicity

Seismic-Force-Resisting System COMPLETE FRAMES: Steel or concrete frames classified as secondary components form a complete vertical-load-carrying system. (Commentary: Sec. A.3.1.6.1. Tier 2: Sec. 5.5.2.5.1)

REDUNDANCY: The number of lines of shear walls in each principal direction is greater than or equal to 2. (Commentary: Sec. A.3.2.1.1. Tier 2: Sec. 5.5.1.1)

SHEAR STRESS CHECK: The shear stress in the concrete shear walls, calculated using the Quick Check procedure of Section 4.5.3.3, is less than the greater of 100 lb/in.^{2} or $2\sqrt{f_c'}$. (Commentary: Sec. A.3.2.2.1. Tier 2: Sec. 5.5.3.1.1)

REINFORCING STEEL: The ratio of reinforcing steel area to gross concrete area is not less than 0.0012 in the vertical direction and 0.0020 in the horizontal direction. (Commentary: Sec. A.3.2.2.2. Tier 2: Sec. 5.5.3.1.3)

Connections WALL ANCHORAGE AT FLEXIBLE DIAPHRAGMS: Exterior concrete or masonry walls that are dependent on flexible diaphragms for lateral support are anchored for out-of-plane forces at each diaphragm level with steel anchors, reinforcing dowels, or straps that are developed into the diaphragm. Connections have adequate strength to resist the connection force calculated in the Quick Check procedure of Section 4.5.3.7. (Commentary: Sec. A.5.1.1. Tier 2: Sec. 5.7.1.1)

TRANSFER TO SHEAR WALLS: Diaphragms are connected for transfer of seismic forces to the shear walls. (Commentary: Sec. A.5.2.1. Tier 2: Sec. 5.7.2)

FOUNDATION DOWELS: Wall reinforcement is doweled into the foundation with vertical bars equal in size and spacing to the vertical wall reinforcing immediately above the foundation. (Commentary: Sec. A.5.3.5. Tier 2: Sec. 5.7.3.4)

High Seismicity (Complete the Following Items in Addition to the Items for Low and Moderate Seismicity)

Seismic-Force-Resisting System DEFLECTION COMPATIBILITY: Secondary components have the shear capacity to develop the flexural strength of the components. (Commentary: Sec. A.3.1.6.2. Tier 2: Sec. 5.5.2.5.2)

FLAT SLABS: Flat slabs or plates not part of the seismic-force-resisting system have continuous bottom steel through the column joints. (Commentary: Sec. A.3.1.6.3. Tier 2: Sec. 5.5.2.5.3)

COUPLING BEAMS: The stirrups in coupling beams over means of egress are spaced at or less than $d/2$ and are anchored into the confined core of the beam with hooks of 135 degrees or more. The ends of both walls to which the coupling beam is attached are supported at each end to resist vertical loads caused by overturning. (Commentary: Sec. A.3.2.2.3. Tier 2: Sec. 5.5.3.2.1)

Connections UPLIFT AT PILE CAPS: Pile caps have top reinforcement, and piles are anchored to the pile caps. (Commentary: Sec. A.5.3.8. Tier 2: Sec. 5.7.3.5)

Diaphragms (Flexible or Stiff) DIAPHRAGM CONTINUITY: The diaphragms are not composed of split-level floors and do not have expansion joints. (Commentary: Sec. A.4.1.1. Tier 2: Sec. 5.6.1.1)

OPENINGS AT SHEAR WALLS: Diaphragm openings immediately adjacent to the shear walls are less than 25% of the wall length. (Commentary: Sec. A.4.1.4. Tier 2: Sec. 5.6.1.3)

Flexible Diaphragms CROSS TIES: There are continuous cross ties between diaphragm chords. (Commentary: Sec. A.4.1.2. Tier 2: Sec. 5.6.1.2)

STRAIGHT SHEATHING: All straight sheathed diaphragms have aspect ratios less than 2-to-1 in the direction being considered. (Commentary: Sec. A.4.2.1. Tier 2: Sec. 5.6.2)

SPANS: All wood diaphragms with spans greater than 24 ft consist of wood structural panels or diagonal sheathing. (Commentary: Sec. A.4.2.2. Tier 2: Sec. 5.6.2)

DIAGONALLY SHEATHED AND UNBLOCKED DIAPHRAGMS: All diagonally sheathed or unblocked wood structural panel diaphragms have horizontal spans less than 40 ft and aspect ratios less than or equal to 4-to-1. (Commentary: Sec. A.4.2.3. Tier 2: Sec. 5.6.2)

OTHER DIAPHRAGMS: The diaphragm does not consist of a system other than wood, metal deck, concrete, or horizontal bracing. (Commentary: Sec. A.4.7.1. Tier 2: Sec. 5.6.5)

16.10IO IMMEDIATE OCCUPANCY STRUCTURAL CHECKLIST FOR BUILDING TYPES C2: CONCRETE SHEAR WALLS WITH STIFF DIAPHRAGMS AND C2A: CONCRETE SHEAR WALLS WITH FLEXIBLE DIAPHRAGMS

This Immediate Occupancy Structural Checklist shall be completed where required by Table 4-7 and where the building configuration complies with the description of C2 or C2a building type defined in Table 3-1. Tier 1 screening shall include on-site investigation and condition assessment as required by Section 4.2.1.

Each of the evaluation statements in this checklist shall be marked Compliant (C), Noncompliant (NC), Not Applicable (N/A), or Unknown (U) for a Tier 1 screening. Compliant statements identify issues that are acceptable according to the criteria of this standard, whereas noncompliant and unknown statements identify issues that require further investigation. Certain statements may not apply to the buildings being evaluated. For noncompliant and unknown evaluation statements, the design professional may choose to conduct further investigation using the corresponding Tier 2 evaluation procedure; corresponding section numbers are in parentheses after each evaluation statement.

C16.10IO IMMEDIATE OCCUPANCY STRUCTURAL CHECKLIST FOR BUILDING TYPES C2: CONCRETE SHEAR WALLS WITH STIFF DIAPHRAGMS AND C2A: CONCRETE SHEAR WALLS WITH FLEXIBLE DIAPHRAGMS

Building Type C2: Concrete Shear Walls with Stiff Diaphragms These buildings have floor and roof framing that consists of cast-in-place concrete slabs, concrete beams, one-way joists, two-way waffle joists, or flat slabs. Floors are supported on steel beams and columns or on concrete beams and columns or bearing walls. Seismic forces are resisted by cast-in-place concrete shear walls. In older construction, shear walls are lightly reinforced but often extend throughout the building. In more recent construction, shear walls occur in isolated locations and are more heavily reinforced with boundary elements and closely spaced ties to provide ductile performance. The diaphragms consist of concrete slabs and are stiff relative to the walls. Foundations consist of concrete spread footings, mat foundations, or deep foundations.

Building Type C2a: Concrete Shear Walls with Flexible Diaphragms These buildings are similar to building type C2 except that the diaphragms consist of wood sheathing; untopped metal deck; or metal deck with lightweight insulating concrete, poured gypsum, or similar nonstructural topping, or they have large aspect ratios and are flexible relative to the walls.

Refer to Sections A.3.2.1 and A3.2.2 for additional commentary related to concrete shear walls.

Very Low Seismicity

Seismic-Force-Resisting System COMPLETE FRAMES: Steel or concrete frames classified as secondary components form a complete vertical-load-carrying system. (Commentary: Sec. A.3.1.6.1. Tier 2: Sec. 5.5.2.5.1)

REDUNDANCY: The number of lines of shear walls in each principal direction is greater than or equal to 2. (Commentary: Sec. A.3.2.1.1. Tier 2: Sec. 5.5.1.1)

SHEAR STRESS CHECK: The shear stress in the concrete shear walls, calculated using the Quick Check procedure of Section 4.5.3.3, is less than the greater of 100 lb/in.^{2} or $2\sqrt{f_c'}$. (Commentary: Sec. A.3.2.2.1. Tier 2: Sec. 5.5.3.1.1)

REINFORCING STEEL: The ratio of reinforcing steel area to gross concrete area is not less than 0.0012 in the vertical direction and 0.0020 in the horizontal direction. The spacing of reinforcing steel is equal to or less than 18 in. (Commentary: Sec. A.3.2.2.2. Tier 2: Sec. 5.5.3.1.3)

Connections WALL ANCHORAGE AT FLEXIBLE DIAPHRAGMS: Exterior concrete or masonry walls that are dependent on flexible diaphragms for lateral support are anchored for out-of-plane forces at each diaphragm level with steel anchors, reinforcing dowels, or straps that are developed into the diaphragm. Connections have adequate strength to resist the connection force calculated in the Quick Check procedure of Section 4.5.3.7. (Commentary: Sec. A.5.1.1. Tier 2: Sec. 5.7.1.1)

TRANSFER TO SHEAR WALLS: Diaphragms are connected for transfer of loads to the shear walls, and the connections are able to develop the lesser of the shear strength of the walls or diaphragms. (Commentary: Sec. A.5.2.1. Tier 2: Sec. 5.7.2)

FOUNDATION DOWELS: Wall reinforcement is doweled into the foundation, and the dowels are able to develop the lesser of the strength of the walls or the uplift capacity of the foundation. (Commentary: Sec. A.5.3.5. Tier 2: Sec. 5.7.3.4)

Foundation System DEEP FOUNDATIONS: Piles and piers are capable of transferring the lateral forces between the structure and the soil. (Commentary: Sec. A.6.2.3.)

SLOPING SITES: The difference in foundation embedment depth from one side of the building to another shall not exceed one story high. (Commentary: Sec. A.6.2.4)

Low, Moderate, and High Seismicity (Complete the Following in Addition to the Items for Very Low Seismicity)

Seismic-Force-Resisting System DEFLECTION COMPATIBILITY: Secondary components have the shear capacity to develop the flexural strength of the components and are compliant with the following items: COLUMN-BAR SPLICES, BEAM-BAR SPLICES, COLUMN-TIE SPACING, STIRRUP SPACING, and STIRRUP AND TIE HOOK in the Immediate Occupancy Structural Checklist for Building Type C1. (Commentary: Sec. A.3.1.6.2. Tier 2: Sec. 5.5.2.5.2)

FLAT SLABS: Flat slabs or plates not part of seismic-force-resisting system have continuous bottom steel through the column joints. (Commentary: Sec. A.3.1.6.3. Tier 2: Sec. 5.5.2.5.3)

COUPLING BEAMS: The stirrups in coupling beams over means of egress are spaced at or less than $d/2$ and are anchored into the confined core of the beam with hooks of 135 degrees or more. The ends of both walls to which the coupling beam is

attached are supported at each end to resist vertical loads caused by overturning. Coupling beams have the capacity in shear to develop the uplift capacity of the adjacent wall. (Commentary: Sec. A.3.2.2.3. Tier 2: Sec. 5.5.3.2.1)

OVERTURNING: All shear walls have aspect ratios less than 4-to-1. Wall piers need not be considered. (Commentary: Sec. A.3.2.2.4. Tier 2: Sec. 5.5.3.1.4)

CONFINEMENT REINFORCING: For shear walls with aspect ratios greater than 2-to-1, the boundary elements are confined with spirals or ties with spacing less than $8d_b$. (Commentary: Sec. A.3.2.2.5. Tier 2: Sec. 5.5.3.2.2)

WALL REINFORCING AT OPENINGS: There is added trim reinforcement around all wall openings with a dimension greater than three times the thickness of the wall. (Commentary: Sec. A.3.2.2.6. Tier 2: Sec. 5.5.3.1.5)

WALL THICKNESS: Thicknesses of bearing walls are not less than 1/25 the unsupported height or length, whichever is shorter, nor less than 4 in. (Commentary: Sec. A.3.2.2.7. Tier 2: Sec. 5.5.3.1.2)

Connections UPLIFT AT PILE CAPS: Pile caps shall have top reinforcement, and piles are anchored to the pile caps; the pile cap reinforcement and pile anchorage are able to develop the tensile capacity of the piles. (Commentary: Sec. A.5.3.8. Tier 2: Sec. 5.7.3.5)

Diaphragms (Flexible or Stiff) DIAPHRAGM CONTINUITY: The diaphragms are not composed of split-level floors and do not have expansion joints. (Commentary: Sec. A.4.1.1. Tier 2: Sec. 5.6.1.1)

OPENINGS AT SHEAR WALLS: Diaphragm openings immediately adjacent to the shear walls are less than 15% of the wall length. (Commentary: Sec. A.4.1.4. Tier 2: Sec. 5.6.1.3)

PLAN IRREGULARITIES: There is tensile capacity to develop the strength of the diaphragm at reentrant corners or other locations of plan irregularities. (Commentary: Sec. A.4.1.7. Tier 2: Sec. 5.6.1.4)

DIAPHRAGM REINFORCEMENT AT OPENINGS: There is reinforcing around all diaphragm openings larger than 50% of the building width in either major plan dimension. (Commentary: Sec. A.4.1.8. Tier 2: Sec. 5.6.1.5)

Flexible Diaphragms CROSS TIES: There are continuous cross ties between diaphragm chords. (Commentary: Sec. A.4.1.2. Tier 2: Sec. 5.6.1.2)

STRAIGHT SHEATHING: All straight sheathed diaphragms have aspect ratios less than 1-to-1 in the direction being considered. (Commentary: Sec. A.4.2.1. Tier 2: Sec. 5.6.2)

SPANS: All wood diaphragms with spans greater than 12 ft consist of wood structural panels or diagonal sheathing. (Commentary: Sec. A.4.2.2. Tier 2: Sec. 5.6.2)

DIAGONALLY SHEATHED AND UNBLOCKED DIAPHRAGMS: All diagonally sheathed or unblocked wood structural panel diaphragms have horizontal spans less than 30 ft and aspect ratios less than or equal to 3-to-1. (Commentary: Sec. A.4.2.3. Tier 2: Sec. 5.6.2)

NONCONCRETE FILLED DIAPHRAGMS: Untopped metal deck diaphragms or metal deck diaphragms with fill other than concrete consist of horizontal spans of less than 40 ft and have aspect ratios less than 4-to-1. (Commentary: Sec. A.4.3.1. Tier 2: Sec. 5.6.3)

OTHER DIAPHRAGMS: The diaphragm does not consist of a system other than wood, metal deck, concrete, or horizontal bracing. (Commentary: Sec. A.4.7.1. Tier 2: Sec. 5.6.5)

16.11LS LIFE SAFETY STRUCTURAL CHECKLIST FOR BUILDING TYPES C3: CONCRETE FRAMES WITH INFILL MASONRY SHEAR WALLS AND C3A: CONCRETE FRAMES WITH INFILL MASONRY SHEAR WALLS AND FLEXIBLE DIAPHRAGMS

This Life Safety Structural Checklist shall be completed where required by Table 4-7 and where the building configuration complies with the description of C3 or C3a building type defined in Table 3-1. Tier 1 screening shall include on-site investigation and condition assessment as required by Section 4.2.1.

Each of the evaluation statements in this checklist shall be marked Compliant (C), Noncompliant (NC), Not Applicable (N/A), or Unknown (U) for a Tier 1 screening. Compliant statements identify issues that are acceptable according to the criteria of this standard, whereas noncompliant and unknown statements identify issues that require further investigation. Certain statements may not apply to the buildings being evaluated. For noncompliant and unknown evaluation statements, the design professional may choose to conduct further investigation using the corresponding Tier 2 evaluation procedure; corresponding section numbers are in parentheses after each evaluation statement.

C16.11LS LIFE SAFETY STRUCTURAL CHECKLIST FOR BUILDING TYPES C3: CONCRETE FRAMES WITH INFILL MASONRY SHEAR WALLS AND C3A: CONCRETE FRAMES WITH INFILL MASONRY SHEAR WALLS AND FLEXIBLE DIAPHRAGMS

Building Type C3: Concrete Frames with Infill Masonry Shear Walls This is an older type of building construction that consists of a frame assembly of cast-in-place concrete beams and columns. The floor and roof diaphragms consist of cast-in-place concrete slabs and are stiff relative to the walls. Walls consist of infill panels constructed of solid clay brick, concrete block, or hollow-clay tile masonry. The seismic performance of this type of construction depends on the interaction between the frame and infill panels. The combined behavior is more like a shear wall structure than a frame structure. Solidly infilled masonry panels form diagonal compression struts between the intersections of the frame members. If the walls are offset from the frame and do not fully engage the frame members, the diagonal compression struts do not develop. The strength of the infill panel is limited by the shear capacity of the masonry bed joint or the compression capacity of the strut. The postcracking strength is determined by an analysis of a moment frame that is partially restrained by the cracked infill. The shear strength of the concrete columns, after cracking of the infill, may limit the semiductile behavior of the system.

Building Type C3a: Concrete Frames with Infill Masonry Shear Walls and Flexible Diaphragms These buildings are similar to building type S5 except that diaphragms consist of wood framing; untopped metal deck; or metal deck with lightweight insulating concrete, poured gypsum, or similar nonstructural topping and are flexible relative to the walls.

Low and Moderate Seismicity

Seismic-Force-Resisting System REDUNDANCY: The number of lines of shear walls in each principal direction is greater

than or equal to 2. (Commentary: Sec. A.3.2.1.1. Tier 2: Sec. 5.5.1.1)

SHEAR STRESS CHECK: The shear stress in the reinforced masonry shear walls, calculated using the Quick Check procedure of Section 4.5.3.3, is less than 70 lb/in.^{2}. (Commentary: Sec. A.3.2.4.1. Tier 2: Sec. 5.5.3.1.1)

SHEAR STRESS CHECK: The shear stress in the unreinforced masonry shear walls, calculated using the Quick Check procedure of Section 4.5.3.3, is less than 30 lb/in.^{2} for clay units and 70 lb/in.^{2} for concrete units. Bays with openings greater than 25% of the wall area shall not be included in A_w of Eq. (4-9). (Commentary: Sec. A.3.2.5.1. Tier 2: Sec. 5.5.3.1.1)

INFILL WALL CONNECTIONS: Masonry is in full contact with frame. (Commentary: A.3.2.6.1. Tier 2: Secs. 5.5.3.5.1 and 5.5.3.5.3)

Connections TRANSFER TO SHEAR WALLS: Diaphragms are connected for transfer of loads to the shear walls. (Commentary: Sec. A.5.2.1. Tier 2: Sec. 5.7.2)

CONCRETE COLUMNS: All concrete columns are doweled into the foundation with a minimum of four bars. (Commentary: Sec. A.5.3.2. Tier 2: Sec. 5.7.3.1)

High Seismicity (Complete the Following Items in Addition to the Items for Low and Moderate Seismicity)

Seismic-Force-Resisting System DEFLECTION COMPATIBILITY: Secondary components have the shear capacity to develop the flexural strength of the components. (Commentary: Sec. A.3.1.6.2. Tier 2: Sec. 5.5.2.5.2)

FLAT SLABS: Flat slabs or plates not part of the seismic-force-resisting system have continuous bottom steel through the column joints. (Commentary: Sec. A.3.1.6.3. Tier 2: Sec. 5.5.2.5.3)

PROPORTIONS: The height-to-thickness ratio of the unreinforced infill walls at each story is less than 9. (Commentary: A.3.2.6.2. Tier 2: Sec. 5.5.3.1.2)

CAVITY WALLS: The infill walls are not of cavity construction. (Commentary: Sec. A.3.2.6.3. Tier 2: Sec. 5.5.3.5.2)

INFILL WALLS: The infill walls are continuous to the soffits of the frame beams and to the columns to either side. (Commentary: Sec. A.3.2.6.4. Tier 2: Sec. 5.5.3.5.3)

Connections UPLIFT AT PILE CAPS: Pile caps have top reinforcement, and piles are anchored to the pile caps. (Commentary: Sec. A.5.3.8. Tier 2: Sec. 5.7.3.5)

STIFFNESS OF WALL ANCHORS: Anchors of concrete or masonry walls to wood structural elements are installed taut and are stiff enough to limit the relative movement between the wall and the diaphragm to no greater than 1/8 in. before engagement of the anchors. (Commentary: Sec. A.5.1.4. Tier 2: Sec. 5.7.1.2)

Diaphragms (Flexible or Stiff) DIAPHRAGM CONTINUITY: The diaphragms are not composed of split-level floors and do not have expansion joints. (Commentary: Sec. A.4.1.1. Tier 2: Sec. 5.6.1.1)

OPENINGS AT SHEAR WALLS: Diaphragm openings immediately adjacent to the shear walls are less than 25% of the wall length. (Commentary: Sec. A.4.1.4. Tier 2: Sec. 5.6.1.3)

OPENINGS AT EXTERIOR MASONRY SHEAR WALLS: Diaphragm openings immediately adjacent to exterior masonry shear walls are not greater than 8 ft long. (Commentary: Sec. A.4.1.6. Tier 2: Sec. 5.6.1.3)

Flexible Diaphragms CROSS TIES: There are continuous cross ties between diaphragm chords. (Commentary: Sec. A.4.1.2. Tier 2: Sec. 5.6.1.2)

STRAIGHT SHEATHING: All straight sheathed diaphragms have aspect ratios less than 2-to-1 in the direction being considered. (Commentary: Sec. A.4.2.1. Tier 2: Sec. 5.6.2)

SPANS: All wood diaphragms with spans greater than 24 ft consist of wood structural panels or diagonal sheathing. (Commentary: Sec. A.4.2.2. Tier 2: Sec. 5.6.2)

DIAGONALLY SHEATHED AND UNBLOCKED DIAPHRAGMS: All diagonally sheathed or unblocked wood structural panel diaphragms have horizontal spans less than 40 ft and aspect ratios less than or equal to 4-to-1. (Commentary: Sec. A.4.2.3. Tier 2: Sec. 5.6.2)

OTHER DIAPHRAGMS: The diaphragm does not consist of a system other than wood, metal deck, concrete, or horizontal bracing. (Commentary: Sec. A.4.7.1. Tier 2: Sec. 5.6.5)

16.11IO IMMEDIATE OCCUPANCY STRUCTURAL CHECKLIST FOR BUILDING TYPES C3: CONCRETE FRAMES WITH INFILL MASONRY SHEAR WALLS AND STIFF DIAPHRAGMS AND C3A: CONCRETE FRAMES WITH INFILL MASONRY SHEAR WALLS AND FLEXIBLE DIAPHRAGMS

This Immediate Occupancy Structural Checklist shall be completed where required by Table 4-7 and where the building configuration complies with the description of C3 or C3a building type defined in Table 3-1. Tier 1 screening shall include on-site investigation and condition assessment as required by Section 4.2.1.

Each of the evaluation statements in this checklist shall be marked Compliant (C), Noncompliant (NC), Not Applicable (N/A), or Unknown (U) for a Tier 1 screening. Compliant statements identify issues that are acceptable according to the criteria of this standard, whereas noncompliant and unknown statements identify issues that require further investigation. Certain statements may not apply to the buildings being evaluated. For noncompliant and unknown evaluation statements, the design professional may choose to conduct further investigation using the corresponding Tier 2 evaluation procedure; corresponding section numbers are in parentheses after each evaluation statement.

C16.11IO IMMEDIATE OCCUPANCY STRUCTURAL CHECKLIST FOR BUILDING TYPES C3: CONCRETE FRAMES WITH INFILL MASONRY SHEAR WALLS AND C3A: CONCRETE FRAMES WITH INFILL MASONRY SHEAR WALLS AND FLEXIBLE DIAPHRAGMS

Building Type C3: Concrete Frames with Infill Masonry Shear Walls This is an older type of building construction that consists of a frame assembly of cast-in-place concrete beams and columns. The floor and roof diaphragms consist of cast-in-place concrete slabs and are stiff relative to the walls. Walls consist of infill panels constructed of solid clay brick, concrete block, or hollow-clay tile masonry. The seismic performance of this type of construction depends on the interaction between the frame and infill panels. The combined behavior is more like a shear wall structure than a frame structure. Solidly infilled masonry panels form diagonal compression struts between the intersections of the frame members. If the walls are offset from the frame and do not fully engage the frame members, the diagonal

compression struts do not develop. The strength of the infill panel is limited by the shear capacity of the masonry bed joint or the compression capacity of the strut. The postcracking strength is determined by an analysis of a moment frame that is partially restrained by the cracked infill. The shear strength of the concrete columns, after cracking of the infill, may limit the semiductile behavior of the system.

Building Type C3a: Concrete Frames with Infill Masonry Shear Walls and Flexible Diaphragms These buildings are similar to building type S5 except that diaphragms consist of wood framing; untopped metal deck; or metal deck with lightweight insulating concrete, poured gypsum, or similar nonstructural topping and are flexible relative to the walls.

Very Low Seismicity

Seismic-Force-Resisting System REDUNDANCY: The number of lines of shear walls in each principal direction is greater than or equal to 2. (Commentary: Sec. A.3.2.1.1. Tier 2: Sec. 5.5.1.1)

SHEAR STRESS CHECK: The shear stress in the reinforced masonry shear walls, calculated using the Quick Check procedure of Section 4.5.3.3, is less than 70 lb/in.^{2}. (Commentary: Sec. A.3.2.4.1. Tier 2: Sec. 5.5.3.1.1)

SHEAR STRESS CHECK: The shear stress in the unreinforced masonry shear walls, calculated using the Quick Check procedure of Section 4.5.3.3, is less than 30 lb/in.^{2} for clay units and 70 lb/in.^{2} for concrete units. Bays with openings greater than 25% of the wall area shall not be included in A_w of Eq. (4-9). (Commentary: Sec. A.3.2.5.1. Tier 2: Sec. 5.5.3.1.1)

INFILL WALL CONNECTIONS: Masonry is in full contact with frame. (Commentary: Sec. A.3.2.6.1. Tier 2: Secs. 5.5.3.5.1 and 5.5.3.5.3)

Connections TRANSFER TO SHEAR WALLS: Diaphragms are connected for transfer of loads to the shear walls, and the connections are able to develop the lesser of the shear strength of the walls or diaphragms. (Commentary: Sec. A.5.2.1. Tier 2: Sec. 5.7.2)

CONCRETE COLUMNS: All concrete columns are doweled into the foundation with a minimum of four bars, and the dowels are able to develop the tensile capacity of reinforcement in columns of the seismic-force-resisting system. (Commentary: Sec. A.5.3.2. Tier 2: Sec. 5.7.3.1)

Low and Moderate Seismicity (Complete the Following in Addition to the Items for Very Low Seismicity)

Seismic-Force-Resisting System DEFLECTION COMPATIBILITY: Secondary components shall have the shear capacity to develop the flexural strength of the components and are Compliant with the following items: COLUMN-BAR SPLICES, BEAM-BAR SPLICES, COLUMN-TIE SPACING, STIRRUP SPACING, and STIRRUP AND TIE HOOKS. (Commentary: Sec. A.3.1.6.2. Tier 2: Sec. 5.5.2.5.2)

FLAT SLABS: Flat slabs or plates not part of the seismic-force-resisting system have continuous bottom steel through the column joints. (Commentary: Sec. A.3.1.6.3. Tier 2: Sec. 5.5.2.5.3)

REINFORCING AT WALL OPENINGS: All wall openings that interrupt rebar have trim reinforcing on all sides. (Commentary: Sec. A.3.2.4.3. Tier 2: Sec. 5.5.3.1.5)

PROPORTIONS: The height-to-thickness ratio of the unreinforced infill walls at each story is less than 13. (Commentary: Sec. A.3.2.6.2. Tier 2: Sec. 5.5.3.1.2)

CAVITY WALLS: The infill walls are not of cavity construction. (Commentary: Sec. A.3.2.6.3. Tier 2: Sec. 5.5.3.5.2)

INFILL WALLS: The infill walls are continuous to the soffits of the frame beams and to the columns to either side. (Commentary: Sec. A.3.2.6.4. Tier 2: Sec. 5.5.3.5.3)

Connections UPLIFT AT PILE CAPS: Pile caps shall have top reinforcement, and piles are anchored to the pile caps; the pile cap reinforcement and pile anchorage are able to develop the tensile capacity of the piles. (Commentary: Sec. A.5.3.8. Tier 2: Sec. 5.7.3.5)

STIFFNESS OF WALL ANCHORS: Anchors of concrete or masonry walls to wood structural elements are installed taut and are stiff enough to limit the relative movement between the wall and the diaphragm to no greater than 1/8 in. before engagement of the anchors. (Commentary: Sec. A.5.1.4. Tier 2: Sec. 5.7.1.2)

Diaphragms (Flexible or Stiff) DIAPHRAGM CONTINUITY: The diaphragms are not composed of split-level floors and shall not have expansion joints. (Commentary: Sec. A.4.1.1. Tier 2: Sec. 5.6.1.1)

OPENINGS AT SHEAR WALLS: Diaphragm openings immediately adjacent to the shear walls are less than 15% of the wall length. (Commentary: Sec. A.4.1.4. Tier 2: Sec. 5.6.1.3)

OPENINGS AT EXTERIOR MASONRY SHEAR WALLS: Diaphragm openings immediately adjacent to exterior masonry shear walls are not greater than 4 ft long. (Commentary: A.4.1.6. Tier 2: Sec. 5.6.1.3)

PLAN IRREGULARITIES: There is tensile capacity to develop the strength of the diaphragm at reentrant corners or other locations of plan irregularities. (Commentary: Sec. A.4.1.7. Tier 2: Sec. 5.6.1.4)

DIAPHRAGM REINFORCEMENT AT OPENINGS: There is reinforcing around all diaphragm openings larger than 50% of the building width in either major plan dimension. (Commentary: Sec. A.4.1.8. Tier 2: Sec. 5.6.1.5)

Flexible Diaphragms CROSS TIES: There are continuous cross ties between diaphragm chords. (Commentary: Sec. A.4.1.2. Tier 2: Sec. 5.6.1.2)

STRAIGHT SHEATHING: All straight sheathed diaphragms have aspect ratios less than 1-to-1 in the direction being considered. (Commentary: Sec. A.4.2.1. Tier 2: Sec. 5.6.2)

SPANS: All wood diaphragms with spans greater than 12 ft consist of wood structural panels or diagonal sheathing. (Commentary: Sec. A.4.2.2. Tier 2: Sec. 5.6.2)

DIAGONALLY SHEATHED AND UNBLOCKED DIAPHRAGMS: All diagonally sheathed or unblocked wood structural panel diaphragms have horizontal spans less than 30 ft and aspect ratios less than or equal to 3-to-1. (Commentary: Sec. A.4.2.3. Tier 2: Sec. 5.6.2)

NONCONCRETE FILLED DIAPHRAGMS: Untopped metal deck diaphragms or metal deck diaphragms with fill other than concrete consist of horizontal spans of less than 40 ft and shall have aspect ratios less than 4-to-1. (Commentary: Sec. A.4.3.1. Tier 2: Sec. 5.6.3)

OTHER DIAPHRAGMS: The diaphragm does not consist of a system other than wood, metal deck, concrete, or horizontal bracing. (Commentary: Sec. A.4.7.1. Tier 2: Sec. 5.6.5)

High Seismicity (Complete the Following in Addition to the Items for Very Low, Low, and Moderate Seismicity)

Seismic-Force-Resisting System PROPORTIONS: The height-to-thickness ratio of the unreinforced infill walls at each story is less than 8. (Commentary: Sec. A.3.2.6.2. Tier 2: Sec. 5.5.3.1.2)

16.12LS LIFE SAFETY STRUCTURAL CHECKLIST FOR BUILDING TYPES PC1: PRECAST OR TILT-UP CONCRETE SHEAR WALLS WITH FLEXIBLE DIAPHRAGMS AND PC1A: PRECAST OR TILT-UP CONCRETE SHEAR WALLS WITH STIFF DIAPHRAGMS

This Life Safety Structural Checklist shall be completed where required by Table 4-7 and where the building configuration complies with the description of PC1 or PC1a building type defined in Table 3-1. Tier 1 screening shall include on-site investigation and condition assessment as required by Section 4.2.1.

Each of the evaluation statements in this checklist shall be marked Compliant (C), Noncompliant (NC), Not Applicable (N/A), or Unknown (U) for a Tier 1 screening. Compliant statements identify issues that are acceptable according to the criteria of this standard, whereas noncompliant and unknown statements identify issues that require further investigation. Certain statements may not apply to the buildings being evaluated. For noncompliant and unknown evaluation statements, the design professional may choose to conduct further investigation using the corresponding Tier 2 evaluation procedure; corresponding section numbers are in parentheses after each evaluation statement.

C16.12LS LIFE SAFETY STRUCTURAL CHECKLIST FOR BUILDING TYPES PC1: PRECAST OR TILT-UP CONCRETE SHEAR WALLS WITH FLEXIBLE DIAPHRAGMS AND PC1A: PRECAST OR TILT-UP CONCRETE SHEAR WALLS WITH STIFF DIAPHRAGMS

Building Type PC1: Precast or Tilt-Up Concrete Shear Walls with Flexible Diaphragms These buildings have precast concrete perimeter wall panels that are cast on site and tilted into place. Floor and roof framing consists of wood subpurlins, purlins, glulam beams, steel beams, steel trusses, or open web or plywood joists. Framing is supported on interior steel or wood columns and perimeter concrete bearing walls. Seismic forces are typically resisted by the precast concrete perimeter wall panels. Buildings with large diaphragm spans or irregular plan shapes sometimes rely on interior tilt-up walls or steel braced frames. Wall panels may be solid or have large window and door openings that cause the panels to behave more as frames than as shear walls. The floor and roof diaphragms consist of wood sheathing; untopped metal deck; or metal deck with lightweight insulating concrete, poured gypsum, or similar nonstructural topping and are flexible relative to the walls. In older construction, wood framing is attached to the walls with wood ledgers. Foundations consist of concrete spread footings, strip footings, or deep pile foundations.

Building Type PC1a: Precast or Tilt-Up Concrete Shear Walls with Stiff Diaphragms These buildings are similar to building type PC1 except that the floor and roof diaphragms consist of precast elements, cast-in-place concrete, or metal deck with concrete fill, and are stiff relative to the walls.

A typical two-story tilt-up building is a combination of PC1 and PC1a because it has a flexible roof diaphragm and a stiff upper-floor diaphragm.

Refer to Section A.3.2 for additional commentary related to shear walls in general and Section A.3.2.3 for commentary related to precast shear walls.

Low Seismicity

Connections WALL ANCHORAGE: Exterior concrete or masonry walls that are dependent on the diaphragm for lateral support are anchored for out-of-plane forces at each diaphragm level with steel anchors, reinforcing dowels, or straps that are developed into the diaphragm. Connections shall have adequate strength to resist the connection force calculated in the Quick Check procedure of Section 4.5.3.7. (Commentary: Sec. A.5.1.1. Tier 2: Sec. 5.7.1.1)

Moderate Seismicity (Complete the Following Items in Addition to the Items for Low Seismicity)

Seismic-Force-Resisting System REDUNDANCY: The number of lines of shear walls in each principal direction is greater than or equal to 2. (Commentary: Sec. A.3.2.1.1. Tier 2: Sec. 5.5.1.1)

WALL SHEAR STRESS CHECK: The shear stress in the precast panels, calculated using the Quick Check procedure of Section 4.5.3.3, is less than the greater of 100 lb/in.^{2} or $2\sqrt{f'_c}$. (Commentary: Sec. A.3.2.3.1. Tier 2: Sec. 5.5.3.1.1)

REINFORCING STEEL: The ratio of reinforcing steel area to gross concrete area is not less than 0.0012 in the vertical direction and 0.0020 in the horizontal direction. (Commentary: Sec. A.3.2.3.2. Tier 2: Sec. 5.5.3.1.3)

WALL THICKNESS: Thicknesses of bearing walls shall not be less than 1/40 the unsupported height or length, whichever is shorter, nor less than 4 in. (Commentary: Sec. A.3.2.3.5. Tier 2: Sec. 5.5.3.1.2)

Diaphragms TOPPING SLAB: Precast concrete diaphragm elements are interconnected by a continuous reinforced concrete topping slab with a minimum thickness of 2 in. (Commentary: Sec. A.4.5.1. Tier 2: Sec. 5.6.4)

Connections WOOD LEDGERS: The connection between the wall panels and the diaphragm does not induce cross-grain bending or tension in the wood ledgers. (Commentary: Sec. A.5.1.2. Tier 2: Sec. 5.7.1.3)

TRANSFER TO SHEAR WALLS: Diaphragms are connected for transfer of seismic forces to the shear walls. (Commentary: Sec. A.5.2.1. Tier 2: Sec. 5.7.2)

TOPPING SLAB TO WALLS OR FRAMES: Reinforced concrete topping slabs that interconnect the precast concrete diaphragm elements are doweled for transfer of forces into the shear wall or frame elements. (Commentary: Sec. A.5.2.3. Tier 2: Sec. 5.7.2)

GIRDER–COLUMN CONNECTION: There is a positive connection using plates, connection hardware, or straps between the girder and the column support. (Commentary: Sec. A.5.4.1. Tier 2: Sec. 5.7.4.1)

High Seismicity (Complete the Following Items in Addition to the Items for Low and Moderate Seismicity)

Seismic-Force-Resisting System DEFLECTION COMPATIBILITY FOR RIGID DIAPHRAGMS: Secondary components have the shear capacity to develop the flexural strength of the components. (Commentary: Sec. A.3.1.6.2. Tier 2: Sec. 5.5.2.5.2)

WALL OPENINGS: The total width of openings along any perimeter wall line constitutes less than 75% of the length of any perimeter wall when the wall piers have aspect ratios of less than 2-to-1. (Commentary: Sec. A.3.2.3.3. Tier 2: Sec. 5.5.3.3.1)

Diaphragms CROSS TIES IN FLEXIBLE DIAPHRAGMS: There are continuous cross ties between diaphragm chords. (Commentary: Sec. A.4.1.2. Tier 2: Sec. 5.6.1.2)

STRAIGHT SHEATHING: All straight sheathed diaphragms have aspect ratios less than 2-to-1 in the direction being considered. (Commentary: Sec. A.4.2.1. Tier 2: Sec. 5.6.2)

SPANS: All wood diaphragms with spans greater than 24 ft consist of wood structural panels or diagonal sheathing. (Commentary: Sec. A.4.2.2. Tier 2: Sec. 5.6.2)

DIAGONALLY SHEATHED AND UNBLOCKED DIAPHRAGMS: All diagonally sheathed or unblocked wood structural panel diaphragms have horizontal spans less than 40 ft and aspect ratios less than or equal to 4-to-1. (Commentary: Sec. A.4.2.3. Tier 2: Sec. 5.6.2)

OTHER DIAPHRAGMS: The diaphragm does not consist of a system other than wood, metal deck, concrete, or horizontal bracing. (Commentary: Sec. A.4.7.1. Tier 2: Sec. 5.6.5)

Connections MINIMUM NUMBER OF WALL ANCHORS PER PANEL: There are at least two anchors from each precast wall panel into the diaphragm elements. (Commentary: Sec. A.5.1.3. Tier 2: Sec. 5.7.1.4)

PRECAST WALL PANELS: Precast wall panels are connected to the foundation. (Commentary: Sec. A.5.3.6. Tier 2: Sec. 5.7.3.4)

UPLIFT AT PILE CAPS: Pile caps have top reinforcement, and piles are anchored to the pile caps. (Commentary: Sec. A.5.3.8. Tier 2: Sec. 5.7.3.5)

GIRDERS: Girders supported by walls or pilasters have at least two ties securing the anchor bolts unless provided with independent stiff wall anchors with adequate strength to resist the connection force calculated in the Quick Check procedure of Section 4.5.3.7. (Commentary: Sec. A.5.4.2. Tier 2: Sec. 5.7.4.2)

16.12IO IMMEDIATE OCCUPANCY STRUCTURAL CHECKLIST FOR BUILDING TYPES PC1: PRECAST OR TILT-UP CONCRETE SHEAR WALLS WITH FLEXIBLE DIAPHRAGMS AND PC1A: PRECAST OR TILT-UP CONCRETE SHEAR WALLS WITH STIFF DIAPHRAGMS

This Immediate Occupancy Structural Checklist shall be completed where required by Table 4-7 and where the building configuration complies with the description of PC1 or PC1a building type defined in Table 3-1. Tier 1 screening shall include on-site investigation and condition assessment as required by Section 4.2.1.

Each of the evaluation statements in this checklist shall be marked Compliant (C), Noncompliant (NC), Not Applicable (N/A), or Unknown (U) for a Tier 1 screening. Compliant statements identify issues that are acceptable according to the criteria of this standard, whereas noncompliant and unknown statements identify issues that require further investigation. Certain statements may not apply to the buildings being evaluated. For noncompliant and unknown evaluation statements, the design professional may choose to conduct further investigation using the corresponding Tier 2 evaluation procedure; corresponding section numbers are in parentheses after each evaluation statement.

C16.12IO IMMEDIATE OCCUPANCY STRUCTURAL CHECKLIST FOR BUILDING TYPES PC1: PRECAST OR TILT-UP CONCRETE SHEAR WALLS WITH FLEXIBLE DIAPHRAGMS AND PC1A: PRECAST OR TILT-UP CONCRETE SHEAR WALLS WITH STIFF DIAPHRAGMS

Building Type PC1: Precast or Tilt-Up Concrete Shear Walls with Flexible Diaphragms These buildings have precast concrete perimeter wall panels that are cast on site and tilted into place. Floor and roof framing consists of wood joists, glulam beams, steel beams, or open web joists. Framing is supported on interior steel or concrete columns and perimeter concrete bearing walls. Seismic forces are resisted by the precast concrete perimeter wall panels. Wall panels may be solid or have large window and door openings that cause the panels to behave more as frames than as shear walls. The floor and roof diaphragms consist of wood sheathing; untopped metal deck; or metal deck with lightweight insulating concrete, poured gypsum, or similar nonstructural topping and are flexible relative to the walls. In older construction, wood framing is attached to the walls with wood ledgers. Foundations consist of concrete spread footings or deep pile foundations.

Building Type PC1a: Precast or Tilt-Up Concrete Shear Walls with Stiff Diaphragms These buildings are similar to building type PC1 except that the floor and roof diaphragms consist of precast elements.

A typical two-story tilt-up building is a combination of building types PC1 and PC1a because it has a flexible roof diaphragm and a stiff upper floor diaphragm.

Refer to Section A.3.2 for additional commentary related to shear walls in general and Section A.3.2.3 for commentary related to precast shear walls.

Very Low Seismicity

Foundation System DEEP FOUNDATIONS: Piles and piers are capable of transferring the lateral forces between the structure and the soil. (Commentary: Sec. A.6.2.3.)

SLOPING SITES: The difference in foundation embedment depth from one side of the building to another shall not exceed one story high. (Commentary: Sec. A.6.2.4)

Connections WALL ANCHORAGE: Exterior concrete or masonry walls that are dependent on the diaphragm for lateral support are anchored for out-of-plane forces at each diaphragm level with steel anchors, reinforcing dowels, or straps that are developed into the diaphragm. Connections shall have adequate strength to resist the connection force calculated in the Quick Check procedure of Section 4.5.3.7. (Commentary: Sec. A.5.1.1. Tier 2: Sec. 5.7.1.1)

Seismic-Force-Resisting System REDUNDANCY: The number of lines of shear walls in each principal direction is greater than or equal to 2. (Commentary: Sec. A.3.2.1.1. Tier 2: Sec. 5.5.1.1)

WALL SHEAR STRESS CHECK: The shear stress in the precast panels, calculated using the Quick Check procedure of Section 4.5.3.3, is less than the greater of 100 lb/in.^{2} or $2\sqrt{f'_c}$. (Commentary: Sec. A.3.2.3.1. Tier 2: Sec. 5.5.3.1.1)

REINFORCING STEEL: The ratio of reinforcing steel area to gross concrete area is not less than 0.0012 in the vertical direction and 0.0020 in the horizontal direction. The spacing of reinforcing steel is equal to or less than 18 in. (Commentary: Sec. A.3.2.3.2. Tier 2: Sec. 5.5.3.1.3)

Diaphragms TOPPING SLAB: Precast concrete diaphragm elements are interconnected by a continuous reinforced concrete topping slab with a minimum thickness of 2 in. (Commentary: Sec. A.4.5.1. Tier 2: Sec. 5.6.4)

Connections WOOD LEDGERS: The connection between the wall panels and the diaphragm does not induce cross-grain bending or tension in the wood ledgers. (Commentary: Sec. A.5.1.2. Tier 2: Sec. 5.7.1.4)

TRANSFER TO SHEAR WALLS: Diaphragms are connected for transfer of seismic forces to the shear walls, and the connec-

tions are able to develop the lesser of the shear strength of the walls or diaphragms. (Commentary: Sec. A.5.2.1. Tier 2: Sec. 5.7.2)

TOPPING SLAB TO WALLS OR FRAMES: Reinforced concrete topping slabs that interconnect the precast concrete diaphragm elements are doweled for transfer of forces into the shear wall or frame elements, and the dowels are able to develop the least of the shear strength of the walls, frames, or slabs. (Commentary: Sec. A.5.2.3. Tier 2: Sec. 5.7.2)

GIRDER–COLUMN CONNECTION: There is a positive connection using plates, connection hardware, or straps between the girder and the column support. (Commentary: Sec. A.5.4.1. Tier 2: Sec. 5.7.4.1)

Low, Moderate, and High Seismicity (Complete the Following Items in Addition to the Items for Very Low Seismicity)

Seismic-Force-Resisting System DEFLECTION COMPATIBILITY FOR RIGID DIAPHRAGMS: Secondary components shall have the shear capacity to develop the flexural strength of the components. (Commentary: Sec. A.3.1.6.2. Tier 2: Sec. 5.5.2.5.2)

WALL OPENINGS: The total width of openings along any perimeter wall line constitutes less than 50% of the length of any perimeter wall when the wall piers have aspect ratios of less than 2-to-1. (Commentary: Sec. A.3.2.3.3. Tier 2: Sec. 5.5.3.3.1)

PANEL-TO-PANEL CONNECTIONS: Adjacent wall panels are interconnected to transfer overturning forces between panels by methods other than welded steel inserts. (Commentary: Sec. A.3.2.3.4. Tier 2: Sec. 5.5.3.3.3)

WALL THICKNESS: Thicknesses of bearing walls shall not be less than 1/25 the unsupported height or length, whichever is shorter, nor less than 4 in. (Commentary: Sec. A.3.2.3.5. Tier 2: Sec. 5.5.3.1.2)

Diaphragms CROSS TIES FOR FLEXIBLE DIAPHRAGMS: There are continuous cross ties between diaphragm chords. (Commentary: Sec. A.4.1.2. Tier 2: Sec. 5.6.1.2)

PLAN IRREGULARITIES: There is tensile capacity to develop the strength of the diaphragm at reentrant corners or other locations of plan irregularities. (Commentary: Sec. A.4.1.7. Tier 2: Sec. 5.6.1.4)

DIAPHRAGM REINFORCEMENT AT OPENINGS: There is reinforcing around all diaphragm openings larger than 50% of the building width in either major plan dimension. (Commentary: Sec. A.4.1.8. Tier 2: Sec. 5.6.1.5)

STRAIGHT SHEATHING: All straight sheathed diaphragms have aspect ratios less than 1-to-1 in the direction being considered. (Commentary: Sec. A.4.2.1. Tier 2: Sec. 5.6.2)

SPANS: All wood diaphragms with spans greater than 12 ft consist of wood structural panels or diagonal sheathing. (Commentary: Sec. A.4.2.2. Tier 2: Sec. 5.6.2)

DIAGONALLY SHEATHED AND UNBLOCKED DIAPHRAGMS: All diagonally sheathed or unblocked wood structural panel diaphragms have horizontal spans less than 30 ft and aspect ratios less than or equal to 3-to-1. (Commentary: Sec. A.4.2.3. Tier 2: Sec. 5.6.2)

OTHER DIAPHRAGMS: The diaphragm does not consist of a system other than wood, metal deck, concrete, or horizontal bracing. (Commentary: Sec. A.4.7.1. Tier 2: Sec. 5.6.5)

Connections MINIMUM NUMBER OF WALL ANCHORS PER PANEL: There are at least two anchors from each precast wall panel into the diaphragm elements. (Commentary: Sec. A.5.1.3. Tier 2: Sec. 5.7.1.4)

PRECAST WALL PANELS: Precast wall panels are connected to the foundation, and the connections are able to develop the strength of the walls. (Commentary: Sec. A.5.3.6. Tier 2: Sec. 5.7.3.4)

UPLIFT AT PILE CAPS: Pile caps shall have top reinforcement, and piles are anchored to the pile caps; the pile cap reinforcement and pile anchorage are able to develop the tensile capacity of the piles. (Commentary: Sec. A.5.3.8. Tier 2: Sec. 5.7.3.5)

GIRDERS: Girders supported by walls or pilasters have at least two ties securing the anchor bolts unless provided with independent stiff wall anchors with adequate strength to resist the connection force calculated in the Quick Check procedure of Section 4.5.3.7. (Commentary: Sec. A.5.4.2. Tier 2: Sec. 5.7.4.2)

16.13LS LIFE SAFETY STRUCTURAL CHECKLIST FOR BUILDING TYPE PC2: PRECAST CONCRETE FRAMES WITH SHEAR WALLS

This Life Safety Structural Checklist shall be completed where required by Table 4-7 and where the building configuration complies with the description of PC2 building type defined in Table 3-1. Tier 1 screening shall include on-site investigation and condition assessment as required by Section 4.2.1.

Each of the evaluation statements in this checklist shall be marked Compliant (C), Noncompliant (NC), Not Applicable (N/A), or Unknown (U) for a Tier 1 screening. Compliant statements identify issues that are acceptable according to the criteria of this standard, whereas unknown or noncompliant statements identify issues that require further investigation. Certain statements may not apply to the buildings being evaluated. For unknown or noncompliant evaluation statements, the design professional may choose to conduct further investigation using the corresponding Tier 2 evaluation procedure; corresponding section numbers are in parentheses after each evaluation statement.

C16.13LS LIFE SAFETY STRUCTURAL CHECKLIST FOR BUILDING TYPE PC2: PRECAST CONCRETE FRAMES WITH SHEAR WALLS

These buildings consist of a frame assembly of precast concrete girders and columns with the presence of shear walls. Floor and roof framing consists of precast concrete planks, Tees, or double-Tees supported on precast concrete girders and columns. Seismic forces are resisted by precast or cast-in-place concrete shear walls. Diaphragms consist of precast elements interconnected with welded inserts, cast-in-place closure strips, or reinforced concrete topping slabs.

Low and Moderate Seismicity

Seismic-Force-Resisting System COMPLETE FRAMES: Steel or concrete frames classified as secondary components form a complete vertical-load-carrying system. (Commentary: Sec. A.3.3.1.6.1. Tier 2: Sec. 5.5.2.5.1)

REDUNDANCY: The number of lines of shear walls in each principal direction is greater than or equal to 2. (Commentary: Sec. A.3.2.1.1. Tier 2: Sec. 5.5.1.1)

SHEAR STRESS CHECK: The shear stress in the concrete shear walls, calculated using the Quick Check procedure of Section 4.5.3.3, is less than the greater of 100 lb/in.^{2} or $2\sqrt{f_c'}$. (Commentary: Sec. A.3.2.2.1. Tier 2: Sec. 5.5.3.1.1)

REINFORCING STEEL: The ratio of reinforcing steel area to gross concrete area is not less than 0.0012 in the vertical direction and 0.0020 in the horizontal direction. (Commentary: Sec. A.3.2.2.2. Tier 2: Sec. 5.5.3.1.3)

Diaphragms TOPPING SLAB: Precast concrete diaphragm elements are interconnected by a continuous reinforced concrete topping slab with a minimum thickness of 2 in. (Commentary: Sec. A.4.5.1. Tier 2: Sec. 5.6.4)

Connections TRANSFER TO SHEAR WALLS: Diaphragms are connected for transfer of seismic forces to the shear walls. (Commentary: Sec. A.5.2.1. Tier 2: Sec. 5.7.2)

TOPPING SLAB TO WALLS OR FRAMES: Reinforced concrete topping slabs that interconnect the precast concrete diaphragm elements are doweled for transfer of forces into the shear wall or frame elements. (Commentary: Sec. A.5.2.3. Tier 2: Sec. 5.7.2)

FOUNDATION DOWELS: Wall reinforcement is doweled into the foundation. (Commentary: Sec. A.5.3.5. Tier 2: Sec. 5.7.3.4)

GIRDER–COLUMN CONNECTION: There is a positive connection using plates, connection hardware, or straps between the girder and the column support. (Commentary: Sec. A.5.4.1. Tier 2: Sec. 5.7.4.1)

High Seismicity (Complete the Following Items in Addition to Those for Low and Moderate Seismicity)

Seismic-Force-Resisting System PRECAST FRAMES: For buildings with concrete shear walls, precast concrete frame elements are not considered as primary components for resisting seismic forces. (Commentary: Sec. A.3.1.5.2. Tier 2: Secs. 5.5.2.4, 5.5.2.5.1, and 5.5.2.5.2)

PRECAST CONNECTIONS: For buildings with concrete shear walls, the connection between precast frame elements, such as chords, ties, and collectors in the seismic-force-resisting system, develops the capacity of the connected members. (Commentary: Sec. A.3.1.5.3. Tier 2: Sec. 5.6.1.1)

DEFLECTION COMPATIBILITY: Secondary components have the shear capacity to develop the flexural strength of the components. (Commentary: Sec. A.3.1.6.2. Tier 2: Sec. 5.5.2.5.2)

COUPLING BEAMS: The stirrups in coupling beams over means of egress are spaced at or less than $d/2$ and are anchored into the confined core of the beam with hooks of 135 degrees or more. The ends of both walls to which the coupling beam is attached are supported at each end to resist vertical loads caused by overturning. (Commentary: Sec. A.3.2.2.3. Tier 2: Sec. 5.5.3.2.1)

Diaphragms OPENINGS AT SHEAR WALLS: Diaphragm openings immediately adjacent to the shear walls are less than 25% of the wall length. (Commentary: Sec. A.4.1.4. Tier 2: Sec. 5.5.3.3.1)

Connections UPLIFT AT PILE CAPS: Pile caps have top reinforcement, and piles are anchored to the pile caps. (Commentary: Sec. A.5.3.8. Tier 2: Sec. 5.7.3.5)

CORBEL BEARING: If the frame girders bear on column corbels, the length of bearing is greater than 3 in. (Commentary: Sec. A.5.4.3. Tier 2: Sec. 5.7.4.3)

CORBEL CONNECTIONS: The frame girders are not connected to corbels with welded elements. (Commentary: Sec. A.5.4.4. Tier 2: Sec. 5.7.4.3)

16.13IO IMMEDIATE OCCUPANCY STRUCTURAL CHECKLIST FOR BUILDING TYPE PC2: PRECAST CONCRETE FRAMES WITH SHEAR WALLS

This Immediate Occupancy Structural Checklist shall be completed where required by Table 4-7 and where the building configuration complies with the description of PC2 building type defined in Table 3-1. Tier 1 screening shall include on-site investigation and condition assessment as required by Section 4.2.1.

Each of the evaluation statements in this checklist shall be marked Compliant (C), Noncompliant (NC), Not Applicable (N/A), or Unknown (U) for a Tier 1 screening. Compliant statements identify issues that are acceptable according to the criteria of this standard, whereas unknown or noncompliant statements identify issues that require further investigation. Certain statements may not apply to the buildings being evaluated. For unknown or noncompliant evaluation statements, the design professional may choose to conduct further investigation using the corresponding Tier 2 evaluation procedure; corresponding section numbers are in parentheses after each evaluation statement.

C16.13IO IMMEDIATE OCCUPANCY STRUCTURAL CHECKLIST FOR BUILDING TYPE PC2: PRECAST CONCRETE FRAMES WITH SHEAR WALLS

These buildings consist of a frame assembly of precast concrete girders and columns with the presence of shear walls. Floor and roof framing consists of precast concrete planks, Tees, or double-Tees supported on precast concrete girders and columns. Seismic forces are resisted by precast or cast-in-place concrete shear walls. Diaphragms consist of precast elements interconnected with welded inserts, cast-in-place closure strips, or reinforced concrete topping slabs.

Very Low Seismicity

Seismic-Force-Resisting System COMPLETE FRAMES: Steel or concrete frames classified as secondary components form a complete vertical-load-carrying system. (Commentary: Sec. A.3.3.1.6.1. Tier 2: Sec. 5.5.2.5.1)

REDUNDANCY: The number of lines of shear walls in each principal direction is greater than or equal to 2. (Commentary: Sec. A.3.2.1.1. Tier 2: Sec. 5.5.1.1)

SHEAR STRESS CHECK: The shear stress in the concrete shear walls, calculated using the Quick Check procedure of Section 4.5.3.3, is less than the greater of 100 lb/in.^{2} or $2\sqrt{f_c'}$. (Commentary: Sec. A.3.2.2.1. Tier 2: Sec. 5.5.3.1.1)

REINFORCING STEEL: The ratio of reinforcing steel area to gross concrete area is not less than 0.0012 in the vertical direction and 0.0020 in the horizontal direction. The spacing of reinforcing steel is equal to or less than 18 in. (Commentary: Sec. A.3.2.2.2. Tier 2: Sec. 5.5.3.1.3)

Diaphragms TOPPING SLAB: Precast concrete diaphragm elements are interconnected by a continuous reinforced concrete topping slab with a minimum thickness of 2 in. (Commentary: Sec. A.4.5.1. Tier 2: Sec. 5.6.4)

Connections TRANSFER TO SHEAR WALLS: Diaphragms are connected for transfer of seismic forces to the shear walls, and the connections are able to develop the lesser of the shear strength of the walls or diaphragms. (Commentary: Sec. A.5.2.1. Tier 2: Sec. 5.7.2)

TOPPING SLAB TO WALLS OR FRAMES: Reinforced concrete topping slabs that interconnect the precast concrete diaphragm elements is doweled for transfer of forces into the shear wall or frame elements, and the dowels are able to develop the least of the shear strength of the walls, frames, or slabs. (Commentary: Sec. A.5.2.3. Tier 2: Sec. 5.7.2)

FOUNDATION DOWELS: Wall reinforcement is doweled into the foundation, and the dowels are able to develop the lesser of the strength of the walls or the uplift capacity of the foundation. (Commentary: Sec. A.5.3.5. Tier 2: Sec. 5.7.3.4)

GIRDER–COLUMN CONNECTION: There is a positive connection using plates, connection hardware, or straps between the girder and the column support. (Commentary: Sec. A.5.4.1. Tier 2: Sec. 5.7.4.1)

Low, Moderate, and High Seismicity (Complete the Following Items in Addition to Those for Very Low Seismicity)

Seismic-Force-Resisting System PRECAST FRAMES: For buildings with concrete shear walls, precast concrete frame elements are not considered as primary components for resisting seismic forces. (Commentary: Sec. A.3.1.5.2. Tier 2: Secs. 5.5.2.4, 5.5.2.5.1, and 5.5.2.5.2)

PRECAST CONNECTIONS: For buildings with concrete shear walls, the connection between precast frame elements, such as chords, ties, and collectors in the seismic-force-resisting system, develops the capacity of the connected members. (Commentary: Sec. A.3.1.5.3. Tier 2: Sec. 5.6.1.1)

DEFLECTION COMPATIBILITY: Secondary components shall have the shear capacity to develop the flexural strength of the components. (Commentary: Sec. A.3.1.6.2. Tier 2: Sec. 5.5.2.5.2)

COUPLING BEAMS: The stirrups in coupling beams over means of egress are spaced at or less than $d/2$ and are anchored into the confined core of the beam with hooks of 135 degrees or more. All coupling beams shall comply with the requirements above and shall have the capacity in shear to develop the uplift capacity of the adjacent wall. (Commentary: Sec. A.3.2.2.3. Tier 2: Sec. 5.5.3.2.1)

OVERTURNING: All shear walls have aspect ratios less than 4-to-1. Wall piers need not be considered. (Commentary: Sec. A.3.2.2.4. Tier 2: Sec. 5.5.3.1.4)

CONFINEMENT REINFORCING: For shear walls with aspect ratios greater than 2-to-1, the boundary elements are confined with spirals or ties with spacing less than $8d_b$. (Commentary: Sec. A.3.2.2.5. Tier 2: Sec. 5.5.3.2.2)

WALL REINFORCING AT OPENINGS: There is added trim reinforcement around all wall openings with a dimension greater than three times the thickness of the wall. (Commentary: Sec. A.3.2.2.6. Tier 2: Sec. 5.5.3.1.5)

WALL THICKNESS: Thickness of bearing walls is not less than 1/25 the unsupported height or length, whichever is shorter, nor less than 4 in. (Commentary: Sec. A.3.2.3.5. Tier 2: Sec. 5.5.3.1.2)

Diaphragms OPENINGS AT SHEAR WALLS: Diaphragm openings immediately adjacent to the shear walls are less than 15% of the wall length. (Commentary: Sec. A.4.1.4. Tier 2: Sec. 5.5.3.2.1)

PLAN IRREGULARITIES: There is tensile capacity to develop the strength of the diaphragm at reentrant corners or other locations of plan irregularities. (Commentary: Sec. A.4.1.7. Tier 2: Sec. 5.6.1.4)

DIAPHRAGM REINFORCEMENT AT OPENINGS: There is reinforcing around all diaphragm openings larger than 50% of the building width in either major plan dimension. (Commentary: Sec. A.4.1.8. Tier 2: Sec. 5.6.1.5)

Connections UPLIFT AT PILE CAPS: Pile caps have top reinforcement, and piles are anchored to the pile caps; the pile cap reinforcement and pile anchorage are able to develop the tensile capacity of the piles. (Commentary: Sec. A.5.3.8. Tier 2: Sec. 5.7.3.5)

CORBEL BEARING: If the frame girders bear on column corbels, the length of bearing is greater than 3 in. (Commentary: Sec. A.5.4.3. Tier 2: Sec. 5.7.4.3)

CORBEL CONNECTIONS: The frame girders are not connected to corbels with welded elements. (Commentary: Sec. A.5.4.4. Tier 2: Sec. 5.7.4.3)

16.14LS LIFE SAFETY STRUCTURAL CHECKLIST FOR BUILDING TYPE PC2A: PRECAST CONCRETE FRAMES WITHOUT SHEAR WALLS

This Life Safety Structural Checklist shall be completed where required by Table 4-7 and where the building configuration complies with the description of PC2a building type defined in Table 3-1. Tier 1 screening shall include on-site investigation and condition assessment as required by Section 4.2.1.

Each of the evaluation statements in this checklist shall be marked Compliant (C), Noncompliant (NC), Not Applicable (N/A), or Unknown (U) for a Tier 1 screening. Compliant statements identify issues that are acceptable according to the criteria of this standard, whereas unknown or noncompliant statements identify issues that require further investigation. Certain statements may not apply to the buildings being evaluated. For unknown or noncompliant evaluation statements, the design professional may choose to conduct further investigation using the corresponding Tier 2 evaluation procedure; corresponding section numbers are in parentheses after each evaluation statement.

C16.14LS LIFE SAFETY STRUCTURAL CHECKLIST FOR BUILDING TYPE PC2A: PRECAST CONCRETE FRAMES WITHOUT SHEAR WALLS

These buildings are similar to PC2 buildings, except that concrete shear walls are not present. Seismic forces are resisted by precast concrete moment frames that develop their stiffness through beam–column joints rigidly connected by welded inserts or cast-in-place concrete closures. Diaphragms consist of precast elements interconnected with welded inserts, cast-in-place closure strips, or reinforced concrete topping slabs. Foundations consist of concrete spread footings, strip footings, or deep pile foundations.

Low and Moderate Seismicity

Seismic-Force-Resisting System REDUNDANCY: The number of lines of moment frames in each principal direction is greater than or equal to 2. The number of bays of moment frames in each line is greater than or equal to 2. (Commentary: Sec. A.3.1.1.1. Tier 2: Sec. 5.5.1.1)

COLUMN SHEAR STRESS CHECK: The shear stress in the concrete columns, calculated using the Quick Check procedure of Section 4.5.3.2, is less than the greater of 100 lb/in.^{2} or $2\sqrt{f_c'}$. (Commentary: Sec. A.3.1.4.1. Tier 2: Sec. 5.5.2.3.4)

COLUMN AXIAL STRESS CHECK: The axial stress caused by gravity loads in columns subjected to overturning forces is less than $0.10f_c'$. Alternatively, the axial stress caused by overturning forces alone, calculated using the Quick Check procedure of Section 4.5.3.6, is less than $0.30f_c'$. (Commentary: Sec. A.3.1.4.2. Tier 2: Sec. 5.5.2.1.3)

PRECAST CONNECTION CHECK: The precast connections at frame joints have the capacity to resist the shear and moment

demands calculated using the Quick Check procedure of Section 4.5.3.5. (Commentary: Sec. A.3.1.5.1. Tier 2: Sec. 5.5.2.4)

Diaphragms TOPPING SLAB: Precast concrete diaphragm elements are interconnected by a continuous reinforced concrete topping slab with a minimum thickness of 2 in. (Commentary: Sec. A.4.5.1. Tier 2: Sec. 5.6.4)

Connections TOPPING SLAB TO WALLS OR FRAMES: Reinforced concrete topping slabs that interconnect the precast concrete diaphragm elements are doweled for transfer of forces into the shear wall or frame elements, and the dowels are able to develop the least of the shear strength of the walls, frames, or slabs. (Commentary: Sec. A.5.2.3. Tier 2: Sec. 5.7.2)

GIRDER–COLUMN CONNECTION: There is a positive connection using plates, connection hardware, or straps between the girder and the column support. (Commentary: Sec. A.5.4.1. Tier 2: Sec. 5.7.4.1)

High Seismicity (Complete the Following Items in Addition to Those for Low and Moderate Seismicity)

Seismic-Force-Resisting System PRESTRESSED FRAME ELEMENTS: The seismic-force-resisting frames do not include any prestressed or posttensioned elements where the average prestress exceeds the lesser of 700 lb/in.^{2} or $f_c'/6$ at potential hinge locations. The average prestress is calculated in accordance with the Quick Check procedure of Section 4.5.3.8. (Commentary: Sec. A.3.1.4.4. Tier 2: Sec. 5.5.2.3.2)

CAPTIVE COLUMNS: There are no columns at a level with height/depth ratios less than 50% of the nominal height/depth ratio of the typical columns at that level. (Commentary: Sec. A.3.1.4.5. Tier 2: Sec. 5.5.2.3.3)

JOINT REINFORCING: Beam–column joints have ties spaced at or less than $8d_b$. (Commentary: Sec. A.3.1.4.13. Tier 2: Sec. 5.5.2.3.8)

DEFLECTION COMPATIBILITY: Secondary components have the shear capacity to develop the flexural strength of the components. (Commentary: Sec. A.3.1.6.2. Tier 2: Sec. 5.5.2.5.2)

Connections UPLIFT AT PILE CAPS: Pile caps have top reinforcement, and piles are anchored to the pile caps. (Commentary: Sec. A.5.3.8. Tier 2: Sec. 5.7.3.5)

GIRDERS: Girders supported by walls or pilasters have at least two ties securing the anchor bolts unless provided with independent stiff wall anchors with adequate strength to resist the connection force calculated in the Quick Check procedure of Section 4.5.3.7. (Commentary: Sec. A.5.4.2. Tier 2: Sec. 5.7.4.1)

CORBEL BEARING: If the frame girders bear on column corbels, the length of bearing is greater than 3 in. (Commentary: Sec. A.5.4.3. Tier 2: Sec. 5.7.4.3)

CORBEL CONNECTIONS: The frame girders are not connected to corbels with welded elements. (Commentary: Sec. A.5.4.4. Tier 2: Sec. 5.7.4.3)

16.14IO IMMEDIATE OCCUPANCY STRUCTURAL CHECKLIST FOR BUILDING TYPE PC2A: PRECAST CONCRETE FRAMES WITHOUT SHEAR WALLS

This Immediate Occupancy Checklist shall be completed where required by Table 4-7 and where the building configuration complies with the description of PC2a building type defined in Table 3-1. Tier 1 screening shall include on-site investigation and condition assessment as required by Section 4.2.1.

Each of the evaluation statements in this checklist shall be marked Compliant (C), Noncompliant (NC), Not Applicable (N/A), or Unknown (U) for a Tier 1 screening. Compliant statements identify issues that are acceptable according to the criteria of this standard, whereas unknown and noncompliant statements identify issues that require further investigation. Certain statements may not apply to the buildings being evaluated. For unknown or noncompliant evaluation statements, the design professional may choose to conduct further investigation using the corresponding Tier 2 evaluation procedure; corresponding section numbers are in parentheses after each evaluation statement.

C16.14IO IMMEDIATE OCCUPANCY STRUCTURAL CHECKLIST FOR BUILDING TYPE PC2A: PRECAST CONCRETE FRAMES WITHOUT SHEAR WALLS

These buildings are similar to PC2 buildings, except that concrete shear walls are not present. Seismic forces are resisted by precast concrete moment frames that develop their stiffness through beam–column joints rigidly connected by welded inserts or cast-in-place concrete closures. Diaphragms consist of precast elements interconnected with welded inserts, cast-in-place closure strips, or reinforced concrete topping slabs.

Very Low Seismicity

Seismic-Force-Resisting System REDUNDANCY: The number of lines of moment frames in each principal direction is greater than or equal to 2. The number of bays of moment frames in each line is greater than or equal to 3. (Commentary: Sec. A.3.1.1.1. Tier 2: Sec. 5.5.1.1)

COLUMN SHEAR STRESS CHECK: The shear stress in the concrete columns, calculated using the Quick Check procedure of Section 4.5.3.2, is less than the greater of 100 lb/in.^{2} or $2\sqrt{f_c'}$. (Commentary: Sec. A.3.1.4.1. Tier 2: Sec. 5.5.2.3.4)

COLUMN AXIAL STRESS CHECK: The axial stress caused by gravity loads in columns subjected to overturning forces is less than $0.10f_c'$. Alternatively, the axial stresses caused by overturning forces alone, calculated using the Quick Check procedure of Section 4.5.3.6, is less than $0.30f_c'$. (Commentary: Sec. A.3.1.4.2. Tier 2: Sec. 5.5.2.1.3)

PRECAST CONNECTION CHECK: The precast connections at frame joints have the capacity to resist the shear and moment demands calculated using the Quick Check procedure of Section 4.5.3.5. (Commentary: Sec. A.3.1.5.1. Tier 2: Sec. 5.5.2.4)

Diaphragms TOPPING SLAB: Precast concrete diaphragm elements are interconnected by a continuous reinforced concrete topping slab with a minimum thickness of 2 in. (Commentary: Sec. A.4.5.1. Tier 2: Sec. 5.6.4)

Connections TOPPING SLAB TO WALLS OR FRAMES: Reinforced concrete topping slabs that interconnect the precast concrete diaphragm elements are doweled for transfer of forces into the shear wall or frame elements, and the dowels are able to develop the least of the shear strength of the walls, frames, or slabs. (Commentary: Sec. A.5.2.3. Tier 2: Sec. 5.7.2)

GIRDER–COLUMN CONNECTION: There is a positive connection using plates, connection hardware, or straps between the girder and the column support. (Commentary: Sec. A.5.4.1. Tier 2: Sec. 5.7.4.1)

Low, Moderate, and High Seismicity (Complete the Following Items in Addition to Those for Very Low Seismicity)

Seismic-Force-Resisting System PRESTRESSED FRAME ELEMENTS: The seismic-force-resisting frames do not include any prestressed or posttensioned elements where the average prestress exceeds the lesser of 700 lb/in.^{2} or $f_c'/6$ at potential

hinge locations. The average prestress is calculated in accordance with the Quick Check procedure of Section 4.5.3.8. (Commentary: Sec. A.3.1.4.4. Tier 2: Sec. 5.5.2.3.2)

CAPTIVE COLUMNS: There are no columns at a level with height/depth ratios less than 75% of the nominal height/depth ratio of the typical columns at that level. (Commentary: Sec. A.3.1.4.5. Tier 2: Sec. 5.5.2.3.3)

JOINT REINFORCING: Beam–column joints have ties spaced at or less than $8d_b$. (Commentary: Sec. A.3.1.4.13. Tier 2: Sec. 5.5.2.3.8)

DEFLECTION COMPATIBILITY: Secondary components shall have the shear capacity to develop the flexural strength of the components. (Commentary: Sec. A.3.1.6.2. Tier 2: Sec. 5.5.2.5.2)

Diaphragms PLAN IRREGULARITIES: There is tensile capacity to develop the strength of the diaphragm at reentrant corners or other locations of plan irregularities. (Commentary: Sec. A.4.1.7. Tier 2: Sec. 5.6.1.4)

DIAPHRAGM REINFORCEMENT AT OPENINGS: There is reinforcing around all diaphragm openings larger than 50% of the building width in either major plan dimension. (Commentary: Sec. A.4.1.8. Tier 2: Sec. 5.6.1.5)

Connections UPLIFT AT PILE CAPS: Pile caps have top reinforcement, and piles are anchored to the pile caps; the pile cap reinforcement and pile anchorage are able to develop the tensile capacity of the piles. (Commentary: Sec. A.5.3.8. Tier 2: Sec. 5.7.3.5)

GIRDERS: Girders supported by frames have at least two ties securing the anchor bolts unless provided with independent stiff wall anchors with adequate strength to resist the connection force calculated in the Quick Check procedure of Section 4.5.3.7. (Commentary: Sec. A.5.4.2. Tier 2: Sec. 5.7.4.1)

CORBEL BEARING: If the frame girders bear on column corbels, the length of bearing is greater than 3 in. (Commentary: Sec. A.5.4.3. Tier 2: Sec. 5.7.4.3)

CORBEL CONNECTIONS: The frame girders are not connected to corbels with welded elements. (Commentary: Sec. A.5.4.4. Tier 2: Sec. 5.7.4.3)

TRANSFER TO FRAMES: Diaphragms are connected for transfer of loads to the frames. (Commentary: Sec. A.5.2.1. Tier 2: Sec. 5.7.2)

16.15LS LIFE SAFETY STRUCTURAL CHECKLIST FOR BUILDING TYPES RM1: REINFORCED MASONRY BEARING WALLS WITH FLEXIBLE DIAPHRAGMS AND RM2: REINFORCED MASONRY BEARING WALLS WITH STIFF DIAPHRAGMS

This Life Safety Structural Checklist shall be completed where required by Table 4-7 and where the building configuration complies with the description of RM1 or RM2 building type defined in Table 3-1. Tier 1 screening shall include on-site investigation and condition assessment as required by Section 4.2.1.

Each of the evaluation statements in this checklist shall be marked Compliant (C), Noncompliant (NC), Not Applicable (N/A), or Unknown (U) for a Tier 1 screening. Compliant statements identify issues that are acceptable according to the criteria of this standard, whereas noncompliant and unknown statements identify issues that require further investigation. Certain statements may not apply to the buildings being evaluated. For noncompliant and unknown evaluation statements, the design professional may choose to conduct further investigation using the corresponding Tier 2 evaluation procedure; corresponding section numbers are in parentheses after each evaluation statement.

C16.15LS LIFE SAFETY STRUCTURAL CHECKLIST FOR BUILDING TYPES RM1: REINFORCED MASONRY BEARING WALLS WITH FLEXIBLE DIAPHRAGMS AND RM2: REINFORCED MASONRY BEARING WALLS WITH STIFF DIAPHRAGMS

Building Type RM1: Reinforced Masonry Bearing Walls with Flexible Diaphragms These buildings have bearing walls that consist of reinforced brick or concrete block masonry. Wood floor and roof framing consists of wood joists, glulam beams, and wood posts or small steel columns. Steel floor and roof framing consists of steel beams or open web joists, steel girders, and steel columns. Seismic forces are resisted by the reinforced brick or concrete block masonry shear walls. Diaphragms consist of straight or diagonal wood sheathing; untopped metal deck; or metal deck with lightweight insulating concrete, poured gypsum, or similar nonstructural topping and are flexible relative to the walls. Foundations consist of brick or concrete spread footings or deep foundations.

Building Type RM2: Reinforced Masonry Bearing Walls with Stiff Diaphragms These buildings are similar to building type RM1 except that diaphragms consist of metal deck with concrete fill, precast concrete planks, Tees, or double-Tees, with or without a cast-in-place concrete topping slab, and are stiff relative to the walls.

Low and Moderate Seismicity

Seismic-Force-Resisting System REDUNDANCY: The number of lines of shear walls in each principal direction is greater than or equal to 2. (Commentary: Sec. A.3.2.1.1. Tier 2: Sec. 5.5.1.1)

SHEAR STRESS CHECK: The shear stress in the reinforced masonry shear walls, calculated using the Quick Check procedure of Section 4.5.3.3, is less than 70 lb/in.^{2} (Commentary: Sec. A.3.2.4.1. Tier 2: Sec. 5.5.3.1.1)

REINFORCING STEEL: The total vertical and horizontal reinforcing steel ratio in reinforced masonry walls is greater than 0.002 of the wall with the minimum of 0.0007 in either of the two directions; the spacing of reinforcing steel is less than 48 in., and all vertical bars extend to the top of the walls. (Commentary: Sec. A.3.2.4.2. Tier 2: Sec. 5.5.3.1.3)

Stiff Diaphragms TOPPING SLAB: Precast concrete diaphragm elements are interconnected by a continuous reinforced concrete topping slab. (Commentary: Sec. A.4.5.1. Tier 2: Sec. 5.6.4)

Connections WALL ANCHORAGE: Exterior concrete or masonry walls that are dependent on the diaphragm for lateral support are anchored for out-of-plane forces at each diaphragm level with steel anchors, reinforcing dowels, or straps that are developed into the diaphragm. Connections shall have adequate strength to resist the connection force calculated in the Quick Check procedure of Section 4.5.3.7. (Commentary: Sec. A.5.1.1. Tier 2: Sec. 5.7.1.1)

WOOD LEDGERS: The connection between the wall panels and the diaphragm does not induce cross-grain bending or tension in the wood ledgers. (Commentary: Sec. A.5.1.2. Tier 2: Sec. 5.7.1.3)

TRANSFER TO SHEAR WALLS: Diaphragms are connected for transfer of seismic forces to the shear walls. (Commentary: Sec. A.5.2.1. Tier 2: Sec. 5.7.2)

TOPPING SLAB TO WALLS OR FRAMES: Reinforced concrete topping slabs that interconnect the precast concrete diaphragm elements are doweled for transfer of forces into the shear wall or frame elements. (Commentary: Sec. A.5.2.3. Tier 2: Sec. 5.7.2)

FOUNDATION DOWELS: Wall reinforcement is doweled into the foundation. (Commentary: Sec. A.5.3.5. Tier 2: Sec. 5.7.3.4)

GIRDER–COLUMN CONNECTION: There is a positive connection using plates, connection hardware, or straps between the girder and the column support. (Commentary: Sec. A.5.4.1. Tier 2: Sec. 5.7.4.1)

High Seismicity (Complete the Following Items in Addition to the Items for Low and Moderate Seismicity)

Stiff Diaphragms OPENINGS AT SHEAR WALLS: Diaphragm openings immediately adjacent to the shear walls are less than 25% of the wall length. (Commentary: Sec. A.4.1.4. Tier 2: Sec. 5.6.1.3)

OPENINGS AT EXTERIOR MASONRY SHEAR WALLS: Diaphragm openings immediately adjacent to exterior masonry shear walls are not greater than 8 ft long. (Commentary: Sec. A.4.1.6. Tier 2: Sec. 5.6.1.3)

Flexible Diaphragms CROSS TIES: There are continuous cross ties between diaphragm chords. (Commentary: Sec. A.4.1.2. Tier 2: Sec. 5.6.1.2)

OPENINGS AT SHEAR WALLS: Diaphragm openings immediately adjacent to the shear walls are less than 25% of the wall length. (Commentary: Sec. A.4.1.4. Tier 2: Sec. 5.6.1.3)

OPENINGS AT EXTERIOR MASONRY SHEAR WALLS: Diaphragm openings immediately adjacent to exterior masonry shear walls are not greater than 8 ft long. (Commentary: Sec. A.4.1.6. Tier 2: Sec. 5.6.1.3)

STRAIGHT SHEATHING: All straight sheathed diaphragms have aspect ratios less than 2-to-1 in the direction being considered. (Commentary: Sec. A.4.2.1. Tier 2: Sec. 5.6.2)

SPANS: All wood diaphragms with spans greater than 24 ft consist of wood structural panels or diagonal sheathing. (Commentary: Sec. A.4.2.2. Tier 2: Sec. 5.6.2)

DIAGONALLY SHEATHED AND UNBLOCKED DIAPHRAGMS: All diagonally sheathed or unblocked wood structural panel diaphragms have horizontal spans less than 40 ft and aspect ratios less than or equal to 4-to-1. (Commentary: Sec. A.4.2.3. Tier 2: Sec. 5.6.2)

OTHER DIAPHRAGMS: The diaphragm shall not consist of a system other than wood, metal deck, concrete, or horizontal bracing. (Commentary: Sec. A.4.7.1. Tier 2: Sec. 5.6.5)

Connections STIFFNESS OF WALL ANCHORS: Anchors of concrete or masonry walls to wood structural elements are installed taut and are stiff enough to limit the relative movement between the wall and the diaphragm to no greater than 1/8 in. before engagement of the anchors. (Commentary: Sec. A.5.1.4. Tier 2: Sec. 5.7.1.2)

16.15IO IMMEDIATE OCCUPANCY STRUCTURAL CHECKLIST FOR BUILDING TYPES RM1: REINFORCED MASONRY BEARING WALLS AND RM1A: REINFORCED MASONRY BEARING WALLS WITH STIFF DIAPHRAGMS

This Immediate Occupancy Structural Checklist shall be completed where required by Table 4-7 and where the building configuration complies with the description of RM1 or RM1a building type defined in Table 3-1. Tier 1 screening shall include on-site investigation and condition assessment as required by Section 4.2.1.

Each of the evaluation statements in this checklist shall be marked Compliant (C), Noncompliant (NC), Not Applicable (N/A), or Unknown (U) for a Tier 1 screening. Compliant statements identify issues that are acceptable according to the criteria of this standard, whereas noncompliant and unknown statements identify issues that require further investigation. Certain statements may not apply to the buildings being evaluated. For noncompliant and unknown evaluation statements, the design professional may choose to conduct further investigation using the corresponding Tier 2 evaluation procedure; corresponding section numbers are in parentheses after each evaluation statement.

C16.15IO IMMEDIATE OCCUPANCY STRUCTURAL CHECKLIST FOR BUILDING TYPES RM1: REINFORCED MASONRY BEARING WALLS WITH FLEXIBLE DIAPHRAGMS AND RM1A: REINFORCED MASONRY BEARING WALLS WITH STIFF DIAPHRAGMS

Building Type RM1: Reinforced Masonry Bearing Walls with Flexible Diaphragms These buildings have bearing walls that consist of reinforced brick or concrete block masonry. Wood floor and roof framing consists of wood joists, glulam beams, and wood posts or small steel columns. Steel floor and roof framing consists of steel beams or open web joists, steel girders, and steel columns. Seismic forces are resisted by the reinforced brick or concrete block masonry shear walls. Diaphragms consist of wood sheathing; untopped metal deck; or metal deck with lightweight insulating concrete, poured gypsum, or similar nonstructural topping and are flexible relative to the walls. Foundations consist of brick or concrete spread footings or deep foundations.

Building Type RM1a: Reinforced Masonry Bearing Walls with Stiff Diaphragms These buildings are similar to building type RM1, except that diaphragms consist of metal deck with concrete fill, precast concrete planks, Tees, or double-Tees, with or without a cast-in-place concrete topping slab, and are stiff relative to the walls.

Very Low Seismicity

Seismic-Force-Resisting System REDUNDANCY: The number of lines of shear walls in each principal direction is greater than or equal to 2. (Commentary: Sec. A.3.2.1.1. Tier 2: Sec. 5.5.1.1)

SHEAR STRESS CHECK: The shear stress in the reinforced masonry shear walls, calculated using the Quick Check procedure of Section 4.5.3.3, is less than 70 lb/in.^{2} (Commentary: Sec. A.3.2.4.1. Tier 2: Sec. 5.5.3.1.1)

REINFORCING STEEL: The total vertical and horizontal reinforcing steel ratio in reinforced masonry walls is greater than 0.002 of the wall with the minimum of 0.0007 in either of the two directions; the spacing of reinforcing steel is less than 48 in., and all vertical bars extend to the top of the walls. (Commentary: Sec. A.3.2.4.2. Tier 2: Sec. 5.5.3.1.3)

Connections WOOD LEDGERS: The connection between the wall panels and the diaphragm does not induce cross-grain bending or tension in the wood ledgers. (Commentary: Sec. A.5.1.2. Tier 2: Sec. 5.7.1.3)

TRANSFER TO SHEAR WALLS: Diaphragms are connected for transfer of seismic forces to the shear walls, and the connections are able to develop the lesser of the shear strength of the walls or diaphragms. (Commentary: Sec. A.5.2.1. Tier 2: Sec. 5.7.2)

FOUNDATION DOWELS: Wall reinforcement is doweled into the foundation, and the dowels are able to develop the lesser of the strength of the walls or the uplift capacity of the foundation. (Commentary: Sec. A.5.3.5. Tier 2: Sec. 5.7.3.4)

GIRDER–COLUMN CONNECTION: There is a positive connection using plates, connection hardware, or straps between the girder and the column support. (Commentary: Sec. A.5.4.1. Tier 2: Sec. 5.7.4.1)

WALL ANCHORAGE: Exterior concrete or masonry walls that are dependent on the diaphragm for lateral support are anchored for out-of-plane forces at each diaphragm level with steel anchors, reinforcing dowels, or straps that are developed into the diaphragm. Connections shall have adequate strength to resist the connection force calculated in the Quick Check procedure of Section 4.5.3.7. (Commentary: Sec. A.5.1.1. Tier 2: Sec. 5.7.1.1)

Stiff Diaphragms TOPPING SLAB: Precast concrete diaphragm elements are interconnected by a continuous reinforced concrete topping slab. (Commentary: Sec. A.4.5.1. Tier 2: Sec. 5.6.4)

TOPPING SLAB TO WALLS OR FRAMES: Reinforced concrete topping slabs that interconnect the precast concrete diaphragm elements are doweled for transfer of forces into the shear wall or frame elements. (Commentary: Sec. A.5.2.3. Tier 2: Sec. 5.7.2)

Foundation System DEEP FOUNDATIONS: Piles and piers are capable of transferring the lateral forces between the structure and the soil. (Commentary: Sec. A.6.2.3.)

SLOPING SITES: The difference in foundation embedment depth from one side of the building to another shall not exceed one story high. (Commentary: Sec. A.6.2.4)

Low, Moderate, and High Seismicity (Complete the Following Items in Addition to the Items for Very Low Seismicity)

Seismic-Force-Resisting System REINFORCING AT WALL OPENINGS: All wall openings that interrupt rebar have trim reinforcing on all sides. (Commentary: Sec. A.3.2.4.3. Tier 2: Sec. 5.5.3.1.5)

PROPORTIONS: The height-to-thickness ratio of the shear walls at each story is less than 30. (Commentary: Sec. A.3.2.4.4. Tier 2: Sec. 5.5.3.1.2)

Diaphragms (Stiff or Flexible) OPENINGS AT SHEAR WALLS: Diaphragm openings immediately adjacent to the shear walls are less than 15% of the wall length. (Commentary: Sec. A.4.1.4. Tier 2: Sec. 5.6.1.3)

OPENINGS AT EXTERIOR MASONRY SHEAR WALLS: Diaphragm openings immediately adjacent to exterior masonry shear walls are not greater than 4 ft long. (Commentary: Sec. A.4.1.6. Tier 2: Sec. 5.6.1.3)

PLAN IRREGULARITIES: There is tensile capacity to develop the strength of the diaphragm at reentrant corners or other locations of plan irregularities. (Commentary: Sec. A.4.1.7. Tier 2: Sec. 5.6.1.4)

DIAPHRAGM REINFORCEMENT AT OPENINGS: There is reinforcing around all diaphragm openings larger than 50% of the building width in either major plan dimension. (Commentary: Sec. A.4.1.8. Tier 2: Sec. 5.6.1.5)

Flexible Diaphragms CROSS TIES: There are continuous cross ties between diaphragm chords. (Commentary: Sec. A.4.1.2. Tier 2: Sec. 5.6.1.2)

STRAIGHT SHEATHING: All straight sheathed diaphragms have aspect ratios less than 1-to-1 in the direction being considered. (Commentary: Sec. A.4.2.1. Tier 2: Sec. 5.6.2)

SPANS: All wood diaphragms with spans greater than 12 ft consist of wood structural panels or diagonal sheathing. (Commentary: Sec. A.4.2.2. Tier 2: Sec. 5.6.2)

DIAGONALLY SHEATHED AND UNBLOCKED DIAPHRAGMS: All diagonally sheathed or unblocked wood structural panel diaphragms have horizontal spans less than 30 ft and aspect ratios less than or equal to 3-to-1. (Commentary: Sec. A.4.2.2. Tier 2: Sec. 5.6.2)

NONCONCRETE FILLED DIAPHRAGMS: Untopped metal deck diaphragms or metal deck diaphragms with fill other than concrete consist of horizontal spans of less than 40 ft and have aspect ratios less than 4-to-1. (Commentary: Sec. A.4.3.1. Tier 2: Sec. 5.6.3)

OTHER DIAPHRAGMS: The diaphragm does not consist of a system other than wood, metal deck, concrete, or horizontal bracing. (Commentary: Sec. A.4.7.1. Tier 2: Sec. 5.6.5)

Connections STIFFNESS OF WALL ANCHORS: Anchors of concrete or masonry walls to wood structural elements are installed taut and are stiff enough to limit the relative movement between the wall and the diaphragm to no greater than 1/8 in. before engagement of the anchors. (Commentary: Sec. A.5.1.4. Tier 2: Sec. 5.7.1.2)

16.16LS LIFE SAFETY STRUCTURAL CHECKLIST FOR BUILDING TYPES URM: UNREINFORCED MASONRY BEARING WALLS WITH FLEXIBLE DIAPHRAGMS AND URMA: UNREINFORCED MASONRY BEARING WALLS WITH STIFF DIAPHRAGMS

This Life Safety Structural Checklist shall be completed where required by Table 4-7 and where the building configuration complies with the description of URM or URMa building type defined in Table 3-1. Tier 1 screening shall include on-site investigation and condition assessment as required by Section 4.2.1.

Each of the evaluation statements in this checklist shall be marked Compliant (C), Noncompliant (NC), Not Applicable (N/A), or Unknown (U) for a Tier 1 screening. Compliant statements identify issues that are acceptable according to the criteria of this standard, whereas noncompliant and unknown statements identify issues that require further investigation. Certain statements may not apply to the buildings being evaluated. For noncompliant and unknown evaluation statements, the design professional may choose to conduct further investigation using the corresponding Tier 2 evaluation procedure; corresponding section numbers are in parentheses after each evaluation statement.

C16.16LS LIFE SAFETY STRUCTURAL CHECKLIST FOR BUILDING TYPES URM: UNREINFORCED MASONRY BEARING WALLS WITH FLEXIBLE DIAPHRAGMS AND URMA: UNREINFORCED MASONRY BEARING WALLS WITH STIFF DIAPHRAGMS

Building Type URM: Unreinforced Masonry Bearing Walls with Flexible Diaphragms These buildings have bearing walls

that consist of unreinforced (or lightly reinforced) brick, stone, or concrete block masonry. Wood floor and roof framing consists of wood joists, glulam beams, and wood posts or small steel columns. Steel floor and roof framing consists of steel beams or open web joists, steel girders, and steel columns. Seismic forces are resisted by the brick or concrete block masonry shear walls. Diaphragms consist of straight or diagonal lumber sheathing, structural wood panels, or untopped metal deck, and are flexible relative to the walls. Foundations consist of brick or concrete spread footings or deep foundations.

Building Type URMa: Unreinforced Masonry Bearing Walls with Stiff Diaphragms These buildings are similar to building type URM, except that diaphragms are stiff relative to the unreinforced masonry walls and interior framing. In older construction or large, multi-story buildings, diaphragms consist of cast-in-place concrete. In Low Seismicity, more recent construction consists of metal deck and concrete fill supported on steel framing.

Low and Moderate Seismicity

Seismic-Force-Resisting System REDUNDANCY: The number of lines of shear walls in each principal direction is greater than or equal to 2. (Commentary: Sec. A.3.2.1.1. Tier 2: Sec. 5.5.1.1)

SHEAR STRESS CHECK: The shear stress in the unreinforced masonry shear walls, calculated using the Quick Check procedure of Section 4.5.3.3, is less than 30 lb/in.^{2} for clay units and 70 lb/in.^{2} for concrete units. (Commentary: Sec. A.3.2.5.1. Tier 2: Sec. 5.5.3.1.1)

Connections WALL ANCHORAGE: Exterior concrete or masonry walls that are dependent on the diaphragm for lateral support are anchored for out-of-plane forces at each diaphragm level with steel anchors, reinforcing dowels, or straps that are developed into the diaphragm. Connections shall have adequate strength to resist the connection force calculated in the Quick Check procedure of Section 4.5.3.7. (Commentary: Sec. A.5.1.1. Tier 2: Sec. 5.7.1.1)

WOOD LEDGERS: The connection between the wall panels and the diaphragm does not induce cross-grain bending or tension in the wood ledgers. (Commentary: Sec. A.5.1.2. Tier 2: Sec. 5.7.1.3)

TRANSFER TO SHEAR WALLS: Diaphragms are connected for transfer of seismic forces to the shear walls. (Commentary: Sec. A.5.2.1. Tier 2: Sec. 5.7.2)

GIRDER–COLUMN CONNECTION: There is a positive connection using plates, connection hardware, or straps between the girder and the column support. (Commentary: Sec. A.5.4.1. Tier 2: Sec. 5.7.4.1)

High Seismicity (Complete the Following Items in Addition to the Items for Low and Moderate Seismicity)

Seismic-Force-Resisting System PROPORTIONS: The height-to-thickness ratio of the shear walls at each story is less than the following (Commentary: Sec. A.3.2.5.2. Tier 2: Sec. 5.5.3.1.2):

Top story of multi-story building	9
First story of multi-story building	15
All other conditions	13

MASONRY LAYUP: Filled collar joints of multi-wythe masonry walls have negligible voids. (Commentary: Sec. A.3.2.5.3. Tier 2: Sec. 5.5.3.4.1)

Diaphragms (Stiff or Flexible) OPENINGS AT SHEAR WALLS: Diaphragm openings immediately adjacent to the shear walls are less than 25% of the wall length. (Commentary: Sec. A.4.1.4. Tier 2: Sec. 5.6.1.3)

OPENINGS AT EXTERIOR MASONRY SHEAR WALLS: Diaphragm openings immediately adjacent to exterior masonry shear walls are not greater than 8 ft long. (Commentary: Sec. A.4.1.6. Tier 2: Sec. 5.6.1.3)

Flexible Diaphragms CROSS TIES: There are continuous cross ties between diaphragm chords. (Commentary: Sec. A.4.1.2. Tier 2: Sec. 5.6.1.2)

STRAIGHT SHEATHING: All straight sheathed diaphragms have aspect ratios less than 2-to-1 in the direction being considered. (Commentary: Sec. A.4.2.1. Tier 2: Sec. 5.6.2)

SPANS: All wood diaphragms with spans greater than 24 ft consist of wood structural panels or diagonal sheathing. (Commentary: Sec. A.4.2.2. Tier 2: Sec. 5.6.2)

DIAGONALLY SHEATHED AND UNBLOCKED DIAPHRAGMS: All diagonally sheathed or unblocked wood structural panel diaphragms have horizontal spans less than 40 ft and aspect ratios less than or equal to 4-to-1. (Commentary: Sec. A.4.2.3. Tier 2: Sec. 5.6.2)

OTHER DIAPHRAGMS: The diaphragm does not consist of a system other than wood, metal deck, concrete, or horizontal bracing. (Commentary: Sec. A.4.7.1. Tier 2: Sec. 5.6.5)

Connections STIFFNESS OF WALL ANCHORS: Anchors of concrete or masonry walls to wood structural elements are installed taut and are stiff enough to limit the relative movement between the wall and the diaphragm to no greater than 1/8 in. before engagement of the anchors. (Commentary: Sec. A.5.1.4. Tier 2: Sec. 5.7.1.2)

BEAM, GIRDER, AND TRUSS SUPPORTS: Beams, girders, and trusses supported by unreinforced masonry walls or pilasters have independent secondary columns for support of vertical loads. (Commentary: Sec. A.5.4.5. Tier 2: Sec. 5.7.4.4)

16.16IO IMMEDIATE OCCUPANCY STRUCTURAL CHECKLIST FOR BUILDING TYPES URM: UNREINFORCED MASONRY BEARING WALLS WITH FLEXIBLE DIAPHRAGMS AND URMA: UNREINFORCED MASONRY BEARING WALLS WITH STIFF DIAPHRAGMS

This Immediate Occupancy Structural Checklist shall be completed where required by Table 4-7 and where the building configuration complies with the description of URM or URMa building type defined in Table 3-1. Tier 1 screening shall include on-site investigation and condition assessment as required by Section 4.2.1.

Each of the evaluation statements in this checklist shall be marked Compliant (C), Noncompliant (NC), Not Applicable (N/A), or Unknown (U) for a Tier 1 screening. Compliant statements identify issues that are acceptable according to the criteria of this standard, whereas noncompliant and unknown statements identify issues that require further investigation. Certain statements may not apply to the buildings being evaluated. For noncompliant and unknown evaluation statements, the design professional may choose to conduct further investigation using the corresponding Tier 2 evaluation procedure; corresponding section numbers are in parentheses after each evaluation statement.

C16.16IO IMMEDIATE OCCUPANCY STRUCTURAL CHECKLIST FOR BUILDING TYPES URM: UNREINFORCED MASONRY BEARING WALLS WITH FLEXIBLE DIAPHRAGMS AND URMA: UNREINFORCED MASONRY BEARING WALLS WITH STIFF DIAPHRAGMS

Building Type URM: Unreinforced Masonry Bearing Walls with Flexible Diaphragms These buildings have bearing walls that consist of unreinforced (or lightly reinforced) brick, stone, or concrete block masonry. Wood floor and roof framing consists of wood joists, glulam beams, and wood posts or small steel columns. Steel floor and roof framing consists of steel beams or open web joists, steel girders, and steel columns. Seismic forces are resisted by the brick or concrete block masonry shear walls. Diaphragms consist of straight or diagonal lumber sheathing, structural wood panels, or untopped metal deck, and are flexible relative to the walls. Foundations consist of brick or concrete spread footings or deep foundations.

Building Type URMa: Unreinforced Masonry Bearing Walls with Stiff Diaphragms These buildings are similar to building type URM except that diaphragms are stiff relative to the unreinforced masonry walls and interior framing. In older construction or large, multi-story buildings, diaphragms consist of cast-in-place concrete. In Low Seismicity, more recent construction consists of metal deck and concrete fill supported on steel framing.

Very Low Seismicity

Seismic-Force-Resisting System REDUNDANCY: The number of lines of shear walls in each principal direction is greater than or equal to 2. (Commentary: Sec. A.3.2.1.1. Tier 2: Sec. 5.5.1.1)

SHEAR STRESS CHECK: The shear stress in the unreinforced masonry shear walls, calculated using the Quick Check procedure of Section 4.5.3.3, is less than 30 lb/in.^{2} for clay units and 70 lb/in.^{2} for concrete units. (Commentary: Sec. A.3.2.5.1. Tier 2: Sec. 5.5.3.1.1)

Connections WALL ANCHORAGE: Exterior concrete or masonry walls that are dependent on the diaphragm for lateral support are anchored for out-of-plane forces at each diaphragm level with steel anchors, reinforcing dowels, or straps that are developed into the diaphragm. Connections shall have adequate strength to resist the connection force calculated in the Quick Check procedure of Section 4.5.3.7. (Commentary: Sec. A.5.1.1. Tier 2: Sec. 5.7.1.1)

WOOD LEDGERS: The connection between the wall panels and the diaphragm does not induce cross-grain bending or tension in the wood ledgers. (Commentary: Sec. A.5.1.2. Tier 2: Sec. 5.7.1.3)

TRANSFER TO SHEAR WALLS: Diaphragms are connected for transfer of seismic forces to the shear walls. (Commentary: Sec. A.5.2.1. Tier 2: Sec. 5.7.2)

GIRDER–COLUMN CONNECTION: There is a positive connection using plates, connection hardware, or straps between the girder and the column support. (Commentary: Sec. A.5.4.1. Tier 2: Sec. 5.7.4.1)

Foundation System DEEP FOUNDATIONS: Piles and piers are capable of transferring the lateral forces between the structure and the soil. (Commentary: Sec. A.6.2.3.)

SLOPING SITES: The difference in foundation embedment depth from one side of the building to another shall not exceed one story high. (Commentary: Sec. A.6.2.4)

Low, Moderate, and High Seismicity (Complete the Following Items in Addition to the Items for Very Low Seismicity)

Seismic-Force-Resisting System PROPORTIONS: The height-to-thickness ratio of the shear walls at each story is less than the following (Commentary: Sec. A.3.2.5.2. Tier 2: Sec. 5.5.3.1.2):

Top story of multi-story building	9
First story of multi-story building	15
All other conditions	13

MASONRY LAYUP: Filled collar joints of multi-wythe masonry walls have negligible voids. (Commentary: Sec. A.3.2.5.3. Tier 2: Sec. 5.5.3.4.1)

Diaphragms (Stiff or Flexible) OPENINGS AT SHEAR WALLS: Diaphragm openings immediately adjacent to the shear walls are less than 15% of the wall length. (Commentary: Sec. A.4.1.4. Tier 2: Sec. 5.6.1.3)

OPENINGS AT EXTERIOR MASONRY SHEAR WALLS: Diaphragm openings immediately adjacent to exterior masonry shear walls are be greater than 4 ft long. (Commentary: Sec. A.4.1.6. Tier 2: Sec. 5.6.1.3)

PLAN IRREGULARITIES: There is tensile capacity to develop the strength of the diaphragm at reentrant corners or other locations of plan irregularities. (Commentary: Sec. A.4.1.7. Tier 2: Sec. 5.6.1.4)

DIAPHRAGM REINFORCEMENT AT OPENINGS: There is reinforcing around all diaphragm openings larger than 50% of the building width in either major plan dimension. (Commentary: Sec. A.4.1.8. Tier 2: Sec. 5.6.1.5)

Flexible Diaphragms CROSS TIES: There are continuous cross ties between diaphragm chords. (Commentary: Sec. A.4.1.2. Tier 2: Sec. 5.6.1.2)

STRAIGHT SHEATHING: All straight sheathed diaphragms have aspect ratios less than 1-to-1 in the direction being considered. (Commentary: Sec. A.4.2.1. Tier 2: Sec. 5.6.2)

SPANS: All wood diaphragms with spans greater than 12 ft consist of wood structural panels or diagonal sheathing. (Commentary: Sec. A.4.2.2. Tier 2: Sec. 5.6.2)

DIAGONALLY SHEATHED AND UNBLOCKED DIAPHRAGMS: All diagonally sheathed or unblocked wood structural panel diaphragms have horizontal spans less than 30 ft and aspect ratios less than or equal to 3-to-1. (Commentary: Sec. A.4.2.3. Tier 2: Sec. 5.6.2)

NONCONCRETE FILLED DIAPHRAGMS: Untopped metal deck diaphragms or metal deck diaphragms with fill other than concrete shall consist of horizontal spans of less than 40 ft and have aspect ratios less than 4-to-1. (Commentary: Sec. A.4.3.1. and Tier 2: Sec. 5.6.3)

OTHER DIAPHRAGMS: The diaphragm does not consist of a system other than wood, metal deck, concrete, or horizontal bracing. (Commentary: Sec. A.4.7.1. Tier 2: Sec. 5.6.5)

Connections STIFFNESS OF WALL ANCHORS: Anchors of concrete or masonry walls to wood structural elements are installed taut and are stiff enough to limit the relative movement between the wall and the diaphragm to no greater than 1/8 in. before engagement of the anchors. (Commentary: Sec. A.5.1.4. Tier 2: Sec. 5.7.1.2)

BEAM, GIRDER, AND TRUSS SUPPORTS: Beams, girders, and trusses supported by unreinforced masonry walls or pilasters have independent secondary columns for support of vertical loads. (Commentary: Sec. A.5.4.5. Tier 2: Sec. 5.7.4.4)

16.17 NONSTRUCTURAL CHECKLIST

The following checklist shall be completed for combinations of Performance Levels and Level of Seismicity as required by Table 4-6. Checklist items are grouped by system or component type. Each item is preceded by an annotation indicating the Level(s) of Seismicity for which it is required, given a desired Performance Level. The Performance Level is designated by LS for Life Safety or PR for Position Retention. The Level of Seismicity is designated by L, M, or H, for Low, Moderate, and High, respectively. For example, the annotation "LS-H; PR-LMH" indicates that the checklist item is required in High Seismicity when the Performance Level is Life Safety and in Low, Moderate, or High Seismicity when the Performance Level is Position Retention.

Each of the required checklist items shall be marked Compliant (C), Noncompliant (NC), Not Applicable (N/A), or Unknown (U). Items marked Compliant indicate conditions that satisfy the corresponding performance objective, whereas items marked Noncompliant or Unknown indicate conditions that do not. Certain statements might not apply to the building being evaluated. For items marked Noncompliant or Unknown, the design professional may choose to conduct further investigation using the corresponding Tier 2 evaluation procedure; corresponding section numbers are in parentheses after each checklist item.

A checklist item shall be marked Compliant only when the following conditions are all true:

1. Supporting members relied on for compliance have complete load paths to supporting structural members.
2. Bracing members, connecting members, and supporting structural or architectural components relied on for compliance are of materials and dimensions suitable to the application.
3. Fasteners and connectors relied on for compliance are of materials and sizes suitable to the application.

For evaluation at the Life Safety Performance Level, a checklist item need not be marked Noncompliant if the noncompliance occurs only in locations where related damage would not cause severe injury or death to one or more people.

Tier 1 screening shall include on-site investigation and condition assessment as required by Section 4.2.1.

C16.17 NONSTRUCTURAL CHECKLIST

The section numbers in parentheses after each evaluation statement refer to the commentary in Appendix A regarding the statement's purpose and the corresponding Tier 2 evaluation procedures using Chapter 13. Refer to the commentary sections in Chapter 13 for additional commentary for the nonstructural components.

Life Safety Systems LS-LMH; PR-LMH. FIRE SUPPRESSION PIPING: Fire suppression piping is anchored and braced in accordance with NFPA-13. (Commentary: Sec. A.7.13.1. Tier 2: Sec. 13.7.4)

LS-LMH; PR-LMH. FLEXIBLE COUPLINGS: Fire suppression piping has flexible couplings in accordance with NFPA-13. (Commentary: Sec. A.7.13.2. Tier 2: Sec. 13.7.4)

LS-LMH; PR-LMH. EMERGENCY POWER: Equipment used to power or control life safety systems is anchored or braced. (Commentary: Sec. A.7.12.1. Tier 2: Sec. 13.7.7)

LS-LMH; PR-LMH. STAIR AND SMOKE DUCTS: Stair pressurization and smoke control ducts are braced and have flexible connections at seismic joints. (Commentary: Sec. A.7.14.1. Tier 2: Sec. 13.7.6)

LS-MH; PR-MH. SPRINKLER CEILING CLEARANCE: Penetrations through panelized ceilings for fire suppression devices provide clearances in accordance with NFPA-13. (Commentary: Sec. A.7.13.3. Tier 2: Sec. 13.7.4)

LS-not required; PR-LMH. EMERGENCY LIGHTING: Emergency and egress lighting equipment is anchored or braced. (Commentary: Sec. A.7.3.1. Tier 2: Sec. 13.7.9)

Hazardous Materials LS-LMH; PR-LMH. HAZARDOUS MATERIAL EQUIPMENT: Equipment mounted on vibration isolators and containing hazardous material is equipped with restraints or snubbers. (Commentary: Sec. A.7.12.2. Tier 2: 13.7.1)

LS-LMH; PR-LMH. HAZARDOUS MATERIAL STORAGE: Breakable containers that hold hazardous material, including gas cylinders, are restrained by latched doors, shelf lips, wires, or other methods. (Commentary: Sec. A.7.15.1. Tier 2: Sec. 13.8.4)

LS-MH; PR-MH. HAZARDOUS MATERIAL DISTRIBUTION: Piping or ductwork conveying hazardous materials is braced or otherwise protected from damage that would allow hazardous material release. (Commentary: Sec. A.7.13.4. Tier 2: Secs. 13.7.3 and 13.7.5)

LS-MH; PR-MH. SHUT-OFF VALVES: Piping containing hazardous material, including natural gas, has shut-off valves or other devices to limit spills or leaks. (Commentary: Sec. A.7.13.3. Tier 2: Secs. 13.7.3 and 13.7.5)

LS-LMH; PR-LMH. FLEXIBLE COUPLINGS: Hazardous material ductwork and piping, including natural gas piping, has flexible couplings. (Commentary: Sec. A.7.15.4, Tier 2: Secs.13.7.3 and 13.7.5)

LS-MH; PR-MH. PIPING OR DUCTS CROSSING SEISMIC JOINTS: Piping or ductwork carrying hazardous material that either crosses seismic joints or isolation planes or is connected to independent structures has couplings or other details to accommodate the relative seismic displacements. (Commentary: Sec. A.7.13.6. Tier 2: Secs.13.7.3, 13.7.5, and 13.7.6)

Partitions LS-LMH; PR-LMH. UNREINFORCED MASONRY: Unreinforced masonry or hollow-clay tile partitions are braced at a spacing of at most 10 ft in Low or Moderate Seismicity, or at most 6 ft in High Seismicity. (Commentary: Sec. A.7.1.1. Tier 2: Sec. 13.6.2)

LS-LMH; PR-LMH. HEAVY PARTITIONS SUPPORTED BY CEILINGS: The tops of masonry or hollow-clay tile partitions are not laterally supported by an integrated ceiling system. (Commentary: Sec. A.7.2.1. Tier 2: Sec. 13.6.2)

LS-MH; PR-MH. DRIFT: Rigid cementitious partitions are detailed to accommodate the following drift ratios: in steel moment frame, concrete moment frame, and wood frame buildings, 0.02; in other buildings, 0.005. (Commentary A.7.1.2. Tier 2: Sec. 13.6.2)

LS-not required; PR-MH. LIGHT PARTITIONS SUPPORTED BY CEILINGS: The tops of gypsum board partitions are not laterally supported by an integrated ceiling system. (Commentary: Sec. A.7.2.1. Tier 2: Sec. 13.6.2)

LS-not required; PR-MH. STRUCTURAL SEPARATIONS: Partitions that cross structural separations have seismic or control joints. (Commentary: Sec. A.7.1.3. Tier 2. Sec. 13.6.2)

LS-not required; PR-MH. TOPS: The tops of ceiling-high framed or panelized partitions have lateral bracing to the structure at a spacing equal to or less than 6 ft. (Commentary: Sec. A.7.1.4. Tier 2. Sec. 13.6.2)

Ceilings LS-MH; PR-LMH. SUSPENDED LATH AND PLASTER: Suspended lath and plaster ceilings have attachments that resist seismic forces for every 12 ft^2 of area. (Commentary: Sec. A.7.2.3. Tier 2: Sec. 13.6.4)

LS-MH; PR-LMH. SUSPENDED GYPSUM BOARD: Suspended gypsum board ceilings have attachments that resist seismic forces for every 12 ft^2 of area. (Commentary: Sec. A.7.2.3. Tier 2: Sec. 13.6.4)

LS-not required; PR-MH. INTEGRATED CEILINGS: Integrated suspended ceilings with continuous areas greater than 144 ft^2 and ceilings of smaller areas that are not surrounded by restraining partitions are laterally restrained at a spacing no greater than 12 ft with members attached to the structure above. Each restraint location has a minimum of four diagonal wires and compression struts, or diagonal members capable of resisting compression. (Commentary: Sec. A.7.2.2. Tier 2: Sec. 13.6.4)

LS-not required; PR-MH. EDGE CLEARANCE: The free edges of integrated suspended ceilings with continuous areas greater than 144 ft^2 have clearances from the enclosing wall or partition of at least the following: in Moderate Seismicity, 1/2 in.; in High Seismicity, 3/4 in. (Commentary: Sec. A.7.2.4. Tier 2: Sec. 13.6.4)

LS-not required; PR-MH. CONTINUITY ACROSS STRUCTURE JOINTS: The ceiling system does not cross any seismic joint and is not attached to multiple independent structures. (Commentary: Sec. A.7.2.5. Tier 2: Sec. 13.6.4)

LS-not required; PR-H. EDGE SUPPORT: The free edges of integrated suspended ceilings with continuous areas greater than 144 ft^2 are supported by closure angles or channels not less than 2 in. wide. (Commentary: Sec. A.7.2.6. Tier 2: Sec. 13.6.4)

LS-not required; PR-H. SEISMIC JOINTS: Acoustical tile or lay-in panel ceilings have seismic separation joints such that each continuous portion of the ceiling is no more than 2500 ft^2 and has a ratio of long-to-short dimension no more than 4-to-1. (Commentary: Sec. A.7.2.7. Tier 2: 13.6.4)

Light Fixtures LS-MH; PR-MH. INDEPENDENT SUPPORT: Light fixtures that weigh more per square foot than the ceiling they penetrate are supported independent of the grid ceiling suspension system by a minimum of two wires at diagonally opposite corners of each fixture. (Commentary: Sec. A.7.3.2. Tier 2: Secs. 13.6.4 and 13.7.9)

LS-not required; PR-H. PENDANT SUPPORTS: Light fixtures on pendant supports are attached at a spacing equal to or less than 6 ft and, if rigidly supported, are free to move with the structure to which they are attached without damaging adjoining components. (Commentary: A.7.3.3. Tier 2: Sec. 13.7.9)

LS-not required; PR-H. LENS COVERS: Lens covers on light fixtures are attached with safety devices. (Commentary: Sec. A.7.3.4. Tier 2: Sec. 13.7.9)

Cladding and Glazing LS-MH; PR-MH. CLADDING ANCHORS: Cladding components weighing more than 10 lb/ft^2 are mechanically anchored to the structure at a spacing equal to or less than the following: for Life Safety in Moderate Seismicity, 6 ft; for Life Safety in High Seismicity and for Position Retention in any seismicity, 4 ft. (Commentary: Sec. A.7.4.1. Tier 2: Sec. 13.6.1)

LS-MH; PR-MH. CLADDING ISOLATION: For steel or concrete moment frame buildings, panel connections are detailed to accommodate a story drift ratio of at least the following: for Life Safety in Moderate Seismicity, 0.01; for Life Safety in High Seismicity and for Position Retention in any seismicity, 0.02. (Commentary: Sec. A.7.4.3. Tier 2: Section 13.6.1)

LS-MH; PR-MH. MULTI-STORY PANELS: For multi-story panels attached at more than one floor level, panel connections are detailed to accommodate a story drift ratio of at least the following: for Life Safety in Moderate Seismicity, 0.01; for Life Safety in High Seismicity and for Position Retention in any seismicty, 0.02. (Commentary: Sec. A.7.4.4. Tier 2: Sec. 13.6.1)

LS-MH; PR-MH. PANEL CONNECTIONS: Cladding panels are anchored out of plane with a minimum number of connections for each wall panel, as follows: for Life Safety in Moderate Seismicity, 2 connections; for Life Safety in High Seismicity and for Position Retention in any seismicity, 4 connections. (Commentary: Sec. A.7.4.5. Tier 2: Sec. 13.6.1.4)

LS-MH; PR-MH. BEARING CONNECTIONS: Where bearing connections are used, there is a minimum of two bearing connections for each cladding panel. (Commentary: Sec. A.7.4.6. Tier 2: Sec. 13.6.1.4)

LS-MH; PR-MH. INSERTS: Where concrete cladding components use inserts, the inserts have positive anchorage or are anchored to reinforcing steel. (Commentary: Sec. A.7.4.7. Tier 2: Sec. 13.6.1.4)

LS-MH; PR-MH. OVERHEAD GLAZING: Glazing panes of any size in curtain walls and individual interior or exterior panes more than 16 ft^2 in area are laminated annealed or laminated heat-strengthened glass and are detailed to remain in the frame when cracked. (Commentary: Sec. A.7.4.8: Tier 2: Sec. 13.6.1.5)

Masonry Veneer LS-LMH; PR-LMH. TIES: Masonry veneer is connected to the backup with corrosion-resistant ties. There is a minimum of one tie for every 2-2/3 ft^2, and the ties have spacing no greater than the following: for Life Safety in Low or Moderate Seismicity, 36 in.; for Life Safety in High Seismicity and for Position Retention in any seismicity, 24 in. (Commentary: Sec. A.7.5.1. Tier 2: Sec. 13.6.1.2)

LS-LMH; PR-LMH. SHELF ANGLES: Masonry veneer is supported by shelf angles or other elements at each floor above the ground floor. (Commentary: Sec. A.7.5.2. Tier 2: Sec. 13.6.1.2)

LS-LMH; PR-LMH. WEAKENED PLANES: Masonry veneer is anchored to the backup adjacent to weakened planes, such as at the locations of flashing. (Commentary: Sec. A.7.5.3. Tier 2: Sec. 13.6.1.2)

LS-LMH; PR-LMH. UNREINFORCED MASONRY BACKUP: There is no unreinforced masonry backup. (Commentary: Sec. A.7.7.2. Tier 2: Sections 13.6.1.1 and 13.6.1.2)

LS-MH; PR-MH. STUD TRACKS: For veneer with metal stud backup, stud tracks are fastened to the structure at a spacing equal to or less than 24 in. on center. (Commentary: Sec. A.7.6.1. Tier 2: Sections 13.6.1.1 and 13.6.1.2)

LS-MH; PR-MH. ANCHORAGE: For veneer with concrete block or masonry backup, the backup is positively anchored to the structure at a horizontal spacing equal to or less than 4 ft along the floors and roof. (Commentary: Sec. A.7.7.1. Tier 2: Sections 13.6.1.1 and 13.6.1.2)

LS-not required; PR-MH. WEEP HOLES: In veneer anchored to stud walls, the veneer has functioning weep holes and base flashing. (Commentary: Sec. A.7.5.6. Tier 2: Section 13.6.1.2)

LS-not required; PR-MH. OPENINGS: For veneer with metal stud backup, steel studs frame window and door openings. (Commentary: Sec. A.7.6.2. Tier 2: Secs. 13.6.1.1 and 13.6.1.2)

Parapets, Cornices, Ornamentation, and Appendages LS-LMH; PR-LMH. URM PARAPETS OR CORNICES: Laterally unsupported unreinforced masonry parapets or cornices have height-to-thickness ratios no greater than the following: for Life Safety in Low or Moderate Seismicity, 2.5; for Life Safety in High Seismicity and for Position Retention in any seismicity, 1.5. (Commentary: Sec. A.7.8.1. Tier 2: Sec. 13.6.5)

LS-LMH; PR-LMH. CANOPIES: Canopies at building exits are anchored to the structure at a spacing no greater than the following: for Life Safety in Low or Moderate Seismicity, 10 ft; for Life Safety in High Seismicity and for Position Retention in any seismicity, 6 ft. (Commentary: Sec. A.7.8.2. Tier 2: Sec. 13.6.6)

LS-MH; PR-LMH. CONCRETE PARAPETS: Concrete parapets with height-to-thickness ratios greater than 2.5 have vertical reinforcement. (Commentary: Sec. A.7.8.3. Tier 2: Sec. 13.6.5)

LS-MH; PR-LMH. APPENDAGES: Cornices, parapets, signs, and other ornamentation or appendages that extend above the highest point of anchorage to the structure or cantilever from components are reinforced and anchored to the structural system at a spacing equal to or less than 6 ft. This checklist item does not apply to parapets or cornices covered by other checklist items. (Commentary: Sec. A.7.8.4. Tier 2: Sec. 13.6.6)

Masonry Chimneys LS-LMH; PR-LMH. URM CHIMNEYS: Unreinforced masonry chimneys extend above the roof surface no more than the following: for Life Safety in Low or Moderate Seismicity, 3 times the least dimension of the chimney; for Life Safety in High Seismicity and for Position Retention in any seismicity, 2 times the least dimension of the chimney. (Commentary: Sec. A.7.9.1. Tier 2: 13.6.7)

LS-LMH; PR-LMH. ANCHORAGE: Masonry chimneys are anchored at each floor level, at the topmost ceiling level, and at the roof. (Commentary: Sec. A.7.9.2. Tier 2: 13.6.7)

Stairs LS-LMH; PR-LMH. STAIR ENCLOSURES: Hollow-clay tile or unreinforced masonry walls around stair enclosures are restrained out of plane and have height-to-thickness ratios not greater than the following: for Life Safety in Low or Moderate Seismicity, 15-to-1; for Life Safety in High Seismicity and for Position Retention in any seismicity, 12-to-1. (Commentary: Sec. A.7.10.1. Tier 2: Sec. 13.6.2 and 13.6.8)

LS-LMH; PR-LMH. STAIR DETAILS: In moment frame structures, the connection between the stairs and the structure does not rely on shallow anchors in concrete. Alternatively, the stair details are capable of accommodating the drift calculated using the Quick Check procedure of Section 4.5.3.1 without including any lateral stiffness contribution from the stairs. (Commentary: Sec. A.7.10.2. Tier 2: 13.6.8)

Contents and Furnishings LS-MH; PR-MH. INDUSTRIAL STORAGE RACKS: Industrial storage racks or pallet racks more than 12 ft high meet the requirements of ANSI/RMI MH 16.1 as modified by ASCE 7 Chapter 15. (Commentary: Sec. A.7.11.1. Tier 2: Sec. 13.8.1)

LS-H; PR-MH. TALL NARROW CONTENTS: Contents more than 6 ft high with a height-to-depth or height-to-width ratio greater than 3-to-1 are anchored to the structure or to each other. (Commentary: Sec. A.7.11.2. Tier 2: Sec. 13.8.2)

LS-H; PR-H. FALL-PRONE CONTENTS: Equipment, stored items, or other contents weighing more than 20 lb whose center of mass is more than 4 ft above the adjacent floor level are braced or otherwise restrained. (Commentary: Sec. A.7.11.3. Tier 2: Sec. 13.8.2)

LS-not required; PR-MH. ACCESS FLOORS: Access floors more than 9 in. high are braced. (Commentary: Sec. A.7.11.4. Tier 2: Sec. 13.8.3)

LS-not required; PR-MH. EQUIPMENT ON ACCESS FLOORS: Equipment and other contents supported by access floor systems are anchored or braced to the structure independent of the access floor. (Commentary: Sec. A.7.11.5. Tier 2: Sec. 13.7.7 and 13.8.3)

LS-not required; PR-H. SUSPENDED CONTENTS: Items suspended without lateral bracing are free to swing from or move with the structure from which they are suspended without damaging themselves or adjoining components. (Commentary. Sec. A.7.11.6. Tier 2: Sec. 13.8.2)

Mechanical and Electrical Equipment LS-H; PR-H. FALL-PRONE EQUIPMENT: Equipment weighing more than 20 lb whose center of mass is more than 4 ft above the adjacent floor level, and which is not in-line equipment, is braced. (Commentary: Sec. A.7.12.4. Tier 2: Secs. 13.7.1 and 13.7.7)

LS-H; PR-H. IN-LINE EQUIPMENT: Equipment installed in-line with a duct or piping system, with an operating weight more than 75 lb, is supported and laterally braced independent of the duct or piping system. (Commentary: Sec. A.7.12.5. Tier 2: Sec. 13.7.1)

LS-H; PR-MH. TALL NARROW EQUIPMENT: Equipment more than 6 ft high with a height-to-depth or height-to-width ratio greater than 3-to-1 is anchored to the floor slab or adjacent structural walls. (Commentary: Sec. A.7.12.6. Tier 2: Sec. 13.7.1 and 13.7.7)

LS-not required; PR-MH. MECHANICAL DOORS: Mechanically operated doors are detailed to operate at a story drift ratio of 0.01. (Commentary: Sec. A.7.12.7. Tier 2: Sec. 13.6.9)

LS-not required; PR-H. SUSPENDED EQUIPMENT: Equipment suspended without lateral bracing is free to swing from or move with the structure from which it is suspended without damaging itself or adjoining components. (Commentary: Sec. A.7.12.8. Tier 2: Secs. 13.7.1 and 13.7.7)

LS-not required; PR-H. VIBRATION ISOLATORS: Equipment mounted on vibration isolators is equipped with horizontal restraints or snubbers and with vertical restraints to resist overturning. (Commentary: Sec. A.7.12.9. Tier 2: Sec. 13.7.1)

LS-not required; PR-H. HEAVY EQUIPMENT: Floor-supported or platform-supported equipment weighing more than 400lb is anchored to the structure. (Commentary: Sec. A.7.12.10. Tier 2: Secs. 13.7.1 and 13.7.7)

LS-not required; PR-H. ELECTRICAL EQUIPMENT: Electrical equipment is laterally braced to the structure. (Commentary: Sec. A.7.12.11. Tier 2: Sec. 13.7.7)

LS-not required; PR-H. CONDUIT COUPLINGS: Conduit greater than 2.5 in. trade size that is attached to panels, cabinets, or other equipment and is subject to relative seismic displacement has flexible couplings or connections. (Commentary: Sec. A.7.12.12. Tier 2: Sec. 13.7.8)

Piping LS-not required; PR-H. FLEXIBLE COUPLINGS: Fluid and gas piping has flexible couplings. (Commentary: Sec. A.7.13.2. Tier 2: Secs. 13.7.3 and 13.7.5)

LS-not required; PR-H. FLUID AND GAS PIPING: Fluid and gas piping is anchored and braced to the structure to limit spills or leaks. (Commentary: Sec. A.7.13.4. Tier 2: Secs. 13.7.3 and 13.7.5)

LS-not required; PR-H. C-CLAMPS: One-sided C-clamps that support piping larger than 2.5 in. in diameter are restrained. (Commentary: Sec. A.7.13.5. Tier 2: Secs. 13.7.3 and 13.7.5)

LS-not required; PR-H. PIPING CROSSING SEISMIC JOINTS: Piping that crosses seismic joints or isolation planes or is connected to independent structures has couplings or other details to accommodate the relative seismic displacements. (Commentary: Sec. A7.13.6. Tier 2: Sec.13.7.3 and Sec. 13.7.5)

Ducts LS-not required; PR-H. DUCT BRACING: Rectangular ductwork larger than 6 ft^2 in cross-sectional area and round ducts larger than 28 in. in diameter are braced. The maximum spacing of transverse bracing does not exceed 30 ft. The maximum spacing of longitudinal bracing does not exceed 60 ft. (Commentary: Sec. A.7.14.2. Tier 2: Sec. 13.7.6)

LS-not required; PR-H. DUCT SUPPORT: Ducts are not supported by piping or electrical conduit. (Commentary: Sec. A.7.14.3. Tier 2: Sec. 13.7.6)

LS-not required; PR-H. DUCTS CROSSING SEISMIC JOINTS: Ducts that cross seismic joints or isolation planes or are connected to independent structures have couplings or other details to accommodate the relative seismic displacements. (Commentary: Sec. A.7.14.5. Tier 2: Sec. 13.7.6)

Elevators LS-H; PR-H. RETAINER GUARDS: Sheaves and drums have cable retainer guards. (Commentary: Sec. A.7.16.1. Tier 2: Sec. 13.8.6)

LS-H; PR-H. RETAINER PLATE: A retainer plate is present at the top and bottom of both car and counterweight. (Commentary: Sec. A.7.16.2. Tier 2: Sec. 13.8.6)

LS-not required; PR-H. ELEVATOR EQUIPMENT: Equipment, piping, and other components that are part of the elevator system are anchored. (Commentary: Sec. A.7.16.3. Tier 2: Sec. 13.8.6)

LS-not required; PR-H. SEISMIC SWITCH: Elevators capable of operating at speeds of 150 ft/min or faster are equipped with seismic switches that meet the requirements of ASME A17.1 or have trigger levels set to 20% of the acceleration of gravity at the base of the structure and 50% of the acceleration of gravity in other locations. (Commentary: Sec. A.7.16.4. Tier 2: Sec. 13.8.6)

LS-not required; PR-H. SHAFT WALLS: Elevator shaft walls are anchored and reinforced to prevent toppling into the shaft during strong shaking. (Commentary: Sec. A.7.16.5. Tier 2: Sec. 13.8.6)

LS-not required; PR-H. COUNTERWEIGHT RAILS: All counterweight rails and divider beams are sized in accordance with ASME A17.1. (Commentary: Sec. A.7.16.6. Tier 2: Sec. 13.8.6)

LS-not required; PR-H. BRACKETS: The brackets that tie the car rails and the counterweight rail to the structure are sized in accordance with ASME A17.1. (Commentary: Sec. A.7.16.7. Tier 2: Sec. 13.8.6)

LS-not required; PR-H. SPREADER BRACKET: Spreader brackets are not used to resist seismic forces. (Commentary: Sec. A.7.16.8. Tier 2: Sec. 13.8.6)

LS-not required; PR-H. GO-SLOW ELEVATORS: The building has a go-slow elevator system. (Commentary: Sec. A.7.16.9. Tier 2: Sec. 13.8.6)

This page intentionally left blank

CHAPTER 17
REFERENCE DOCUMENTS

17.1 CONSENSUS STANDARDS AND OTHER REFERENCE DOCUMENTS

This section contains all references cited within the body of the standard.

American Architectural Manufacturers Association (AAMA). (2009). *AAMA 501.6, Recommended Dynamic Test Method for Determining the Seismic Drift Causing Glass Fallout from a Wall System*. Schaumburg, IL.

American Concrete Institute (ACI). (2010). "Guide for obtaining cores and interpreting compressive strength results." *ACI 214.4R-10*, Farmington Hills, MI.

American Concrete Institute (ACI). (2011). "Building code requirements for structural concrete and commentary." *ACI 318*, Farmington Hills, MI.

American Institute of Steel Construction (AISC). (2010a). "Seismic provisions for structural steel buildings." *AISC 341*, Chicago.

American Institute of Steel Construction (AISC). (2010b). "Specification for structural steel buildings (LRFD)." *AISC 360*, Chicago.

American Iron and Steel Institute (AISI). (2009). "North American standard for cold-formed steel framing—Lateral design, 2007 edition with supplement 1." *AISI S213-07/S1-09*, Washington, DC.

American Iron and Steel Institute (AISI). (2010). "North American specification for the design of cold-formed steel structural members, 2007 edition with supplement 2." *AISI S100-07/S2-10*, Washington, DC.

American National Standards Institute (ANSI). (2009). "Manually operated gas valves for appliances, appliance connector valves, and hose end valves." *ANSI Z21.15*, Washington, DC.

American Society of Civil Engineers (ASCE). (2010). "Minimum design loads for buildings and other structures." *ASCE/SEI 7-10*, Reston, VA.

American Society of Mechanical Engineers (ASME). (2000). "Code for pressure piping." *ASME B31*, New York.

American Society for Testing and Materials (ASTM). (1999). "Standard test method for penetration test and split-barrel sampling of soils." *ASTM D1586-99*, West Conshohocken, PA.

American Society for Testing and Materials (ASTM). (2000a). "Standard specification for fusion-bonded epoxy-coated pipe piles." *ASTM A972/A972M-00*, West Conshohocken, PA.

American Society for Testing and Materials (ASTM). (2001a). "Standard specification for high-strength low-alloy steel shapes of structural quality, produced by quenching and self-tempering process (QST)." *ASTM A913/A913M-01*, West Conshohocken, PA.

American Society for Testing and Materials (ASTM). (2001b). "Standard test method for compressive strength of cylindrical concrete specimens." *ASTM C39/C39M-01*, West Conshohocken, PA.

American Society for Testing and Materials (ASTM). (2002a). "Standard specification for carbon steel bolts and studs, 60,000 psi tensile strength." *ASTM A307-02*, West Conshohocken, PA.

American Society for Testing and Materials (ASTM). (2002b). "Standard specification for steel strand, uncoated seven-wire for prestressed concrete." *ASTM A416/A416M-02*, West Conshohocken, PA.

American Society for Testing and Materials (ASTM). (2002c). "Standard specification for uncoated stress-relieved steel wire for prestressed concrete." *ASTM A421/A421M-02*, West Conshohocken, PA.

American Society for Testing and Materials (ASTM). (2003a). "Standard specification for high-strength low-alloy structural steel" *ASTM A242/A242M-03*, West Conshohocken, PA.

American Society for Testing and Materials (ASTM). (2003b). "Standard test methods and definitions for mechanical testing of steel products." *ASTM A370-03*, West Conshohocken, PA.

American Society for Testing and Materials (ASTM). (2003c). "Standard specification for deformed and plain billet-steel bars for concrete reinforcement." *ASTM A615/A615M-03A*, West Conshohocken, PA.

American Society for Testing and Materials (ASTM). (2003d). "Standard specification for uncoated high-strength steel bar for prestressing concrete." *ASTM A722/A722M-98*, West Conshohocken, PA.

American Society for Testing and Materials (ASTM). (2003e). "Standard test method for obtaining and testing drilled cores and sawed beams of concrete." *ASTM C42/C42M-03*, West Conshohocken, PA.

American Society for Testing and Materials (ASTM). (2003f). "Standard test method for in situ compressive stress within solid unit masonry estimated using flatjack measurements." *ASTM C1196-03*, West Conshohocken, PA.

American Society for Testing and Materials (ASTM). (2003g). "Standard test methods for strength of anchors in concrete and masonry element." *ASTM E488-96*, West Conshohocken, PA.

American Society for Testing and Materials (ASTM). (2004a). "Standard specification for carbon structural steel." *ASTM A36/A36M-04*, West Conshohocken, PA.

American Society for Testing and Materials (ASTM). (2004b). "Standard specification for high-strength low-alloy columbium-vanadium structural steel." *ASTM A572/A572M-04* (formerly *A441/A441M*), West Conshohocken, PA.

American Society for Testing and Materials (ASTM). (2004c). "Standard specification for structural steel shapes." *ASTM A992/A992M-04*, West Conshohocken, PA.

American Society for Testing and Materials (ASTM). (2006a). "Standard methods for establishing structural grades and related allowable properties for visually graded lumber." *ASTM D245-06*, West Conshohocken, PA.

American Society for Testing and Materials (ASTM). (2006b). "Standard test methods for conducting creep, creep-rupture, and stress-rupture tests of metallic materials." *ASTM E139-06*, West Conshohocken, PA.

American Society for Testing and Materials (ASTM). (2008). "Standard practice for dealing with outlying observation." *ASTM E178*. West Conshohocken, Pennsylvania.

American Society for Testing and Materials (ASTM). (2009). "Standard specification for low-alloy steel deformed and plain bars for concrete reinforcement." *ASTM A706*, West Conshohocken, PA.

American Society for Testing and Materials (ASTM). (2009a). "Standard test method for in situ compressive stress within solid unit masonry estimated using flatjack measurements." *ASTM C1196-09*, West Conshohocken, PA.

American Society for Testing and Materials (ASTM). (2009b). "Standard test method for in situ measurement of masonry deformability properties using flatjack method." *ASTM C1197-09*, West Conshohocken, PA.

American Society for Testing and Materials (ASTM). (2009c). "Standard test methods for in situ measurement of masonry mortar joint shear strength index." *ASTM C1531-09*, West Conshohocken, PA.

American Society for Testing and Materials (ASTM). (2010a). "Standard test method for measurement of masonry flexural bond strength." *ASTM C1072-10*, West Conshohocken, PA.

American Society for Testing and Materials (ASTM). (2010b). "Standard specification for computing the reference resistance of wood-based materials and structural connections for load and resistance factor design." *ASTM D5457-10*, West Conshohocken, PA.

American Society for Testing and Materials (ASTM). (2010c). "Standard test measures for flexural bond strength of masonry." *ASTM E518-10*, West Conshohocken, PA.

American Society for Testing and Materials (ASTM). (2010d). "Standard test method for diagonal tension (shear) in masonry assemblages." *ASTM E519/E519M-10*, West Conshohocken, PA.

American Society for Testing and Materials (ASTM). (2011). "Standard test method for splitting tensile strength of cylindrical concrete specimens." *ASTM C496-11*, West Conshohocken, PA.
American Society for Testing and Materials (ASTM). *ASTM A360*.
American Water Works Association (AWWA). (1996). *AWWA D100 -96*.
American Welding Society (AWS). (1998). "Structural welding code—Sheet steel." *AWS D1.3*, Miami.
American Welding Society (AWS). (2002). "Structural welding code—Steel." *AWS D1.1*, Miami.
American Wood Council (AWC). (2012). *National design specification for wood construction. ANSI/AWC NDS-2012*, American Wood Council. Washington, DC.
American Wood Council (AWC). (2008). *Special design provisions for wind and seismic standard with commentary. ANSI/AWC SDPWS-2008*, American Wood Council. Washington, DC.
ASTM E178-08, 2008, *Standard Practice for Dealing With Outlying Observations*, American Society for Testing and Materials, West Conshohocken, Pennsylvania.
BOCA. (1993). National Building Code, Building Officials and Code Administrators International, Country Club Hills IL.
Brick Industry Association (BIA). (2005). "Technical notes on brick construction TN46." "Maintenance of brick masonry." Brick Industry Association.
FEMA 368. (2001). NEHRP recommended provisions for seismic regulations for new buildings and other structures, 2000 Edition, Part 1: Provisions, prepared by the Building Seismic Safety Council for the Federal Emergency Management Agency, Washington, D.C.
FEMA 369. (2001). NEHRP recommended provisions for seismic regulations for new buildings and other structures, 2000 Edition, Part 2: Commentary, prepared by the Building Seismic Safety Council for the Federal Emergency Management Agency, Washington, D.C.
IBC. (2000). *International building code*, International Code Council, Falls Church, Virginia.
IBC. (2006). *International building code*, International Code Council, Falls Church, Virginia.
International Code Council Evaluation Services (ICC-ES). (2011). "Acceptance criteria for anchors in unreinforced masonry elements." *ES AC-60*, Whittier, CA.
International Code Council (ICC). (2012a), *International building code*, International Code Council, Whittier, CA.
International Code Council (ICC). (2012b). *International existing building code*, Whittier, CA.
International Conference of Building Officials (ICBO). (1997). "Uniform building code." *UBC*, Whittier, CA.
IEBC. (2003). *International existing building code*, International Code Council, Falls Church, Virginia.
Masonry Standards Joint Committee of the Masonry Society. (2011). *TMS 402-11/ACI 530-11/ASCE 5-11 Building code requirements for masonry structures*. The Masonry Society, Boulder, CO.
Masonry Standards Joint Committee of the Masonry Society. (2011). *TMS 602-11/ACI 530.1-11/ASCE 6-11 Specification for masonry structures*. The Masonry Society, Boulder, CO.
National Fire Protection Association (NFPA). (2013). "Standard for the installation of sprinkler systems." *NFPA 13*, Quincy, MA.
National Institute of Standards and Technology (NIST). (1992). "Performance standard for wood-based structural use panels." *U.S. Product Standard PS 2-92*, Washington, DC.
National Institute of Standards and Technology (NIST). (1995). "Construction and industrial plywood with typical APA trademarks." *U.S. Product Standard PS 1*-95, Washington, DC.
SBCC. (1994). *Standard building code*, Southern Building Code Congress International, Birmingham, Alabama.
Sheet Metal and Air Conditioning Contractors National Association (SMACNA). (2008). *Seismic restraint manual: guidelines for mechanical systems, 3rd edition, ANSI/SMACNA 001-2008*. Chantilly, VA.
UBC. (1976). *Uniform building code*, International Conference of Building Officials, Whittier, California.
UBC. (1985). *Uniform building code*, International Conference of Building Officials, Whittier, California.
UBC. (1991). *Uniform building code*, International Conference of Building Officials, Whittier, California.
UBC. (1994). *Uniform building code*, International Conference of Building Officials, Whittier, California.
UBC. (1997). *Uniform building code*, International Conference of Building Officials, Whittier, California.

C17.1 COMMENTARY REFERENCES

This section contains all references cited within the commentary to the standard.

Abrams, D. P., and Shah, N. (1992). "Cyclic load testing of unreinforced masonry walls," Advanced Construction Technology Center Report #92-26-10, December.
Agbabian, M., Barnes, S., and Kariotis, J. (ABK). (1981). *Topical report 03, Methodology for mitigation of seismic hazards in existing unreinforced masonry buildings: diaphragm testing*. Washington, D.C.: National Science Foundation.
Agbabian, M., Barnes, S., and Kariotis, J. (ABK). (1984). *Topical report 08, methodology for mitigation of seismic hazards in existing unreinforced masonry buildings: The methodology*. Washington, D.C.: National Science Foundation.
Al Chaar, G. (2002). "Evaluating strength and stiffness of unreinforced masonry infill structures." Construction Engineering Research Laboratory RDC/CERL TR-02-1. U.S. Army Corps of Engineers.
Al-Chaar, G., Lamb, G. E., and Abrams, D. P. (2003). Effects of openings on structural performance of unreinforced masonry infilled frames, *Proceedings, Ninth North American Masonry Conference*, Clemson University.
Al-Hussaini, T., Zayas, V., and Constantinou, M. C. (1994). "Seismic isolation of multi-story frame structures using spherical sliding isolation systems." *Rep. No. NCEER-94-0007*, National Center for Earthquake Engineering Research, State Univ. of New York at Buffalo, NY.
Allen, F., and Darvall, P. (1977). "Lateral load equivalent frame." *ACI J.*, 74(7), 294–299.
American Architectural Manufacturers Association (AAMA). (2009). *AAMA 501.4, Recommended static test method for evaluating curtain wall and storefront systems subjected to seismic and wind-induced interstory drift*. Schaumberg, IL.
American Association of State Highway and Transportation Officials (AASHTO). (1999). *Guide specifications for seismic isolation design*, Washington, DC.
American Association of State Highway and Transportation Officials (AASHTO). (2010). *Guide specifications for seismic isolation design*, Washington, DC.
American Association of State Highway and Transportation Officials (AASHTO). (2012). *AASHTO LRFD bridge design specifications*, Washington, DC.
American Concrete Institute (ACI). (2001). "Acceptance criteria for moment frames based on structural testing." *ACI T1.1-01*, Detroit.
American Concrete Institute (ACI). (2003a). "In-place methods to estimate concrete strength." *ACI 228.1R-03*, Farmington Hills, MI.
American Concrete Institute (ACI). (2003b). "Recommendations for design of beam-column connections in monolithic reinforced concrete structures." *ACI 352R-03*, Farmington Hills, MI.
American Concrete Institute (ACI). (2003c). "Strength evaluation of existing concrete buildings." *ACI 437R-03*, Farmington Hills, MI.
American Concrete Institute (ACI). (2005). "Acceptance criteria for moment frames based on structural testing and commentary." *ACI 374.1-05*, Farmington Hills, MI
American Concrete Institute (ACI). (2007a). "Guide for evaluation of concrete structures before rehabilitation." *ACI 364.1R-07*, Farmington Hills, MI.
American Concrete Institute (ACI). (2007b). "Qualification of post-installed mechanical anchors in concrete." *ACI 355.2-07*, Farmington Hills, MI.
American Concrete Institute (ACI). (2008). "Guide for conducting a visual inspection of concrete in service." *ACI 201.1R-08*, Farmington Hills, MI.
American Concrete Institute (ACI). (2011b). "Qualification of post-installed adhesive anchors in concrete." *ACI 355.4-11*, Farmington Hills, MI.
American Concrete Institute (ACI). (2011c). "Guide for seismic rehabilitation of existing concrete structures." *ACI 369R-11*, Farmington Hills, MI.
American Forest & Paper Association (AF&PA). (1996). "LRFD manual for engineered wood construction, including supplements and guidelines." *AF&PA LRFD*, Washington, DC.
American Institute of Steel Construction (AISC). (1983). "Iron and steel beams 1873–1952." Chicago.
American Institute of Steel Construction (AISC). (1998). *Manual of steel construction, load and resistance factor design (LRFD)*, 2nd Ed., Chicago.
American Institute of Steel Construction (AISC). (2010). *Steel Construction Manual*, 13th Ed., Chicago.
American Institute of Steel Construction (AISC)/Structural Engineers Association of California (SEAOC). (2001). "Recommended provisions

for BRB." Seismology and Structural Standards Committee of the Structural Engineers Association of California and American Institute of Steel Construction, Chicago.
American Petroleum Institute (API). (1998). *Welded steel tanks for oil storage*, 10th Ed., *API 650*, Washington, DC.
American Plywood Association (APA). (1995). "Design capacities of APA performance rated structural-use panels." *Technical Note N375B*, Tacoma, WA.
American Plywood Association (APA). (1997). *Plywood design specification*, Tacoma, WA.
American Plywood Association (APA). (2001). "Diaphragms and shear walls design/construction guide." *APA Form L350*, Tacoma, WA.
American Plywood Association (APA). (2008). *Panel design specification*, Tacoma, WA.
American Society of Civil Engineers (ASCE). (1999). "Earthquake-actuated automatic gas shutoff devices." *ASCE 25-97*, Reston, VA.
American Society of Civil Engineers (ASCE). (2000a). "Guideline for structural condition assessment of existing buildings." *ASCE/SEI 11-99*, Reston, VA.
American Society of Civil Engineers (ASCE). (2000b). "Seismic analysis of safety-related nuclear structures and commentary on standard for seismic analysis of safety-related nuclear structures." *ASCE 4-98*, New York.
American Society of Civil Engineers (ASCE). (2003). "Seismic evaluation of existing buildings." *ASCE/SEI 31-03*, Reston, VA.
American Society of Civil Engineers (ASCE). (2007). "Seismic rehabilitation of existing buildings." *ASCE/SEI 41-06*, Reston, VA.
American Society of Heating, Refrigeration, and Air Conditioning Engineers (ASHRAE). (1995). "Applications manual, chapter 50." Atlanta.
American Society of Heating, Refrigeration, and Air Conditioning Engineers (ASHRAE). (1999). "A practical guide to seismic restraint." *ASHRAE RP-812*, Atlanta.
American Society of Mechanical Engineers (ASME). (2000c). "Safety code for elevators and escalators." *ASME A17.1*, New York.
American Society of Mechanical Engineers (ASME). (2000d). "Gas transmission and distribution piping systems." *ASME B31.8*, New York.
American Society of Mechanical Engineers (ASME). (2000e). "Building services piping." *ASME B31.9*, New York.
American Society of Mechanical Engineers (ASME). (2001a). "Power piping." *ASME B31.1*, New York.
American Society of Mechanical Engineers (ASME). (2001b). "Refrigeration plant." *ASME B31.5*, New York.
American Society of Mechanical Engineers (ASME). (2002a). "Process piping." *ASME B31.3*, New York.
American Society of Mechanical Engineers (ASME). (2002b). "Liquid transportation systems for hydrocarbons, liquid petroleum gas, anhydrous ammonia, and alcohols." *ASME B31.4*, New York.
American Society of Mechanical Engineers (ASME). (2002c). "Slurry transportation systems." *ASME B31.11*, New York.
American Society for Testing and Materials (ASTM). (2002d). "Standard test method for pulse velocity through concrete." *ASTM C597-02*, West Conshohocken, PA.
American Society for Testing and Materials (ASTM). (2002e). "Standard test method for diagonal tension (shear) in masonry assemblages." *ASTM E519-02*, West Conshohocken, PA.
American Society of Mechanical Engineers (ASME). (2012). "Manually operated metallic gas valves for use in gas piping systems up to 175 psi." *ASME B16.33*, New York.
American Society for Testing and Materials (ASTM). "Standard guide for seismic risk assessment of buildings." *ASTM E2026*, West Conshohocken, PA.
American Society for Testing and Materials (ASTM). "Standard practice for probable maximum loss (PML) evaluations for earthquake due-diligence assessments." *ASTM E2557*, West Conshohocken, PA.
American Society for Testing and Materials (ASTM). *ASTM A53*.
American Society for Testing and Materials (ASTM). *ASTM A500*.
American Society for Testing and Materials (ASTM). (1955). "Recommended practice for conducting long-time high-temperature tension test of metallic materials" *ASTM E22-41*, West Conshohocken, PA.
Anderson, D. G., Martin, G. R., Lam, I., and Wang, J. N. (2008). *Seismic Analysis and Design of Retaining Walls, Buried Structures, Slopes and Embankments*, (Publication Number NCHRP-611), National Cooperative Highway Research Program, Transportation Research Board, Washington, D.C
Angel, R., Abrams, D. P., Shapiro, D., Uzarski, J., and Webster, M. (1994). "Behavior of reinforced concrete frames with masonry infills," Structural Research Series No. 589, University of Illinois at Urbana-Champaign, March.
Anthoine, A., Magonette, G., and Magenes, G. (1995). "Shear compression testing and analysis of brick masonry walls." *10th European Conference on Earthquake Engineering*. 1657–1662.
Applied Technology Council (ATC). (1978). "Tentative provisions for the development of seismic regulations for buildings." *ATC-3-06*, Redwood City, CA.
Applied Technology Council (ATC). (1981). "Guidelines for the design of horizontal wood diaphragms." *ATC-7*, Redwood City, CA.
Applied Technology Council (ATC). (1987). "Evaluating the seismic resistance of existing buildings." *ATC-14*, Redwood City, CA.
Applied Technology Council (ATC). (1992). "Guidelines for seismic testing of components of steel structures." *ATC-24*, Redwood City, CA.
Applied Technology Council (ATC). (1993). "Proc. of the Workshop to Resolve Seismic Rehabilitation Subissues—July 29 and 30, 1993; Development of guidelines for seismic rehabilitation of buildings, phase I: Issues identification and resolution." *ATC-282*, Redwood City, CA.
Applied Technology Council (ATC). (1996). "Seismic evaluation and retrofit of concrete buildings." Prepared by the Applied Technology Council (*Rep. No. ATC-40*), Redwood City, CA, for the California Seismic Safety Commission (*Rep. No. SSC 96-01*).
Applied Technology Council (ATC). (2012). "Soil-structure interaction for building structures." *NIST GCR 12-917-21*, prepared by the Applied Technology Council (*Rep. ATC-83*) and the Consortium of Universities for Research in Earthquake Engineering for the National Institute of Standards and Technology, Gaithersburg, MD.
Atkinson, R. H., Amadei, B. P., Saeb, S., and Sture, S. (1989). "Response of masonry bed joints in direct shear," *Journal of Structural Engineering*, ASCE, 115(9), 2,276–2,296.
Aviram, A., Stojadinovic, B., and Der Kiureghian, A. (2010). "Performance and reliability of exposed column base plate connections for steel moment-resisting frames." *Rep. No. PEER 107*, Pacific Earthquake Engineering Research Center, Univ. of California, Berkeley, CA.
Bardet, J-P., Tobita, T., Mace, N., and Hu, J. (2002). Regional modeling of liquefaction-induced ground deformation. Earthquake spectra: February 2002, Vol. 18, No. 1, pp. 19–46.
Bartlett, S. F., and Youd, T. L. (1992). "Empirical prediction of lateral spread displacement." M. Hamada and T. D. O'Rourke, eds., *Proc. of the Fourth Japan–U.S. Workshop on Earthquake Resistant Design of Lifeline Facilities and Countermeasures for Soil Liquefaction, Rep. No. NCEER-92-0019*, National Center for Earthquake Engineering Research, Buffalo, NY, Vol. I, pp. 351–365.
Bayrak, O., and Sheikh, S. A. (1997). "High strength concrete columns under simulated earthquake loading." *ACI Structural J.*, 97(6), 708–722.
Baziar, M., and Dobry, R. (1995). "Residual strength and large-deformation potential of loose silty sands." *J. Geotech. Engrg.*, 121(12), 896–906.
Baziar, M. H., Dobry, R., and Elgamal, A-W. M. (1992). "Engineering evaluation of permanent ground deformations due to seismically-induced liquefaction." *Rep. No. NCEER-92-0007*, National Center for Earthquake Engineering Research, Buffalo, NY.
Beaty, M. H., and Byrne, P. M. (1998). An effective stress model for predicting liquefaction behavior of sand, *In Proceedings of Specialty Conf., Geotechnical Earthquake Engg. and Soil Dynamics III*, Seattle, ASCE GSP No. 75, Edited by Dakouluas, M. and Holtz, R.D., V. 1, pp. 766–777.
Bello, M., Cole, C. A., Knudsen, K. L., Turner, F. M., Parker, D., and Bott, J. (2006). "1 San Francisco Bay area fire stations—seismic risk assessment." *Proc. of the 100th Anniversary Earthquake Conference*, San Francisco, CA.
Benzoni, G., and Innamorato, D. (2007). "Star seismic brace tests." Univ. of California at San Diego, San Diego.
Berry, M., and Eberhard, M. (2005). "Practical performance model for bar buckling." *J. Struct. Eng.*, 131(7), 1060–1070.
Beyer, K., and Dazio, A. (2011). "Quasi-static cyclic tests on masonry spandrels." Accepted in 2011 for publication in *Earthquake Spectra*. Earthquake Engineering Research Institute. Oakland, CA.
Birely, A., Lowes, L. N., and Lehman, D. E. (2009). "A practical model for beam-column and connection behavior in reinforced concrete frames." *Proceedings of the ATC-SEI Conference on Improving the Seismic Performance of Existing Buildings and Other Structures*. San Francisco.
Biskinis, D. E., Roupakias, G. K., and Fardis, M. N. (2004). "Degradation of shear strength of reinforced concrete members with inelastic cyclic displacements." *ACI Struct. J.*, 101(6), 773–783.

Bouwkamp, J. G., and Meehan, J. F. (1960). "Drift limitations imposed by glass." *Proc. Second World Conference on Earthquake Engineering*, Tokyo, 1763–1778.

Bowles, J. E. (1988). *Foundation analysis and design*, 4th Ed., McGraw-Hill, New York.

Bozorgnia, Y., Mansour, N., and Cambell, K. W. (1996). "Relationship between vertical and horizontal response spectra for the Northridge Earthquake," *Proc. of the Eleventh World Congress on Earthquake Engineering*, Acapulco, Mexico.

Bracci, J. M., Kunnath, S. K., and Reinhorn, A. M. (1997). "Seismic performance and retrofit evaluation of reinforced concrete structures." *J. Struct. Eng.*, 123(1), 3–10.

Breyer, D. E., Fridley, K. J., and Cobeen, K. E. (1999). *Design of wood structures*, 4th Ed., McGraw-Hill, New York.

Brick Industry Association (BIA). (2005). "Maintenance of brick masonry." *Technical Notes on Brick Construction TN46*, Reston, VA.

Brown, J., and Kunnath, S. K. (2004). "Low cycle fatigue failure of reinforcing steel bars." *ACI Materials J.*, 101(6), 457–466.

Building Officials and Code Administrators International (BOCA). (1999). *National building code*, Country Club Hills, IL.

Building Seismic Safety Council (BSSC). (2000). *NEHRP recommended provisions for seismic regulations for new buildings and other structures*, prepared by BSSC for the Federal Emergency Management Agency, Washington, DC.

California Building Standards Commission (CBSC). (2010a). *California building code*,. Sacramento, CA.

California Building Standards Commission (CBSC). (2010b). *California historic building code*, Sacramento, CA.

Caltrans. (2006). *Seismic design criteria*, California Department of Transportation, Sacramento, CA.

Calvi, G. M. (1988). "Correlation between ultrasonic and load tests on old masonry specimens." *Proc. of Eighth International Brick/Block Masonry Conference*, Elsevier Applied Science, Essex, U.K., pp. 1665–1672.

Ceilings and Interior Systems Construction Association (CISCA). (1990). *Recommendations for direct-hung acoustical and lay-in panel ceilings, seismic zones 3–4*, Deerfield, IL.

Ceilings and Interior Systems Construction Association (CISCA). (1991). *Recommendations for direct-hung acoustical and lay-in panel ceilings, seismic zones 0–2*, Deerfield, IL.

Cetin, K., Seed, R., Der Kiureghian, A., Tokimatsu, K., Harder, L., Jr., Kayen, R., and Moss, R. (2004). "Standard penetration test-based probabilistic and deterministic assessment of seismic soil liquefaction potential." *J. Geotech. Geoenviron. Eng.*, 130(12), 1314–1340.

Chiou, Y., Tzeng, J., and Liou, Y. (1999). "Experimental and analytical study of masonry infilled frames." *Journal of Structural Engineering*, 125(10), 1109–1117.

Cho, D. M., and Retamal, E. (1993). "The Los Angeles County emergency operations center on high-damping rubber bearings to withstand an earthquake bigger than the big one." *Proc. of Seminar on Seismic Isolation, Passive Energy Dissipation, and Active Control*, Applied Technology Council *Report No. ATC-17-1*, Redwood City, CA, pp. 209–220.

Cho, J.-Y., and Pincheira, J. A. (2006). "Inelastic analysis of reinforced concrete columns with short lap splices subjected to reversed cyclic loads." *ACI Struct. J.*, 103(2), 280–290.

Computers and Structures, Inc. (CSI). (2012a). *ETABS: Integrated analysis, design and drafting of building systems*, Berkeley, CA.

Computers and Structures, Inc. (CSI). (2012b). *SAP2000: Integrated solution for structural analysis and design*, Berkeley, CA.

Concrete Anchor Manufactuers' Asociation (CAMA). (2011). "Special guidelines for expansion and adhesive anchors." Cleveland, OH.

Concrete Reinforcing Steel Institute (CRSI). (1981). *Evaluation of reinforcing steel systems in old reinforced concrete structures*, Chicago.

Constantinou, M. C., Tsopelas, P., Kasalanati, A., and Wolff, E. (1999). "Property modification factors for seismic isolation bearings." *Rep. No. MCEER-99-0012*, Multidisciplinary Center for Earthquake Engineering Research, State Univ. of New York at Buffalo, NY.

Constantinou, M. C., Tsopelas, P. C., Kim, Y.-S., and Okamoto, S. (1993). "NCEER-TAISEI corporation research program on sliding seismic isolation systems for bridges: Experimental and analytical study of friction pendulum system (FPS)." *Rep. No. NCEER-93-0020*, National Center for Earthquake Engineering, State Univ. of New York at Buffalo, NY.

Costley, A. C., and Abrams, D. P. (1996). "Dynamic response of unreinforced masonry buildings with flexible diaphragms." *Report No. NCEER-96-0001*. Multidisciplinary Center for Earthquake Engineering Research, State University of New York at Buffalo, Buffalo, New York.

Dalrymple, G. A. (2006). "Nondestructive test methods for evaluating masonry structures."⟨www.masonrymagazine.com/2-06/technology.html⟩. Masonry Contractors Association. Algonquin, IL.

Dashti, S., Bray, J., Pestana, J., Riemer, M., and Wilson, D. (2010). "Mechanisms of seismically induced settlement of buildings with shallow foundations on liquefiable soil." *J. Geotech. Geoenviron. Eng.*, 136(1), 151–164.

Davaran, A., and Far, N. E. (2009). "An inelastic model for low cycle fatigue prediction in steel braces." *J. Constr. Steel Res.*, 65, 523–530.

Deng, L., Kutter, B. L., and Kunnath, S. K. (2012). "Probabilistic seismic performance of rocking-foundation and hinging-column bridges." *Earthquake Spectra*, 28(4), 1423–1446.

Department of the Army, Navy, and Air Force. (1973). *Seismic design of buildings, TM 5-809-10.1*, Washington, DC.

Department of the Army, Navy, and Air Force. (1986). *Seismic design guidelines for essential buildings, TM 5-809-10-1*, Washington, DC.

Department of Energy (DOE). (1997). "Seismic evaluation procedure for equipment in U.S. Department of Energy facilities." *DOE/EH-545*, U.S. Department of Energy, Washington, DC.

Derakhshan, H. (2011). "Seismic assessment of out-of-plane loaded unreinforced masonry walls." Ph.D. Thesis, Faculty of Engineering, The University of Auckland.

Di Sarno, L, and Elnashai, A. S. (2009). "Bracing systems for seismic retrofitting of steel frames." *J. Constr. Steel Res.*, 65, 452–465.

Di Sarno, L., Elnashai, A. S., and Nethercot, D. A. (2006). "Seismic retrofitting of framed structures with stainless steel." *J. Constr. Steel Res.*, 62, 93–104.

Dizhur, D., Derakhshan, H., Lumantarna, R., Ingham, J. M. (2010). "Earthquake-damaged unreinforced masonry building tested in situ," *Journal of the Structural Engineering Society (SESOC) of New Zealand*, 23(2), 76–89.

Doherty, K. T. (2000). "An investigation of the weak links in the seismic load path of unreinforced masonry buildings." PhD Thesis, Faculty of Engineering of the University of Adelaide, Department of Civil and Environmental Engineering.

Doherty, K. T., Rodolico, K. T., Lam, N., Wilson, J., and Griffith, M. C. (2000). "The modeling of earthquake induced collapse of unreinforced masonry walls combining force and displacement principals," *Proc. of the 12th World Conference on Earthquake Engineering*, Auckland, New Zealand.

Dovich L. M., and Wight J. K. (2005). "Effective slab width model for seismic analysis of flat slab frames." *ACI Structural Journal*, 102(6), 868–875.

Drysdale, R. G. (1999). *Masonry structures*, 2nd Ed., The Masonry Society, Longmont, CO.

Ebeling, R. M., and Morrison, E. E. Jr. (1992). *The seismic design of waterfront retaining structures*, U.S. Army Technical Report ITL-92-11, U.S. Navy Technical Report NCEL TR-939, Information Technology Laboratory, Department of the Army, Waterways Experiment Station, Vicksburg MS.

Egan, J. A., Youngs, R. R., and Power, M. S. (1992). *Assessment of nonliquefaction along Coyote Creek during the 1989 Loma Prieta Earthquake, final technical report*, U.S. Geological Survey.

El-Metwally, S. E., and Chen, W. F. (1988). "Moment-rotation modeling of reinforced concretebeam-column connections." *ACI Structural Journal*, 85(4), 384–394.

Elwood, K. J., and Eberhard, M. O. (2006). "Effective stiffness of reinforced concrete columns." PEER Research Digest, Pacific Earthquake Engineering Research Center, Univ. of California, Berkeley, CA.

Elwood, K. J., and Eberhard, M. O. (2009). "Effective stiffness of reinforced concrete columns," *ACI Structural Journal*, American Concrete Institute, vol. 106, no. 4, July 2009, pp. 476–484.

Elwood, K. J., Matamoros, A. B., Wallace, J. W., Lehman, D. E., Heintz, J. A., Mitchell, A. D., Moore, M. A., Valley, M. T., Lowes, L. N., Comartin, C. D., and Moehle, J. P. (2007). "Update to ASCE/SEI 41 concrete provisions." *Earthquake Spectra*, 23(3), 493–523.

Elwood, K. J., and Moehle, J. P. (2004). "Evaluation of existing reinforced concrete columns." *Proc. of the Thirteenth World Conference on Earthquake Engineering*, Vancouver, British Columbia.

Elwood, K. J., and Moehle, J. P. (2005a). "Drift capacity of reinforced concrete columns with light transverse reinforcement." *Earthquake Spectra*, 21(1), 71–89.

Elwood, K. J., and Moehle, J. P. (2005b). "Axial capacity model for shear-damaged columns." *ACI Struct. J.*, 102(4), 578–587.

Epperson, G. S., and Abrams, D. P. (1989). "Nondestructive evaluation of masonry buildings, advanced construction technology center." *Rep. No. 89-26-03*, College of Engineering, Univ. of Illinois at Urbana, IL.

Fahnestock, L. A., Sause, R., and Ricles, J. M. (2007). "Seismic response and performance of buckling-restrained braced frames." *J. Struct. Eng.*, 133(9), 1195–1204.

Fahnestock, L. A., and Stoakes, C. D. (2009). "Cyclic behavior and performance of beam-column connections in concentrically braced frames." *Structures Congress 2009: Don't Mess with Structural Engineers: Expanding Our Role*, L. Griffiths, T. Helwig, M. Waggoner, and M. Hoit, eds., ASCE, Reston, VA, pp. 1–8.

Fardis, M. N., and Biskinis, D. E. (2003). "Deformation capacity of RC members, as controlled by flexure or shear." *Otani Symposium 2003*, Tokyo, Japan, pp. 511–530.

Federal Emergency Management Agency (FEMA). (1992a). "NEHRP handbook of techniques for the seismic rehabilitation of existing buildings." *FEMA 172*, prepared by the Building Seismic Safety Council for the Federal Emergency Management Agency, Washington, DC.

Federal Emergency Management Agency (FEMA). (1992b). "NEHRP handbook for the seismic evaluation of existing buildings." *FEMA 178*, prepared by the Building Seismic Safety Council for the Federal Emergency Management Agency, Washington, DC.

Federal Emergency Management Agency (FEMA). (1995a). "Typical costs for seismic rehabilitation of existing buildings, Vol. 1: Summary," 2nd Ed., *FEMA 156*, prepared by the Hart Consultant Group for the Federal Emergency Management Agency, Washington, DC.

Federal Emergency Management Agency (FEMA). (1995b). "Typical costs for seismic rehabilitation of existing buildings, Vol. 2: Supporting documentation," 2nd Ed., *FEMA 157*, prepared by the Hart Consultant Group for the Federal Emergency Management Agency, Washington, DC.

Federal Emergency Management Agency (FEMA). (1997a). "NEHRP guidelines for the seismic rehabilitation of buildings." *FEMA 273*, prepared by the Building Seismic Safety Council for the Federal Emergency Management Agency, Washington, DC.

Federal Emergency Management Agency (FEMA). (1997b). "NEHRP commentary on the guidelines for seismic rehabilitation of buildings." *FEMA 274*, prepared by the Building Seismic Safety Council for the Federal Emergency Management Agency, Washington, DC.

Federal Emergency Management Agency (FEMA). (1997c). "Guidelines for the seismic rehabilitation of buildings: Example applications." *FEMA 276*, prepared by the Applied Technology Council for the Building Seismic Safety Council and the Federal Emergency Management Agency, Washington, DC.

Federal Emergency Management Agency (FEMA). (1998a). "Planning for seismic rehabilitation: Societal issues." *FEMA 275*, prepared by VSP Associates for the Building Seismic Safety Council and Federal Emergency Management Agency, Washington, DC.

Federal Emergency Management Agency (FEMA). (1997). *NEHRP recommended provisions for seismic regulations for new buildings and other structures, Part 1: Provisions*. Prepared by the Building Seismic Safety Council for the Federal Emergency Management Agency, Washington, D.C. (FEMA Publication No. 302).

Federal Emergency Management Agency (FEMA). (1997). *NEHRP recommended provisions for seismic regulations for new buildings and other structures, Part 2: Commentary*. Prepared by the Building Seismic Safety Council for the Federal Emergency Management Agency, Washington, D.C. (FEMA Publication No. 303).

Federal Emergency Management Agency (FEMA). (1998b). "Evaluation of earthquake-damaged concrete and masonry wall buildings: Basic procedures manual." *FEMA 306*, prepared by the Applied Technology Council (*ATC-43* Project), for the Federal Emergency Management Agency, Washington, DC.

Federal Emergency Management Agency (FEMA). (1998c). "Evaluation of earthquake-damaged concrete and masonry wall buildings: Technical resources." *FEMA 307*, prepared by the Applied Technology Council (*ATC-43* Project), for the Federal Emergency Management Agency, Washington, DC.

Federal Emergency Management Agency (FEMA). (1998d). "Repair of earthquake damaged concrete and masonry wall buildings." *FEMA 308*, prepared by the Applied Technology Council (*ATC-43* Project), for the Federal Emergency Management Agency, Washington, DC.

Federal Emergency Management Agency (FEMA). (1998e). "Handbook for the seismic evaluation of buildings: A prestandard." *FEMA 310*, prepared by the American Society of Civil Engineers for the Federal Emergency Management Agency, Washington, DC.

Federal Emergency Management Agency (FEMA). (2000a). "Recommended seismic design criteria for moment-resisting steel frame structures." *FEMA 350*, prepared by the SEAOC, ATC, and CUREE Joint Venture for the Federal Emergency Management Agency, Washington, DC.

Federal Emergency Management Agency (FEMA). (2000b). "Recommended seismic evaluation and upgrade criteria for existing welded moment resisting steel structures." *FEMA 351*, prepared by the SEAOC, ATC, and CUREE Joint Venture for the Federal Emergency Management Agency, Washington, DC.

Federal Emergency Management Agency (FEMA). (2000c). "Recommended postearthquake evaluation and repair criteria for welded steel moment-frame buildings." *FEMA 352*, prepared by SEAOC, ATC, and CUREE Joint Venture for the Federal Emergency Management Agency, Washington, DC.

Federal Emergency Management Agency (FEMA). (2000d). "Recommended specifications and quality assurance guidelines for steel moment-frame construction for seismic applications." *FEMA 353*, prepared by the SEAOC, ATC, and CUREE Joint Venture for the Federal Emergency Management Agency, Washington, DC.

Federal Emergency Management Agency (FEMA). (2000e). "State of art report on connection performance." *FEMA 355D*, prepared by the SEAOC, ATC, and CUREE Joint Venture for the Federal Emergency Management Agency, Washington, DC.

Federal Emergency Management Agency (FEMA). (2000f). "State of art report on performance prediction and evaluation." *FEMA 355F*, prepared by the SEAOC, ATC, and CUREE Joint Venture for the Federal Emergency Management Agency, Washington, DC.

Federal Emergency Management Agency (FEMA). (2000g). "Prestandard and commentary for the seismic rehabilitation of buildings." *FEMA 356*, prepared by the American Society of Civil Engineers for the Federal Emergency Management Agency, Washington, DC.

Federal Emergency Management Agency (FEMA). (2000h). "Global topics report on the prestandard and commentary for the seismic rehabilitation of buildings." *FEMA 357*, prepared by the American Society of Civil Engineers for the Federal Emergency Management Agency, Washington, DC.

Federal Emergency Management Agency (FEMA). (2001). "NEHRP recommended provisions for seismic regulations for new buildings and other structures, Part 1: Provisions and Part 2: Commentary." *FEMA 368 and 369*, prepared by the Building Seismic Safety Council for the Federal Emergency Management Agency, Washington, DC.

Federal Emergency Management Agency (FEMA). (2002). "Rapid visual screening of buildings for potential seismic hazards: A handbook." *FEMA 154*, prepared by the Applied Technology Council (*Rep. No. ATC-21*) for the Federal Emergency Management Agency, Washington, DC.

Federal Emergency Management Agency (FEMA). (2004). "NEHRP recommended provisions for seismic regulations for new buildings and other structures, Part 1: Provisions and Part 2: Commentary." *FEMA 450*, prepared by the Building Seismic Safety Council for the Federal Emergency Management Agency, Washington, DC.

Federal Emergency Management Agency (FEMA). (2005). "Improvement of nonlinear static seismic analysis procedures." *FEMA 440*, prepared by the Applied Technology Council for the Federal Emergency Management Agency, Washington, DC.

Federal Emergency Management Agency (FEMA). (2007). "Techniques for the seismic rehabilitation of existing buildings." *FEMA 547*, Federal Emergency Management Agency, Washington, DC.

Federal Emergency Management Agency (FEMA). (2009a). "The effects of strength and stiffness degradation on seismic response." *FEMA P-440A*, prepared by the Applied Technology Council for the Federal Emergency Management Agency, Washington, DC.

Federal Emergency Management Agency (FEMA). (2009b). "Quantification of building seismic performance factors." *FEMA P-695*, prepared by the Applied Technology Council for the Federal Emergency Management Agency, Washington, DC.

Federal Emergency Management Agency (FEMA). (2009c). "NEHRP recommended provisions for seismic regulations for new buildings and other structures." *FEMA P-750*, prepared by the Building Seismic Safety Council for the Federal Emergency Management Agency, Washington, DC.

Federal Emergency Management Agency (FEMA). (2011). "Reducing the risks of nonstructural earthquake damage, a practical guide." *FEMA E-74*, Washington, DC.

Federal Emergency Management Agency (FEMA). (2013). "Guidelines for the Seismic Retrofit of Weak-Story Wood-Framed Buildings." *FEMA P-807*, prepared by the Applied Technology Council for the Federal Emergency Management Agency, Washington, DC.

Fell, B. V., Kanvinde, A. M., and Deierlein, G. G. (2010). "Large-scale testing and simulation of earthquake induced ultra low cycle fatigue in bracing members subjected to cyclic inelastic buckling." *Rep. No. 172*,

John A. Blume Earthquake Engineering Center, Department of Civil and Environmental Engineering, Stanford Univ., Stanford, CA.

Fell, B. V., Kanvinde, A. M., Deierlein, G. G., and Myers, A. T. (2009). "Experimental investigation of inelastic cyclic buckling and fracture of steel braces." *J. Struct. Eng.*, 135(1), 19–22.

Franklin, S., Lynch, J., and Abrams, D. P. (2001). "Performance of rehabilitated URM shear walls: Flexural behavior of piers," Department of Civil Engineering, University of Illinois at Urbana-Champaign Urbana, Illinois.

Furlong, R. W., Hsu, C. T. T., and Mirza, S. A. (2004). "Analysis and design of concrete columns for biaxial bending-overview." *ACI Structural Journal*, 101(3), 413–23.

Gajan, S., Raychowdhury, P., Hutchinson, T. C., Kutter, B. L., and Stewart, J. P. (2010). "Application and validation of practical tools for nonlinear soil-foundation interaction analysis." *Earthquake Spectra*, 26(1), 111–129.

Ghobarah, A., and Biddah, A. (1999). "Dynamic analysis of reinforced concrete frames including joint shear deformation." *Engineering Structures*, 21, 971–987.

Griffith, M. C., Magenes, G., Melis, G., and Picchi, L. (2003). "Evaluation of out-of-plane stability of unreinforced masonry walls subjected to seismic excitation." *Journal of Earthquake Engineering*, 141–169.

Hamburger, R. O. (1993). "Methodology for seismic capacity evaluation of steel-frame buildings with infill unreinforced masonry." *Proc. of 1993 National Earthquake Conference, Central U.S. Earthquake Consortium*, Memphis, Tennessee, Vol. II, pp. 173–191.

Hanna, A. M. (1981). "Foundations on strong sand overlying weak sand." *J. Geotech. Engrg. Div.*, 107(7), 915–927.

Hanna, A. M., and Meyerhof, G. G. (1980). "Design charts for ultimate bearing capacity of foundations on sand overlying soft clay." *Canadian Geotechnical J.*, 17, 300–303.

Hidalgo, P. A., Ledezma, C. A., and Jordan, R. (2002). "Seismic behavior of squat reinforced concrete shear walls." *Earthquake Spectra*, 18(2), 287–308.

Housner, G. W. (1963). "The behavior of inverted pendulum structures during earthquakes." *Bull. Seismological Soc. of America*, 53(2), 403–417.

Hsu, C. T. T. (1988). "Analysis and design of square and rectangular columns by equation of failure surface." *ACI Structural Journal*, 85(2), 167–179.

Hwang, S.-J., and Moehle, J. P. (2000). "Models for laterally load slab-column frames." *ACI Struct. J.*, 97(2), 345–353.

Idriss, I. M., and Boulanger, R. W. (2008). "Soil liquefaction during earthquakes." *EERI MNO-12*, Earthquake Engineering Research Institute, Oakland, CA.

International Code Council (ICC). (2000). *International building code*. Washington, D.C.

International Code Council (ICC). (2012). *International building code*. Washington, D.C.

International Code Council Evaluation Services (ICC-ES). (2010). "Acceptance criteria for seismic qualification testing of nonstructural components." *ICC-ES AC-156*, Whittier, CA.

International Council Evaluation Services (ICC-ES). (2010). "Acceptance criteria for seismic certification by shake-table testing of nonstructural components." *ICC-ES AC 156*, Whittier, CA.

International Code Council Evaluation Services (ICC-ES). (2011b). "Acceptance criteria for quality documentation." *ICC-ES AC-10*, Whittier, CA.

International Code Council Evaluation Services (ICC-ES). (2011c). "Acceptance criteria for adhesive anchors in masonry elements." *ICC-ES AC-58*, Whittier, CA.

International Code Council Evaluation Services (ICC-ES). (2011d). "Acceptance criteria for mechanical anchors in concrete elements." *ICC-ES AC-193*, Whittier, CA.

International Code Council Evaluation Services (ICC-ES). (2011e). "Acceptance criteria for post-installed adhesive anchors in concrete elements." *ICC-ES AC-308*, Whittier, CA.

International Conference of Building Officials (ICBO). (1994). *Uniform building code*. Whittier, CA.

International Conference of Building Officials (ICBO). (1997). "Uniform code for building conservation." *UCBC*, Whittier, CA.

International Union of Laboratories and Experts in Construction Materials, Systems and Structures (RILEM). (2001). *Recommendations of RILEM TC 127-MS: Tests for masonry materials and structures—MS.D3: Radar investigation of masonry—MS.D4: Measurement of local dynamic behaviour for masonry—MS.D8: Electrical conductivity investigation of masonry.* RILEM Publications SARL. Bagneux, France.

Ishihara, K. (1993). "Liquefaction and flow failure during earthquakes," *Géotechnique*, 43(3), pp. 351–415.

Ishihara, K., and Yoshimine, M. (1992). "Evaluation of settlements in sand deposits following liquefaction during earthquakes." *Soils and Foundations*, 32(1), 173–188.

Ismail, N., Petersen, R. B., Masia, M. J., and Ingham, J. M. (2011). "Diagonal shear behaviour of unreinforced masonry wallettes strengthened using twisted steel bars." *Constr Build Mater*, 25(12), 4386–4396.

Institute of Electrical and Electronics Engineers (IEEE). (1997). "IEEE recommended practice for seismic design of substations." *IEEE 693*, New York.

Jefferies, M. G., and Been, K. (2006). *Soil Liquefaction—A critical state approach*. Taylor & Francis.

Johnson, J. J., Conoscente, J. P., and Hamburger, R. O. (1992). "Dynamic analysis of impacting structural systems." *Proc. of the Tenth World Conference on Earthquake Engineering*, Madrid, Spain.

Jordan, Santos, Jr. (2010). "Finite element simulations of exposed column base plate connections subjected to axial compression and flexure." Thesis, Univ. of California, Davis, CA.

Kang, T. H.-K., Elwood, K. J., and Wallace, J. W. (2006). "Dynamic tests and modeling of RC and PT slab-column connections." *8th U.S. National Conference on Earthquake Engineering*, Paper 0362.

Kang, T. H-K., and Wallace, J. W. (2005). "Responses of flat plate systems subjected to simulated earthquake loading." *ACI Struct. J.*, 102(5), 763–773.

Kang, T. H-K., and Wallace, J. W. (2006). "Punching of reinforced and post-tensioned concrete slab-column connections." *ACI Struct. J.*, 104(4), 531–540.

Kasai, K., Maison, B. F., and Patel, D. J. (1990). "An earthquake analysis for buildings subjected to a type of pounding." *Proc. of the Fourth U.S. National Conference of Earthquake Engineering*, Earthquake Engineering Research Institute, Oakland, CA.

Kehoe, B. E., and Attalla, M. R. (2000). "Considerations of vertical acceleration on structural response." *Proc. of the Twelfth World Congress on Earthquake Engineering*, Auckland, New Zealand.

Kelly, J. M. (1988). "Base isolation in Japan, 1988," *Rep. No. UCB/EERC-88/20*, Earthquake Engineering Research Center, Univ. of California, Berkeley, CA.

Kelly, J. M. (1993). *Earthquake-resistant design with rubber*, Springer-Verlag, London.

Kingsley, G. R., Noland, J. L., and Atkinson, R. H. (1987). "Nondestructive evaluation of masonry structures using sonic and ultrasonic pulse velocity techniques." *Proc. of Fourth North American Masonry Conference*, The Masonry Society, Boulder, CO.

Knox, C. L. (2012). "Assessment of perforated unreinforced masonry walls responding in-plane." PhD thesis, Department of Civil and Environmental Engineering, University of Auckland, Auckland, New Zealand.

Kramer, S. L. (1996). *Geotechnical Earthquake Engineering*: Prentice Hall, Upper Saddle River, New Jersey.

Lam, N., Griffith, M., Wilson, J., and Doherty, K. (2003). "Time history analysis of URM walls in out-of-plane flexure", *Journal of Engineering Structures*. Elsevier Science. 25(6), 743–754.

Lam, N. T. K., Wilson, J. L., and Hutchinson, G. L. (1995). "The seismic resistance of unreinforced masonry cantilever walls in low seismicity areas." *Bulletin of the New Zealand National Society for Earthquake Engineering*, 28(3), 179–195. New Zealand National Society for Earthquake Engineering

Liu, J., and Astaneh-Asl, A. (2000). "Experimental and analytical studies of the cyclic behavior of simple connections in steel frame buildings." *Rep. No. UCB/CEE-STEEL-2000/01*, Department of Civil and Environmental Engineering, Univ. of California, Berkeley, CA.

Luco, N., Ellingwood, B. R., Hamburger, R. O., Hooper, J. D., Kimball, J. K., and Kircher, C. A. (2007). "Risk-targeted versus current seismic design maps for the conterminous United States," *SEAOC 2007 Convention Proceedings*. Structural Engineers Association of California, Sacramento, California.

Luo, Y. H., Durrani, A. J., and Conte, J. P. (1994). "Equivalent frame analysis of flat plate buildings for seismic loading." *J. Struct. Eng.*, 120(7), 2137–2155.

Lynn, A. C., Moehle, J. P., Mahin, S. A., and Holmes, W. T. (1996). "Seismic evaluation of existing reinforced concrete columns." *Earthquake Spectra*, 12(4), 715–739.

Magenes, G., and Calvi, G. M. (1992). "Cyclic behaviour of brick masonry walls." *Proceedings of the Tenth World Conference on Earthquake*

Engineering., Published by A.A. Balkema, Rotterdam, Netherlands, Madrid, Spain.

Magenes, G., and Calvi, G. M. (1995). "Shaking table tests on brick masonry walls," *Proceedings of the 10th European Conference on Earthquake Engineering, Vienna, Austria, Vol. 3*, pp. 2419–2424.

Makris, N., and Konstantinidis, D. (2001). *The rocking spectrum and the shortcomings of design guidelines*, Pacific Earthquake Engineering Research Center, Berkeley, CA.

Makris, N., and Konstantinidis, D. (2003). "The rocking spectrum and the limitations of practical design methodologies." *Earthquake Engineering and Structural Dynamics*, 32(2), 265–289

Makris, N., and Roussos, Y. (1998). *Rocking response and overturning of equipment under horizontal pulse-type motions*, Pacific Earthquake Engineering Research Center, Berkeley, CA.

Manufacturers Standardization Society (MSS) of the Valve and Fitting Industry. (2009). "Pipe hangers and supports: Materials, design, and manufacture." *SP-58*, Vienna, VA.

Masek, John, and Ridge, Robert. (2009). "Identification of methods to achieve successful implementation of nonstructural and equipment seismic restraints," Earthquake Engineering Research Institute, Oakland, CA.

Melek, M., and Wallace, J. W. (2004). "Cyclic behavior of columns with short lap splices." *ACI Struct. J.*, 101(6), 802–811.

Merritt, S., Uang, C. M., and Benzoni, G. (2003). *Subassemblage testing of star seismic buckling-restrained braces*, Univ. of California at San Diego, San Diego.

Meyerhof, G. G. (1974). "Ultimate bearing capacity of footings on sand layer overlying clay." *Canadian Geotechnical J.*, 11(2), 223–229.

Mitra, N., and Lowes, L. N. (2007). "Evaluation, calibration and verification of a reinforced concrete beam-column joint model." *Journal of Structural Engineering*, 133(1), 105–120. American Society of Civil Engineers, Reston, VA.

Mokwa, R., and Duncan, J. M. (2000). "Investigation of the resistance of pile caps and integral abutments to lateral loading." *Rep. No. FHWA/VTRC 00-CR4*, Virginia Transportation Research Council, Virginia Department of Transportation, Richmond, VA.

Moon, F. L. (2004). "Seismic strengthening of low-rise unreinforced masonry structures with flexible diaphragms." PhD Dissertation. Georgia Institute of Technology, Atlanta, GA,

Moon, F. L., Yi, T., Leon, R. T., and Kahn, L. F. (2006). "Recommendations for seismic evaluation and retrofit of low-rise URM structures." *Journal of Structural Engineering*, 132(5), 663–672.

Murota, N., Goda, K., Suzusi, S., Sudo, C., and Suizu, Y. (1994). "Recovery characteristics of dynamic properties of high-damping rubber bearings." *Proc. of Third U.S.-Japan Workshop on Earthquake Protective Systems for Bridges*, Berkeley, CA, *Rep. No. NCEER 94-0009*, National Center for Earthquake Engineering Research, State Univ. of New York at Buffalo, NY, pp. 1–63 to 2–76.

Nagarajaiah, S., Reinhorn, A., and Constantinou, M. C. (1991). "3D-BASIS: Nonlinear dynamic analysis of three dimensional base isolated structures." *Rep. No. NCEER-91-0005*, National Center for Earthquake Engineering Research, State Univ. of New York at Buffalo, NY.

National Bureau of Standards (NBS). (1977). "Evaluation of structural properties of masonry in existing buildings." *Building Science Series 62*, National Bureau of Standards (now National Institute of Standards and Technology), U.S. Department of Commerce, Washington, DC.

National Fire Protection Association (NFPA). (1994a). "Hazardous chemicals data." *NFPA 49-94*, Quincy, MA.

National Fire Protection Association (NFPA). (1994b). "Guide to fire hazard properties of flammable liquids, gases, and volatile solids." *NFPA 325-94*, Quincy, MA.

National Fire Protection Association (NFPA). (1997). "Manual of hazardous chemical reactions." *NFPA 491*, Quincy, MA.

National Fire Protection Association (NFPA). (2012). "Standard system for the identification of the fire hazards of materials." *NFPA 704*, Quincy, MA.

National Institute of Standards and Technology (NIST). (2010a). "Applicability of nonlinear multiple-degree-of-freedom modeling for design." *NIST GCR 10-917-9*, prepared by NEHRP Consultants Joint Venture for NIST, Gaithersburg, MD.

National Institute of Standards and Technology (NIST). (2010b). "Applicability of nonlinear multiple-degree-of-freedom modeling for design, supporting documentation." *NIST GCR 10-917-9*, prepared by NEHRP Consultants Joint Venture for NIST, Gaithersburg, MD.

National Institute of Standards and Technology (NIST). (2010c). "NEHRP seismic design technical brief no. 4: Nonlinear structural analysis for seismic design: A guide for practicing engineers." *NIST GCR 10-917-5*, prepared by the Applied Technology Council and the Consortium of Universities for Research in Earthquake Engineering for NIST, Gaithersburg, MD.

National Institute of Standards and Technology (NIST). (2012). "Standards of seismic safety for existing federally owned and leased buildings." *ICSSC RP8*. Gaithersburg, MD.

National Park Service (NPS). (1995). *National Park Service catalog of historic preservation brief*, Washington, DC.

National Park Service (NPS). (1998). "Repointing mortar joints in historic masonry buildings." *Preservation Brief 2*, Washington, DC.

National Park Service (NPS). (2011). *Technical preservation services for historic buildings sales publication catalog*, Washington, DC ⟨www.cr.nps.gov/hps/tps/index.htm⟩.

National Research Council Canada. (2008). "Repointing mortars for older masonry buildings—Design considerations and site considerations." Construction Technology Update Nos. *67* and *68*, National Research Council Canada. Ottawa, Ontario, Canada.

NAVFAC. (1986a). "Soil mechanics: Naval Facilities Engineering Command design manual." *NAVFAC DM-7.01*, U.S. Department of the Navy, Alexandria, VA.

NAVFAC. (1986b). "Foundation and earth structures: Naval Facilities Engineering Command design manual." *NAVFAC DM-7.02*, U.S. Department of the Navy, Alexandria, VA.

Newell, J., Uang, C. M., and Benzoni, G. (2006). "Subassemblage testing of CoreBrace buckling-restrained braces." (G series), Univ. of California, San Diego, La Jolla, CA.

Newmark, N. M. (1965). "Effect of earthquake on dams and embankments." *Geotechnique*, 15, 139–160.

Nims, D. F., Richter, P. J., and Bachman, R. E. (1993). "The use of the energy dissipation restraint for seismic hazard mitigation." *Earthquake Spectra*, 9(3), 467–498.

Noland, J. L., Atkinson, R. H., and Kingsley, G. R. (1987). "Nondestructive methods for evaluating masonry structures." *Proc. of International Conference on Structural Faults and Repair*.

Olson, S., and Johnson, C. (2008). "Analyzing liquefaction-induced lateral spreads using strength ratios." *J. Geotech. Geoenviron. Eng.*, 134(8), 1035–1049.

Olson, S. M., and Stark, T. D. (2002)."Liquefied strength ratio from liquefaction flow failure case histories." *Canadian Geotechnical Journal*, 39, 629–647.

Olson, S., and Stark, T. (2003). "Yield strength ratio and liquefaction analysis of slopes and embankments." *J. Geotech. Geoenviron. Eng.*, 129(8), 727–737.

Orangun, C. O., Jirsa, J. O., and Breen, J. E. (1977). "A reevaluation of test data on development length and splices." *ACI J.* Proc., 74(3), 114–122.

Pacific Earthquake Engineering Research Center (PEER)/Applied Technology Council (ATC). (2010). "Modeling and acceptance criteria for seismic design and analysis of tall buildings." *PEER/ATC 72-1*, Pacific Earthquake Engineering Research Center, Applied Technology Council.

Pacific Earthquake Engineering Research Center (PEER)/Earthquake Engineering Research Institute (EERI). (2006). "New information on seismic performance of concrete buildings." Seminar video download available at EERI.org.

Panagiotakos, T. B., and Fardis, M. N. (2001). "Deformation of reinforced concrete members at yielding and ultimate." *ACI Struct. J.*, 98(2), 135–147.

Paquette, J., and Bruneau, M. (2003). "Pseudo-dynamic testing of unreinforced masonry building with flexible diaphragm." *Journal of Structural Engineering*. ASCE. 129(6), 708–716.

Pecknold, D. A. (1975). "Slab effective width for equivalent frame analysis." *ACI J.*, 72(4), 294–299.

Pekcan, G., Mander, J., and Chen, S. (1995). "The seismic response of a 1:3 scale model RC structure with elastomeric spring dampers." *Earthquake Spectra*, 11(2), 249–267.

Penner, O., and Elwood, K. J. (2011). "Effect of diaphragm flexibility on seismic vulnerability of out-of-plane unreinforced masonry walls subjected to ground motions from the 2010 Darfield Earthquake," 9th Australasian Masonry Conference, Queenstown, New Zealand, 15–18 February.

Petersen, M. D., Frankel, A. D., Harmsen, S. C., Mueller, C. S., Haller, K. M., Wheeler, R. L., Wesson, R. L., Zeng, Y., Boyd, O. S., Perkins, D. M., Luco, N., Field, E. H., Wills, C. J., and Rukstales, K. S. (2008). *Documentation for the 2008 update of the United States National Seismic Hazard Maps: U.S. Geological Survey open-file report 2008–1128*, 61 p.

Portland City Auditor. (2013). *Portland City code and charter*. Portland, OR.
Power, M., Chiou, B., Abrahamson, N., Bozorgnia, Y., Shantz, T., and Roblee, C. (2008). "An overview of the NGA project," *Earthquake Spectra*, 24, 3–21.
Precast/Prestressed Concrete Institute (PCI). (2010). *PCI design handbook*. Chicago.
Priestley, M. J. N., Calvi, G. M., and Kowalsky, M. J.. (2007). *Displacement base seismic design of structures*. IUSS Press. Fondazione Eucentre, Pavia, Italy.
Priestley, M. J. N., Evison, R. J., and Carr, A. J. (1978). "Seismic response of structures free to rock on their foundations." *Bull. New Zealand National Society for Earthquake Engineering*, 11(3), 141–150.
Puebla, H. (1999). "A constitutive model for sand analysis of the CANLEX embankment." PhD. Thesis, Civil Engg. Dept., University of British Columbia, Vancouver, B.C.
Qaisrani, A.-N. (1993). "Interior post-tensioned flat-plate connections subjected to vertical and biaxial lateral loading." Ph.D. thesis, Dept. of Civil Engineering, Univ. of California, Berkeley, CA.
Rai, D. C., and Goel, S. C. (2003). "Seismic evaluation and upgrading of chevron braced frames." *J. Constr. Steel Res.*, 59, 971–994.
Rauch, A., and Martin III, J. (2000). "EPOLLS model for predicting average displacements on lateral spreads." *J. Geotech. Geoenviron. Eng.*, 126(4), 360–371.
Reaveley, L., et al. (2004). "CoreBrace Series E buckling-restrained brace test result." Univ. of Utah, Salt Lake City.
Reinhorn, A. M., Nagarajaiah, S., Constantinou, M. C., Tsopelas, P., and Li, R. (1994). "3D-BASIS-TABS (Version 2.0): Computer program for nonlinear dynamic analysis of three-dimensional base isolated structures." *Rep. No. NCEER-94-0018*, National Center for Earthquake Engineering Research, State Univ. of New York at Buffalo, NY.
Richards, P. W. (2009). "Seismic column demands in ductile braced frames." *J. Struct. Eng.*, 135(1), 33–41.
Roeder, C., Lehman, D. E., and Lumpkin, E. (2009a). "Fragility curves for concentrically braced steel frames with buckling braces." Rep. developed for the *ATC-58* Project Structural Performance Products Team, Dept. of Civil and Environmental Engineering, Univ. of Washington, Seattle.
Roeder, C. W., Lehman, D. E., Lumpkin, E., and Hsiao, P.-C. (2009b). "Seismic evaluation and rehabilitation of concentrically braced frames." *Proc. of the 2009 ATC & SEI Conference on Improving the Seismic Performance of Existing Buildings and Other Structures*.
Roeder, C., Lehman, D. E., Lumpkin, E., Hsiao, P.-C., and Palmer, K. (2011). "SCBF gusset plate connection design." 2011 T. R. Higgins Award Lecture, American Institute of Steel Construction. (AISC).
Roeder, C., Lehman, D., and Yoo, J. H. (2004). "Performance-based seismic design of braced-frame connections." *Pacific Structural Steel Conference*.
Russell, A. P., and Ingham, J. M. (2010). "The influence of flanges on the in-plane seismic performance of URM walls in New Zealand buildings." *Proceedings of 2010 NZSEE Conference*. New Zealand.
Saatcioglu, M., Alsiwat, J. M., and Ozcebe, G. (1992). "Hysteretic behavior of anchorage slip in R/C members." *J. Struct. Eng.*, 118(9), 2439–2458.
Salgado, R. (2008). *The engineering of foundations*, McGraw-Hill, New York.
Sansalone, M., and Carino, N. (1988). "Impact-echo method, detecting honeycombing, the depth of surface opening cracks, and ungrouted ducts." *Concrete Int.*, 10(4), 38–46.
Seattle Building Department. (2009). *Seattle building code.* Seattle, WA.
Secretary of the Interior. (1992). *Standards for the treatment of historic properties*, National Park Service, Washington, DC.
Secretary of the Interior. (1995). *Standards for the treatment of historic properties with guidelines for preserving, rehabilitating, restoring, and reconstructing historic buildings*, National Park Service, Washington, DC.
Secretary of the Interior. (1998). *1998 Proc. on disaster management programs for historic sites*, National Park Service, Washington, DC.
Seed, R. B., Cetin, K. O., Moss, R. E. S., Kammerer, A. M., Wu, J., Pestana, J. M., Riemer, M. F., Sancio, R. B., Bray, J. D., Kayen, R. E., and Faris, A. (2003). *Recent advances in soil liquefaction engineering, a unified and consistent framework*. University of California, Berkeley, Earthquake Engineering Research Center, Report No. EERC 2003-06, pp. 71.
Seed, R. B., and Harder, L. F. (1990). "SPT-based analysis of cyclic pore pressure generation and undrained residual strength." *Proc. of the H. B. Seed Memorial Symposium*, Vol. 2, pp. 351–376.
Seed, H. B., and Idriss, I. M. (1971). "Simplified procedure for evaluating soil liquefaction potential." *J. Soil Mech. and Found. Div.*, 97(9), 1249–1273.
Seed, H. B., Wong, R. T., Idriss, I. M., and Tokimatsu, K. (1986). "Moduli and damping factors for dynamic analyses of cohesionless soils." *J. Geotech. Engrg.*, 112(11), 1016–1032.
Sezen, H. (2002). "Seismic response and modeling of lightly reinforced concrete building columns." Ph.D. Dissertation, Dept. of Civil and Environmental Engineering, Univ. of California, Berkeley, CA.
Sezen, H., and Moehle, J. P. (2004). "Shear strength model for lightly reinforced concrete columns." *J. Struct. Eng.*, 130(11), 1692–1703.
Sezen, H., and Moehle, J. P. (2006). "Seismic tests of concrete columns with light transverse reinforcement." *ACI Struct. J.*, 103(6), 842–849.
Sharif, I., Meisl, C., and Elwood, K. J. (2007). "Assessment of ASCE 41 height to thickness ratio limits for URM walls," *Earthquake Spectra*, Earthquake Engineering Research Institute, 23(4), pp. 893–908.
Sheet Metal and Air Conditioning Contractors National Association (SMACNA). (2004). *Rectangular industrial duct construction standards*. Chantilly, VA.
Sheet Metal and Air Conditioning Contractors National Association (SMACNA). (2005). *HVAC duct construction standards—metal and flexible*. Chantilly, VA.
Shin, M., and LaFave, J. M. (2004). "Modeling of cyclic joint shear deformation contribution in RC beam-column connections to overall frame behavior." *Structural Engineering and Mechanics*, 18(5), 645–669.
Simsir, C. C., Ashheim, M. A., and Abrams, D. P. (2004). "Out-of-plane dynamic response of unreinforced masonry bearing walls attached to flexible diaphragms." *Proceedings of the 13th World Conference on Earthquake Engineering*. Vancouver, British Columbia, Canada.
Soong, T. T., and Constantinou, M. C. (1994). *Passive and active structural vibration control in civil engineering*, Springer-Verlag, Vienna, New York.
Sorrentino, L., Kunnath, S., Monti, G., and Scalora, G. (2008). "Seismically induced one-sided rocking response of unreinforced masonry façades." *Engineering Structures*, 30(8), 2140–2153.
Southern Building Code Congress International (SBCCI). (1999). "Standard building code." *SBC*, Birmingham, AL.
Sozen, M. A., and Moehle, J. P. (1993). "Stiffness of reinforced concrete walls resisting in-plane shear." Electric Power Research Institute, Research Project *3094-01*, Final Rep.
Standards New Zealand (SNZ). (2004). "Structural design actions—Part 5: Earthquake actions—New Zealand." *NZS 1170.5:2004*.
Stavridis. A. (2009). "Analytical and experimental study on seismic performanceassessment and retrofit techniques for masonry-infilled reinforced concrete frames." PhD Dissertation. University of California—San Diego.
Stavridis, A., and Shing, P. B. (2010)."Finite-element modeling of nonlinear behavior of masonry-infilled RC frames," *Journal of Structural Engineering*, 136(3), 285–296.
Steel Deck Institute (SDI). (2004). "Diaphragm design manual," *SDI manual*, 3rd Ed., Fox River Grove, IL.
Stewart, J. P., Bray, J. D., McMahon, D. J., Smith, P. M., and Kropp, A. L. (2001). "Seismic performance of hillside fills," *J. Geotech. & Geoenv. Engrg.*, ASCE, 127(11), 905–919.
Stewart, J. P., Whang, D. H., Moyneur, M., and Duku, P. (2004). "Seismic compression of as-compacted fill soils with variable levels of fines content and fines plasticity," *CUREE Publication No. EDA-05*, Consortium of Universities for Research in Earthquake Engineering, Richmond, CA, July.
Stoakes, C. D., and Fahnestock, L. A. (2010). "Cyclic flexural testing of concentrically-braced frame beam-column connections." *J. Struct. Eng.*, 137(7), 739–747.
Tall Building Initiative. (2010). "Guidelines for performance-based seismic design of tall buildings." Version 1.0. *Rep. No. PEER 2010/05*, Pacific Earthquake Engineering Research Center, Univ. of California, Berkeley, CA.
Timler, P. A. (2000). "Design evolution and state-of-the-art development of steel plate shear wall construction in North America." *Proc. of the 69th Annual SEAOC Convention*, pp. 197–208. Structural Engineers Association of California. Sacramento, California.
Timoshenko, S., and Woinowsky-Krieger, S. (1959). *Theory of plates and shells*, 2nd Ed., McGraw-Hill, New York.
Tissell, J. R. (1993). "Wood structural panel shear walls." *Research Rep. No. 154*, American Plywood Association, Tacoma, WA.
Tissell, J. R., and Elliott, J. R. (1997). "Plywood diaphragms." *Research Rep. No. 138*, American Plywood Association, Tacoma, WA.
Tokimatsu, K., and Seed, H. B. (1987). "Evaluation of settlements in sands due to earthquake shaking." *J. Geotech. Engrg.*, 113(8), 861–878.
Tsopelas, P., and Constantinou, M. C. (1994). "Experimental and analytical study of systems consisting of sliding bearings and fluid restoring force-damping devices." *Rep. No. NCEER 94-0010*, National Center for

Earthquake Engineering Research, State Univ. of New York at Buffalo, NY.

Tsopelas, P. C., Constantinou, M. C., and Reinhorn, A. M. (1994). "3D-BASIS-ME computer program for nonlinear dynamic analysis of seismically isolated single and multiple structures and liquid storage tanks." *Rep. No. NCEER-94-0014*, National Center for Earthquake Engineering Research, State Univ. of New York at Buffalo, NY.

Turnšek, V., and Sheppard, P. (1980). "The shear and flexural resistance of masonry walls," *Proceedings of the International Research Conference on Earthquake Engineering*, Skopje, Yugoslavia.

Updike, R. G., Egan, J. A., Moriwaki, Y., Idriss, I. M., and Moses, T. L. (1988). "A model for earthquake-induced translator landslides in Quaternary sediments." *Geological Society of America Bulletin*, 100, 783–792.

Uriz, P., and Mahin, S. A. (2008). "Toward earthquake-resistant design of concentrically braced steel-frame structures." *Rep. No. PEER 2008/08*, Pacific Earthquake Engineering Research Center, Univ. of California, Berkeley, CA.

U.S. Army Corps of Engineers. (1995). "Earthquake design and evaluation for civil works projects." ER 1110-2-1806, July 31.

U.S. Nuclear Regulatory Commission (USNRC). (1976). "Combining modal responses and spatial components in seismic response analysis." *Regulatory Guide 1.92*.

Vanderbilt, M. D., and Corley, W. G. (1983). "Frame analysis of concrete buildings." *Concrete International*, 5(12), 33–43.

Wallace, J. W. (1994). "New methodology for seismic design of RC shear walls." *J. Struct. Eng.*, 120(3), 863–884.

Wallace, J. W. (1995). "Seismic design of RC shear walls; Part I: new code format," *J. Struct. Eng.*, ASCE, 121(1), January 1995, 75–87.

Western Wood Products Association (WWPA). (1996). *Western woods use book*, Portland, OR.

Whitman. (1971). "Resistance of soil to liquefaction and settlement." *Soils and Foundations*, 11(4), 59–68.

Wijesundara, K. K., Rassathi, G. A., Nascimbene, R., and Bolognini, D. (2010). "Seismic performance of brace-beam-column connections in concentrically braced frames." *Structures Congress 2010*, S. Senapathi, K. Casey, and M. Hoit, eds. ASCE, Reston, VA.

Wilcoski, J., Gambill, J. B., and Smith, S. J. (1997). "The CERL equipment fragility and protection procedure (CEFAPP): Experimental definition of equipment vulnerability to transient support motions." USACERL *Technical Rep. 97/58*, ADA No. 342277, Construction Engineering Research Laboratories, U.S. Army Corps of Engineers, Champaign, IL.

Wilson, A., Quenneville, P., and Ingham, J. (2011). "Assessment of timber floor diaphragms in historic unreinforced masonry buildings." *Proc. of the International Conference on Structural Health Assessment of Timber Structures*, Lisbon, Portugal.

Wilson, E. L. (2010). *Static and dynamic analysis of structures*, Computers and Structures, Berkeley, CA.

Wire Reinforcement Institute (WRI). (2009). "Historical data on wire, triangular wire fabric/mesh and welded wire concrete reinforcement (WWR)." *TF 101-09*, Wire Reinforcement Institute, Hartford, CT.

Wood, S. L. (1990). "Shear strength of low-rise reinforced concrete walls." *ACI Struct. J.*, 87(1), 99–107.

Wright, P. D. (1989). "The development of a procedure and rig for testing the racking resistance of curtain wall glazing." *Study Rep. No. 17*, Building Research Association of New Zealand (BRANZ) Study Report No. 17; p. 18.

Xu, W., and Abrams, D. P. (1992). *Evaluation of lateral strength and deflection for cracked unreinforced masonry walls, Advanced construction technology center report #92-26-11*, College of Engineering, University of Illinois at Urbana, Illinois.

Yang, C.-S., Leon, R. T., and DesRoches, R. (2008). "Design and behavior of zipper-braced frames." *Engineering Structures*, 30, 1092–1100.

Yang, T. Y. (2006). "Performance evaluation of innovative steel braced frames." Dissertation, Dept. of Civil and Environmental Engineering, Univ. of California, Berkeley, CA.

Yang, Z., Elgamal, A., and Parra, E. (2003). "Computational model for cyclic mobility and associated shear deformation." *J. Geotech. Geoenviron. Eng.*, 129(12), 1119–1127.

Yi, T. (2004). "Experimental investigation and numerical simulation of an unreinforced masonry structure with flexible diaphragms." PhD Dissertation. Georgia Institute of Technology, Atlanta.

Yi, T., Moon, F. L., Leon, R. T., and Kahn, L. F. (2006a). "Analyses of a two-story unreinforced masonry building." *Journal of Structural Engineering*. ASCE. 132(5), 653–66.

Yi, T., Moon, F. L., Leon, R. T., and Kahn, L. F. (2006b). "Lateral load tests on a two-story unreinforced masonry building." *Journal of Structural Engineering*. ASCE. 132(5), 643–652.

Yi, T., Moon, F. L., Leon, R. T., and Kahn, L. F. (2008). "Flange effects on the nonlinear behavior of URM piers." *TMS Journal*. November 2008.

Yim, S. C-S., and Chopra, A. K. (1985). "Simplified earthquake analysis of multistory structures with foundation uplift." *J. Struct. Eng.*, 111(12), 2708–2731.

Yoo, J.-H. (2006). "Analytical investigation on the seismic performance of special concentrically braced frames." Dissertation, Dept. of Civil and Environmental Engineering, Univ. of Washington.

Yoo, J.-H., Roeder, C. W., and Lehman, D. E. (2008). "Analytical performance simulation of special concentrically braced frames." *J. Struct. Eng.*, 134(6), 881–889.

Yoo, J.-H., Roeder, C. W., and Lehman, D. E. (2009). "Simulated behavior of multi-story X-braced frames." *Engineering Structures*, 31, 182–197.

York, K., and Ryan, K. L. (2008). "Distribution of lateral forces in base-isolated buildings considering isolation system nonlinearity." *J. of Earthquake Engineering*, 12(7), 1185–1204.

Yoshimura, M., Takaine, Y., and Nakamura, T. (2004). "Axial collapse of reinforced concrete columns." *13th World Conference on Earthquake Engineering*, Paper No. 1699.

Youd, T. L., and Perkins, D. M. (1978). "Mapping liquefaction-induced ground failure potential," *J. Geotech. Engrg. Div.*, 104(4), 433–446.

Youd, T. L., et al. (2001). "Liquefaction resistance of soils: Summary report from the 1996 NCEER and 1998 NCEER/NSF workshops on evaluation of liquefaction resistance of soils." *J. Geotech. Geoenviron. Eng.*, 127(10), 817–833.

Youd, T., Hansen, C., and Bartlett, S. (2002). "Revised multilinear regression equations for prediction of lateral spread displacement." *J. Geotech. Geoenviron. Eng.*, 128(12), 1007–1017.

Zayas, V. A., Low, S. A., and Mahin, S. A. (1987). "The FPS earthquake resisting system experimental report." *Rep. No. UCB/EERC-87/1*, Earthquake Engineering Research Center, Univ. of California, Berkeley, CA.

Zhang, W., Huang, M., Zhang, Y., and Sun, Y. (2011). "Cyclic behavior studies on I-section inverted V-braces and their gusset plate connections." *J. Constr. Steel Res.*, 67(3), 407–420.

Zhang, G., Robertson, P. K., and Brachman, R. W. I. (2002). Estimating liquefaction induced ground settlements from CPT for level ground, *Canadian Geot. J.*, Ottawa, 39, 11681180.

Zhang, G., Robertson, P., and Brachman, R. (2004). "Estimating liquefaction-induced lateral displacements using the standard penetration test or cone penetration test." *J. Geotech. Geoenviron. Eng.*, 130(8), 861–871.

This page intentionally left blank

APPENDIX A
GUIDELINES FOR DEFICIENCY-BASED PROCEDURES

A.1 GENERAL

This appendix chapter provides commentary to the checklists used for the Tier 1 screening in Chapter 4. This commentary, which is referenced from the checklists contained in Chapter 16, includes each checklist statement, followed by commentary on the potential deficiency represented by the checklist statement and considerations for mitigation of the deficiency. This checklist commentary can also be used for guidance in the further evaluation and potential retrofit of identified deficiencies using the Tier 2 deficiency-based evaluation and retrofit procedures in Chapter 5. Additional commentary on the specific requirements for the Tier 2 analysis procedures is provided in Chapter 5.

The appendix is organized as follows:

- A. 1 General;
- A. 2 Procedures for Building Systems;
- A. 3 Procedures for Seismic-Force-Resisting Systems;
- A. 4 Procedures for Diaphragms;
- A. 5 Procedures for Connections;
- A. 6 Procedures for Geologic Site Hazards and Foundations; and
- A. 7 Procedures for Nonstructural Components.

A.2 PROCEDURES FOR BUILDING SYSTEMS

This section provides guidelines for using the Tier 1 building systems checklists and the Tier 2 deficiency-based evaluation and rehabilitation procedures for all building systems: general, configuration, and condition of the materials.

A.2.1 General

A.2.1.1 LOAD PATH: The structure contains a complete, well-defined load path, including structural elements and connections, that serves to transfer the inertial forces associated with the mass of all elements to the foundation. There must be a complete seismic-force-resisting system that forms a continuous load path between the foundation, all diaphragm levels, and all portions of the building for proper seismic performance. The general load path is as follows: seismic forces originating throughout the building are delivered through structural connections to horizontal diaphragms; the diaphragms distribute these forces to the vertical elements of the seismic-force-resisting system, such as shear walls and frames; the vertical elements transfer the forces into the foundation; and the foundation transfers the forces into the supporting soil. Compliance with this statement indicates only the existence of a complete load path and that all elements and connections within the load path appear to be detailed for transferring seismic forces. The adequacy of the load path is checked in subsequent statements.

If there is a discontinuity in the load path, the building is unable to resist seismic forces regardless of the strength of the existing elements. Mitigation with elements or connections needed to complete the load path is necessary to achieve the selected Performance Level. The design professional should be watchful for gaps in the load path. Examples would include a shear wall that does not extend to the foundation, a missing shear transfer connection between a diaphragm and vertical element, a discontinuous chord at a diaphragm notch, or a missing collector.

In cases where there is a structural discontinuity, a load path may exist, but it may be a very undesirable one. At discontinuous shear walls, for example, the diaphragm may transfer the forces to frames not intended to be part of the seismic-force-resisting system. Though not ideal, the load path is compliant, and it may be possible to show that the load path is acceptable. Another compliant load path that may be undesirable is where seismic forces are transferred between seismic-force-resisting elements through friction.

Load path discontinuities can be mitigated by adding components to complete the load path. This method may require adding new, well founded shear walls or frames to fill gaps in existing shear walls or frames that are not carried continuously to the foundation. Alternatively, it may require the addition of components throughout the building to pick up forces from diaphragms that have no path into existing vertical elements.

A.2.1.2 ADJACENT BUILDINGS: The clear distance between the building being evaluated and any adjacent building is greater than 4% of the height of the shorter building. this statement shall not apply for the following building types: W1, W1a, and W2. Buildings are often built right up to property lines to make maximum use of space, and historically buildings have been designed as if the adjacent buildings do not exist. As a result, the buildings may impact each other, or pound, during an earthquake. Building pounding can alter the dynamic response of both buildings and impart additional inertial forces on both structures.

Where one or both buildings have setbacks, the minimum separation should be evaluated based on the common height between the two buildings. Above the level of the setback, the separation should be evaluated based on the total height of the shorter building.

Buildings that are the same height and have matching floors exhibit similar dynamic behavior. If the buildings pound, floors impact other floors, so damage caused by pounding is usually limited to nonstructural components. Where the floors of adjacent buildings are at different elevations, floors impact the columns of the adjacent building and can cause structural damage (Fig. A-1). Where the buildings are of different heights, the shorter building can act as a buttress for the taller building. The shorter building receives an unexpected load, and the taller building suffers from a major stiffness discontinuity that alters

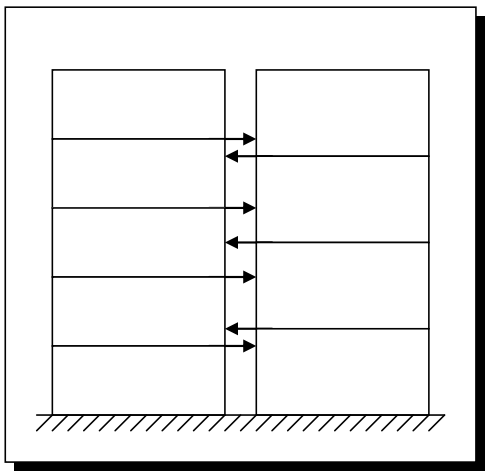

FIG. A-1. Unmatching Floors

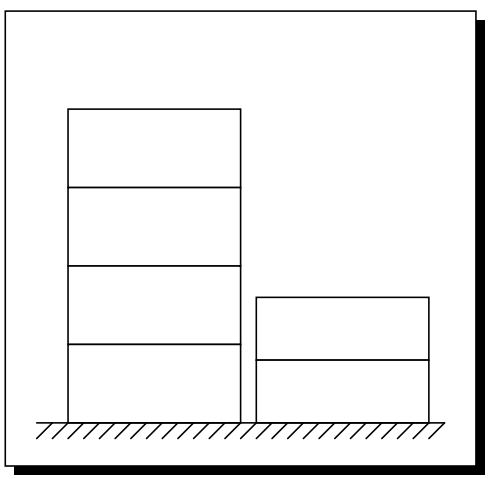

FIG. A-2. Buildings of Different Heights

its dynamic response (Fig. A-2). Because neither building is necessarily designed for these conditions, there is a potential for extensive damage and possible collapse.

Many buildings that are built tight to each other appear to survive earthquakes by acting as a solid block. However, the end buildings of the block may have pronounced pounding. An example of this condition was the downtown area of San Francisco during the Loma Prieta earthquake. End of block buildings with unmatching floors have the greatest life safety concern.

Noncompliant separations must be checked using calculated drifts for both buildings. The square root sum of squares (SSRS) combination is used because of the low probability that maximum drifts in both buildings will occur simultaneously and out of phase. Where information on the adjacent building is not available, conservative estimates for drift should be made in the evaluation.

The potential hazard of the adjacent building also must be evaluated. If a neighbor is a potential collapse hazard, this fact must be reported.

Stiffening elements (typically braced frames or shear walls) can be added to one or both buildings to reduce the expected drifts to acceptable levels. With separate structures in a single building complex, it may be possible to tie them together structurally to force them to respond as a single structure. The relative stiffnesses of each and the resulting force interactions must be determined to ensure that additional deficiencies are not created. Pounding can also be eliminated by demolishing a portion of one building to increase the separation.

A.2.1.3 MEZZANINES: Interior mezzanine levels are braced independently from the main structure or are anchored to the seismic-force-resisting elements of the main structure. It is common for mezzanines to lack a well defined seismic-force-resisting system. Often, mezzanines are added on by the building owner after the original construction of the building. Mezzanines may be partially attached to the structural framing of the main building, in which case the lateral bracing for the mezzanine may partially rely on the building's seismic-force-resisting system and may require additional lateral bracing. Unbraced mezzanines can be a potential collapse hazard and should be checked for stability.

Seismic-force-resisting elements must be present in both directions to provide bracing. Where the mezzanine is attached to the main structure, the supporting elements of the main structure should be evaluated, considering both the magnitude and location of the additional forces imparted by the mezzanine.

If the load path is incomplete or nonexistent, mitigation with elements or connections needed to complete the load path is necessary to achieve the selected Performance Level.

Diagonal braces, moment frames, or shear walls can be added at or near the perimeter of the mezzanine where bracing elements are missing to provide a complete and balanced seismic-force-resisting system that meets the requirements of this standard.

A.2.2 Configuration

A.2.2.1 General Good details and construction quality are of secondary value if a building has an odd shape that was not properly considered in the design. Although a building with an irregular configuration may be designed to meet all code requirements, irregular buildings generally do not perform as well as regular buildings in an earthquake. Typical building configuration deficiencies include an irregular geometry, a weakness in a given story, a concentration of mass, or a discontinuity in the seismic-force-resisting system.

Vertical irregularities are defined in terms of strength, stiffness, geometry, and mass. These quantities are evaluated separately, but they are related and may occur simultaneously. For example, the frame in Fig. A-3 has a tall first story. It can be a weak story, a soft story, or both, depending on the relative strength and stiffness of this story and the stories above.

One of the basic goals in the design of a building is efficient use of materials such that all members are stressed about equally. In seismic design, this goal is modified so that stresses within groups of members are about the same. For example, in moment frames (as discussed in Section A.3.1) it is desirable to have the beams weaker than the columns but to have all of the beams at the same stress level. In such a design, the members yield at about the same level of seismic forces; there is no single weak link. Code provisions regarding vertical irregularities are intended to achieve this result. Significant irregularities that would cause damage to be concentrated in certain areas require special treatment.

Horizontal irregularities involve the horizontal distribution of seismic forces to the resisting frames or shear walls. Irregularities in the shape of the diaphragm itself (i.e., diaphragms that are L-shaped or have notches) are discussed in Section A.4.

New vertical seismic-force-resisting elements can be provided to eliminate the vertical irregularity. For weak stories, soft

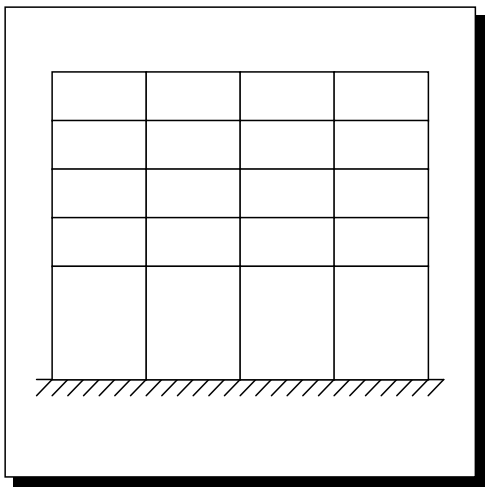

FIG. A-3. Tall Story

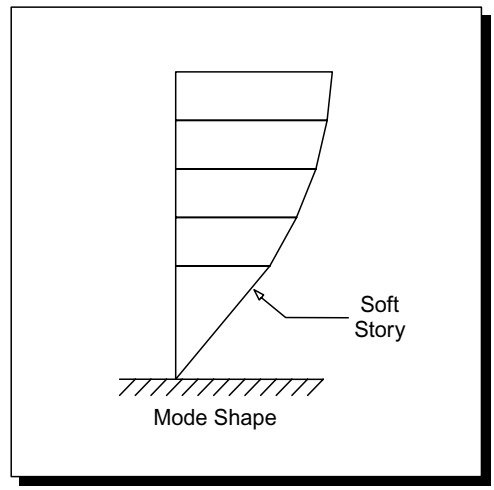

FIG. A-4. Soft Story

stories, and vertical discontinuities, new elements of the same type can be added as needed.

The effects of plan irregularities that create torsion can be eliminated with the addition of seismic-force-resisting bracing elements that support all major diaphragm segments in a balanced manner. Although it is possible in some cases to allow the irregularity to remain and instead strengthen those structural components that are overstressed by its existence, this provision does not directly address the problem and requires the use of the Tier 3 systematic retrofit procedure.

A.2.2.2 WEAK STORY: The sum of the shear strengths of the seismic-force-resisting system in any story in each direction is not less than 80% of the strength in the adjacent story above. The story strength is the total strength of all the seismic-force-resisting elements in a given story for the direction under consideration. It is the shear capacity of columns or shear walls or the horizontal component of the capacity of diagonal braces. If the columns are flexure controlled, the shear strength is the shear corresponding to the flexural strength. Weak stories are usually found where vertical discontinuities exist or where member size or reinforcement has been reduced. It is necessary to calculate the story strengths and compare them. The result of a weak story is a concentration of inelastic activity that may result in the partial or total collapse of the story.

Generally an examination of the building elevations can determine if a weak story exists without the need for calculation. A reduction in the number or length of seismic-force-resisting elements or a change in the type of seismic-force-resisting system is an obvious indication that a weak story might exist. A gradual reduction of seismic-force-resisting elements as the building increases in height is typical and is not considered a weak story condition.

A dynamic analysis should be performed to determine if there are unexpectedly high seismic demands at locations of strength discontinuities. Compliance can be achieved if the elements of the weak story can be shown to have adequate capacity near elastic levels.

A.2.2.3 SOFT STORY: The stiffness of the seismic-force-resisting system in any story is not less than 70% of the seismic-force-resisting system stiffness in an adjacent story above or less than 80% of the average seismic-force-resisting system stiffness of the three stories above. This condition commonly occurs in commercial buildings with open fronts at ground-floor storefronts and hotels or office buildings with particularly tall first stories. Fig. A-3 shows an example of a tall story. Such cases are not necessarily soft stories because the tall columns may have been designed with appropriate stiffness, but they are likely to be soft stories if they have been designed without consideration for story drift. Soft stories usually are revealed by an abrupt change in story drift. Generally an examination of the building elevations can determine if a soft story exists without the need for calculation. A tall story or a change in the type of seismic-force-resisting system is an obvious indication that a soft story might exist. A gradual reduction of seismic-force-resisting elements as the building increases in height is typical and is not considered a soft story condition. Another simple first step might be to plot and compare the story drifts, as indicated in Fig. A-4, if analysis results happen to be available.

The difference between "soft" and "weak" stories is the difference between stiffness and strength. A column may be limber but strong or stiff but weak. A change in column size can affect strength and stiffness, and both need to be considered.

A dynamic analysis should be performed to determine if there are unexpectedly high seismic demands at locations of stiffness discontinuities.

A.2.2.4 VERTICAL IRREGULARITIES: All vertical elements in the seismic-force-resisting system are continuous to the foundation. Vertical discontinuities are usually detected by visual observation. The most common example is a discontinuous shear wall or braced frame. The element is not continuous to the foundation; rather, it stops at an upper level. The shear at this level is transferred through the diaphragm to other resisting elements below. This force transfer can be accomplished through a strut if the elements are on the same plane (Fig. A-5) or through a connecting diaphragm if the elements are not in the same plane (Fig. A-6). In either case, the overturning forces that develop in the element continue down through the supporting columns.

This issue is a local strength and ductility problem below the discontinuous elements, not a global story strength or stiffness irregularity. The concern is that the wall or braced frame may have more shear capacity than was considered in the design. These capacities impose overturning forces that could overwhelm the columns. Although the strut or connecting diaphragm may be adequate to transfer the shear forces to adjacent elements, the columns that support vertical loads are the most

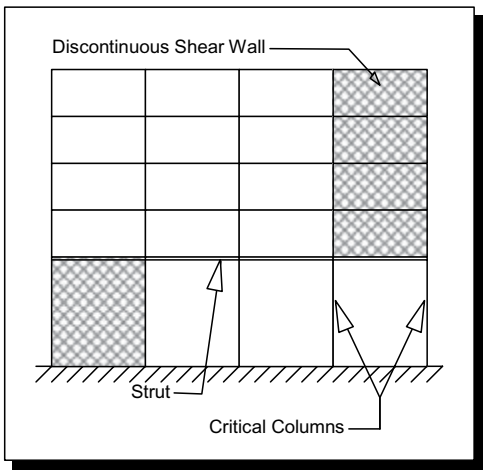

FIG. A-5. Vertical Discontinuity In Plane

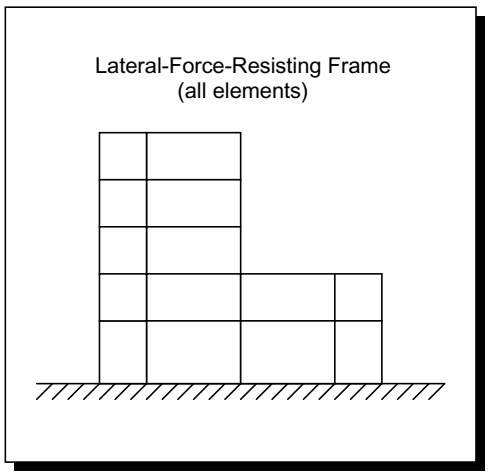

FIG. A-7. Geometric Irregularities

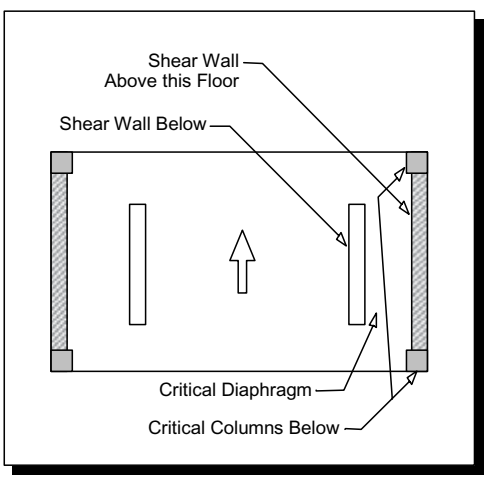

FIG. A-6. Vertical Discontinuity Out of Plane

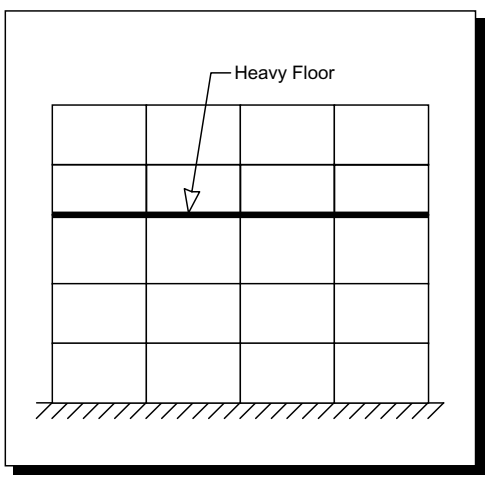

FIG. A-8. Heavy Floor

critical. It should be noted that moment frames can have the same kind of discontinuity.

Compliance can be achieved if an adequate load path exists to transfer seismic force and if the supporting columns can be demonstrated to have adequate capacity to resist the overturning forces generated by the shear capacity of the discontinuous elements.

A.2.2.5 GEOMETRY: There are no changes in horizontal dimension of the seismic-force-resisting system of more than 30% in a story relative to adjacent stories, excluding one-story penthouses and mezzanines. Geometric irregularities are usually detected in an examination of the story-to-story variation in the dimensions of the seismic-force-resisting system (Fig. A-7). A building with upper stories set back from a broader base structure is a common example. Another example is a story in a high-rise that is set back for architectural reasons. It should be noted that the irregularity of concern is in the dimensions of the seismic-force-resisting system, not in the dimensions of the envelope of the building, and, as such, it may not be obvious.

Geometric irregularities affect the dynamic response of the structure and may lead to unexpected higher mode effects and concentrations of demand. A dynamic analysis should be performed to more accurately calculate the distribution of seismic forces. One-story penthouses need not be considered except for the added mass.

A.2.2.6 MASS: There is no change in effective mass more than 50% from one story to the next. light roofs, penthouses, and mezzanines need not be considered. Mass irregularities can be detected by comparison of the story weights (Fig. A-8). The effective mass consists of the dead load of the structure tributary to each level, plus the actual weights of partitions and permanent equipment at each floor. Buildings are typically designed for primary mode effects. The validity of this approximation is dependent on the vertical distribution of mass and the stiffness in the building. Mass irregularities affect the dynamic response of the structure and may lead to unexpected higher mode effects and concentrations of demand.

A dynamic analysis should be performed to more accurately calculate the distribution of seismic forces. Light roofs and penthouses need not be considered.

A.2.2.7 TORSION: The estimated distance between the story center of mass and the story center of rigidity is less than 20% of the building width in either plan dimension. Wherever there is significant torsion in a building, the concern is for additional seismic demands and lateral drifts

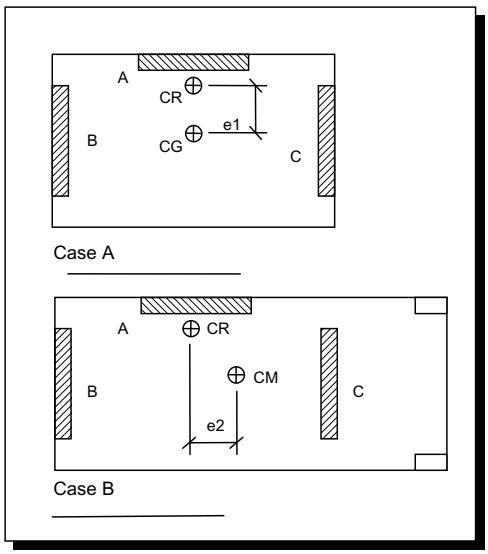

FIG. A-9. Torsion: Cases A and B

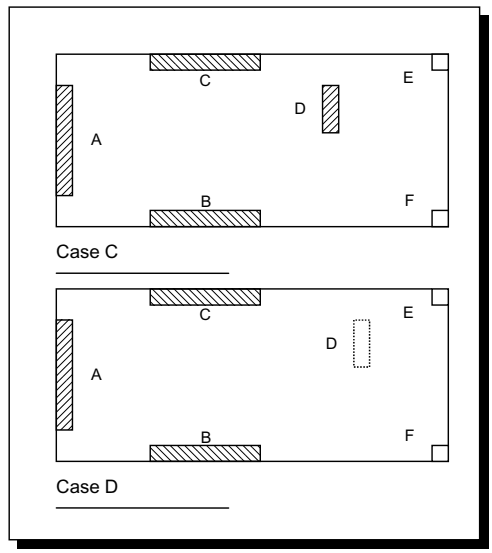

FIG. A-10. Torsion: Cases C and D

imposed on the vertical elements by rotation of the diaphragm. Buildings can be designed to meet code forces, including torsion, but buildings with severe torsion are less likely to perform well in earthquakes. It is best to provide a balanced system at the start, rather than design torsion into the system.

One concern is for columns that support the diaphragm, especially if the columns are not intended to be part of the seismic-force-resisting system. The columns are forced to drift laterally with the diaphragm, inducing lateral forces and P-Δ effects. Such columns often have not been designed to resist these movements.

Another concern is the strength of the vertical elements of the seismic-force-resisting system that might experience additional seismic demands caused by torsion.

In the Case A building shown in Fig. A-9, the center of gravity is near the center of the diaphragm, while the center of rigidity is also near the centerline but close to wall A. Under longitudinal loading, the eccentricity, $e1$, between the center of gravity (center of the applied seismic force) and the center of rigidity (center of resistance) causes a torsional moment. The entire seismic force is resisted directly by wall A, and the torsional moment is resisted by a couple consisting of equal and opposite forces in walls B and C. These two walls have displacements in opposite directions, and the diaphragm rotates.

These are simple cases for analysis and design, and if the systems are designed and detailed properly, they should perform well. With the ample portions suggested by the length of the walls in Fig. A-9, stresses are low and there is little rotation of the diaphragm. The hazard appears where the diaphragm, and consequently, the diaphragm stresses, become large; where the stiffness of the walls is reduced; or where the walls have substantial differences in stiffnesses.

The Case C building, shown in Fig. A-10, has a more serious torsional condition than the ones in Fig. A-9. Wall A has much greater rigidity than wall D, as indicated by their relative lengths.

For transverse loading, the center of rigidity is close to wall A, and there is a significant torsional movement. Walls B, C, and D, although strong enough for design forces, have little rigidity, and that allows substantial rotation of the diaphragm. There are two concerns here. First, because of the rotation of the diaphragm, there is a displacement at E and F that induces sidesway moments in the columns that may not have been recognized in the design. Their failure could lead to a collapse. Second, the stability of the building under transverse loading depends on wall D. The Case D building shown in Fig. A-10 is shown with wall D failed. The remaining walls, A, B, and C, are in Fig. A-9, and now there is a very large eccentricity that may cause walls B and C to fail. This is also an example of a building that lacks redundancy.

A.2.3 Condition of Materials Deteriorated structural materials may jeopardize the capacity of the vertical- and lateral-force-resisting systems. The most common type of deterioration is caused by the intrusion of water. Stains may be a clue to water-caused deterioration where the structure is visible on the exterior, but the deterioration may be hidden where the structure is concealed by finishes. In the latter case, the design professional may have to find a way into attics, plenums, and crawl spaces to assess the structural systems and their condition.

The design professional should be careful when dealing with a building that appears to be in good condition and is known to have been subjected to earthquakes in the past. One is tempted to say that the building has "withstood the test of time"; however, the earthquakes the building was subjected to may not have been significant, or the good appearance may only be a good cosmetic repair that hides damage that was not repaired. Examples of problems include cracked concrete walls and frames, torn steel connections, bent fasteners or torn plywood in diaphragms and walls, and loose anchors in masonry. Evaluations should include consideration of long-term impacts, especially if deterioration is currently minor and repair to the source of deterioration is not completed in a timely manner.

A.2.3.1 FOUNDATION PERFORMANCE: There is no evidence of excessive foundation movement such as settlement or heave that would affect the integrity or strength of the structure. The integrity and strength of foundation elements may be reduced by cracking, yielding, tipping, or buckling of the foundation. Such weakening may be critical in the event of an earthquake.

Lower level walls, partitions, grade beams, visible footings, pile caps, and similar elements shall be visually examined for cracking, yielding, buckling, and out-of-level conditions. Any such signs should be identified and further evaluated.

A.2.3.2 DETERIORATION OF FOUNDATION ELEMENTS: There is no evidence that foundation elements have deteriorated because of corrosion, sulfate attack, material breakdown, or other reasons in a manner that would affect the integrity or strength of the structure. Deterioration can cause weakening of the foundation elements, limiting their ability to support the building. Historical records of foundation performance in the local area may help assess the possibility of deterioration in the foundation of the building being evaluated.

A.2.3.3 DETERIORATION OF WOOD: There are no signs of decay, shrinkage, splitting, fire damage, or sagging in any of the wood members; none of the metal connection hardware is deteriorated, broken, or loose. The condition of the wood in a structure has a direct relationship to its performance in a seismic event. Wood that is split, rotten, or has insect damage may have a very low capacity to resist forces imposed by earthquakes. Structures with wood elements depend to a large extent on the connections between members. If the wood at a bolted connection is split, the connection possesses only a fraction of the capacity of a similar connection in undamaged wood. Limited intrusive investigation may be required to determine the cause and relative magnitude of the damage.

A.2.3.4 WOOD STRUCTURAL PANEL SHEAR WALL FASTENERS: There is no inadequate fastening such as overdriven fasteners, omitted blocking, excessive fastening spacing, or inadequate edge distance. Fasteners connecting structural panels to the framing are supposed to be driven flush with but should not penetrate the surface of the sheathing. Overdriven fasteners effectively reduce the shear capacity of the fastener and increase the potential for the fastener to fail by pulling through the sheathing.

For structures built before the wide use of nailing guns (pre-1970), the problem is generally not present. More recent projects are often constructed with alternate fasteners, such as staples, T-nails, clipped head nails, or cooler nails, which, where installed with pneumatic nail guns, are often overdriven, completely penetrating one or more panel plies.

Other issues regarding fasteners that could reduce the capacity of shear wall include omitted blocking, excessive fastening spacing, and inadequate edge distance.

A.2.3.5 DETERIORATION OF STEEL: There is no visible rusting, corrosion, cracking, or other deterioration in any of the steel elements or connections in the vertical- or lateral-force-resisting systems. Environmental effects over prolonged periods of time may lead to deterioration of steel elements. Significant rusting or corrosion can substantially reduce the member cross sections, with a corresponding reduction in capacity.

Often steel elements have surface corrosion that looks worse than it is and is likely not a concern. Where corrosion is present, care should be taken to determine the actual loss in cross section. Such deterioration must be considered in the evaluation where it occurs at critical locations in the lateral-force-resisting system.

A.2.3.6 DETERIORATION OF CONCRETE: There is no visible deterioration of concrete or reinforcing steel in any of the vertical- or lateral-force-resisting elements. Deteriorated concrete and reinforcing steel can significantly reduce the strength of concrete elements. This statement is concerned with deterioration such as spalled concrete associated with rebar corrosion and water intrusion. Cracks in concrete are covered elsewhere in this standard. Spalled concrete over reinforcing bars reduces the available surface for bond between the concrete and steel. Bar corrosion may significantly reduce the cross section of the bar.

Deterioration is a concern where the concrete cover has begun to spall and there is evidence of rusting at critical locations.

A.2.3.7 CONCRETE WALL CRACKS: All existing diagonal cracks in the wall elements are less than 1/16 in., are not concentrated in one location, and do not form an x pattern. Cracks in concrete elements have little effect on the strength of well reinforced wall elements. A significant reduction in strength is usually the result of large displacements or crushing of concrete. Only where the cracks are large enough to prevent aggregate interlock or to allow for the potential for buckling of the reinforcing steel does the adequacy of the concrete capacity become a concern.

Cracks in unusual patterns, such as concentrated on one floor or at one end of the wall, usually indicate a specific cause. The cause of observed cracking needs to be identified to determine whether future cracking will affect the capacity of the wall.

Crack width is commonly used as a convenient indicator of damage to a wall. However, it should be noted that some studies, such as FEMA 306 and 307 (1998b and 1998c), list other factors, such as location, orientation, number, distribution, and pattern of the cracks, to be equally important in measuring the extent of damage present in the shear walls. All these factors should be considered where evaluating the reduced capacity of a cracked element.

A.2.3.8 CRACKS IN INFILL BOUNDARY COLUMNS: There are no existing diagonal cracks wider than 1/16 in. in concrete columns that encase masonry infills. Small cracks in concrete elements have little effect on strength. A significant reduction in strength is usually the result of large displacements or crushing of concrete. Only where the cracks are large enough to prevent aggregate interlock or to allow for the potential for buckling of the reinforcing steel does the adequacy of the concrete element capacity become a concern.

Columns are required to resist diagonal compression strut forces that develop in infill wall panels. Vertical components induce axial forces in the columns. The eccentricity between horizontal components and the beams is resisted by the columns. Extensive cracking in the columns may indicate locations of possible weakness. Such columns may not be able to function in conjunction with the infill panel as expected.

A.2.3.9 UNREINFORCED MASONRY UNITS: There is no visible deterioration of unreinforced masonry units. Deteriorated or poor-quality unreinforced masonry elements can result in significant reductions in the strength of structural elements. Damaged or deteriorated masonry may not be readily observable.

A.2.3.10 UNREINFORCED MASONRY JOINTS: The mortar cannot be easily scraped away from the joints by hand with a metal tool, and there are no areas of eroded mortar. Older buildings constructed with lime mortar may have surface repointing but still have deteriorated mortar in the main part of the joint. One test is to tap a small hole with a nail in the repointing and, if it breaks through, powdery lime mortar shows on the nail. If it does not break through after moderate-to-hard blows, the wall probably is repointed full depth. Deteriorated mortar can also be seen by looking behind exterior trim or wall fixtures where the new repointing never reached. Mortar that is severely eroded or can be easily scraped away has been found to have low shear strength, which results in low wall strength. Destructive or in-plane shear tests, such as those referenced in

Chapter 11, are required to measure strength of the bond between the brick and mortar to determine the shear capacity of the walls.

A.2.3.11 UNREINFORCED MASONRY WALL CRACKS: There are no existing diagonal cracks in the wall elements greater than 1/16 in. or out-of-plane offsets in the bed joint greater than 1/16 in., and they do not form an X pattern. Diagonal wall cracks, especially along the masonry joints, may affect the interaction of the masonry units, leading to a reduction of strength and stiffness. The cracks may indicate distress in the wall from past seismic events, foundation settlement, or other causes.

Crack width is commonly used as a convenient indicator of damage to a wall, but it should be noted that studies, such as FEMA 306 and 307 (1998b and 1998c), list other factors, such as location, orientation, number, distribution, and pattern of the cracks, to be equally important in measuring the extent of damage present in the shear walls. All these factors should be considered where evaluating the reduced capacity of a cracked element.

A.2.3.12 INFILL MASONRY WALL CRACKS: There are no existing diagonal cracks in the infilled walls that extend throughout a panel greater than 1/16 in. or out-of-plane offsets in the bed joint greater than 1/16 in. Diagonal wall cracks, especially along the masonry joints, may affect the interaction of the masonry units, leading to a reduction of strength and stiffness. The cracks may indicate distress in the wall from past seismic events, foundation settlement, or other causes.

Offsets in the bed joint along the masonry joints may affect the interaction of the masonry units in resisting out-of-plane forces. The offsets may indicate distress in the wall from past seismic events or just poor construction.

Crack width is commonly used as a convenient indicator of damage to a wall, but it should be noted that some studies (FEMA 306 [1998b] and 307 [1998c]) list other factors, such as location, orientation, number, distribution, and pattern of the cracks, to be equally important in measuring the extent of damage present in the shear walls. All these factors should be considered where evaluating the reduced capacity of a cracked element.

A.2.3.13 POSTTENSIONING ANCHORS: There is no evidence of corrosion or spalling in the vicinity of posttensioning or end fittings. Coil anchors have not been used. Corrosion in posttensioning anchors can lead to failure of the gravity load system if ground motion causes a release or slip of prestressing strands. Coil anchors (Fig. A-11), with or without corrosion, have performed poorly under cyclic forces and are no longer allowed by current standards. The deficiency is the ability of the coil anchor to maintain its grip under cyclic loading. There is no Tier 2 procedure for coil anchors.

A.2.3.14 PRECAST CONCRETE WALLS: There is no visible deterioration of concrete or reinforcing steel or evidence of distress, especially at the connections. Precast concrete elements are sometimes only nominally interconnected and may be subject to shrinkage, creep, or temperature stresses that were not adequately considered in design. Distress caused by these factors could directly affect the lateral strength of the building. The most common damage is cracking and spalling at embedded connections between panels. This damage includes both the nominal connections along the vertical edges and the chord connections at the level of the diaphragm. The performance of precast concrete wall systems is completely dependent on the condition of the connections.

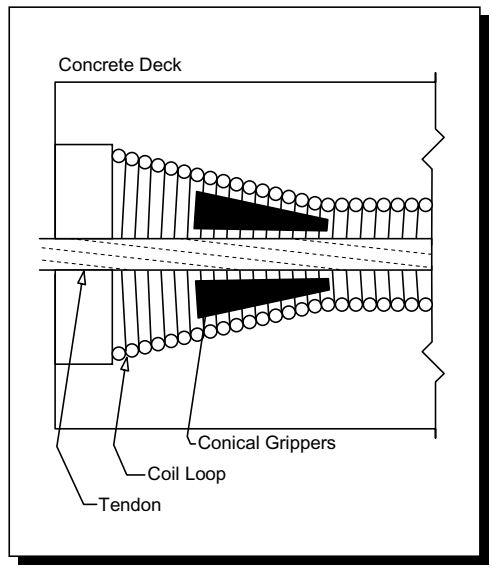

FIG. A-11. Coil Anchor

A.2.3.15 REINFORCED MASONRY WALL CRACKS: All existing diagonal cracks in the wall elements are less than 1/16 in., are not concentrated in one location, and do not form an X pattern. Diagonal wall cracks, especially along the masonry joints, may affect the interaction of the masonry units, leading to a reduction of strength and stiffness. The cracks may indicate distress in the wall from past seismic events, foundation settlement, or other causes.

Cracks in unusual patterns, such as concentrated on one floor or at one end of the wall, usually indicate a specific cause. The cause of observed cracking needs to be identified to determine whether future cracking will affect the capacity of the wall.

Crack width is commonly used as a convenient indicator of damage to a wall. However, it should be noted that some studies (FEMA 306 [1998b] and 307 [1998c]) list other factors, such as location, orientation, number, distribution, and pattern of the cracks, to be equally important in measuring the extent of damage present in the shear walls. All these factors should be considered where evaluating the reduced capacity of a cracked element.

A.3 PROCEDURES FOR SEISMIC-FORCE-RESISTING SYSTEMS

This section provides guidelines for using the Tier 1 checklists and the Tier 2 deficiency-based evaluation and retrofit guidelines that apply to seismic-force-resisting systems: moment frames, shear walls, and braced frames.

A.3.1 Moment Frames Moment frames develop their resistance to forces primarily through the flexural strength of the beam and column elements.

In an earthquake, a frame with suitable proportions and details can develop plastic hinges that absorb energy and allow the frame to survive actual displacements that are larger than calculated in an elastic-based design.

In "special" moment frames, the ends of beams and columns, being the locations of maximum seismic moment, are designed to sustain inelastic behavior associated with plastic hinging over many cycles and load reversals.

Frames without special seismic detailing depend on the reserve strength inherent in the design of the members. The basis

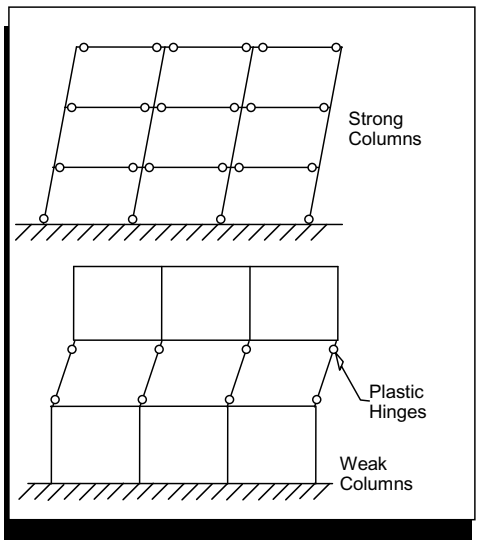

FIG. A-12. Plastic Hinge Formation

of this reserve strength is the load factors in strength design or the factors of safety in working-stress design. Such frames are called "ordinary" moment frames. For ordinary moment frames, failure usually occurs because of a sudden brittle mechanism, such as shear failure in concrete members.

For evaluations using this standard, it is not necessary to determine the type of frame (e.g., "special") in the building. The performance issue is addressed by appropriate acceptance criteria in the specified procedures. The fundamental requirements for all ductile moment frames are the following:

- They should have sufficient strength to resist seismic demands,
- They should have sufficient stiffness to limit interstory drift,
- Beam–column joints should have the shear capacity to resist the shear demand and to develop the strength of the connected members,
- Elements should be able to form plastic hinges that have the ductility to sustain the rotations to which they are subjected, and
- Beams should develop hinges before the columns at locations distributed throughout the structure (the strong column–weak beam concept).

These items are covered in more detail in the evaluation statements that follow.

The combined action of gravity loads and seismic forces are expected to cause the formation of plastic hinges in the structure. However, a concentration of plastic hinge formation at undesirable locations can severely undermine the stability of the structure. For example, the lower sketch in Fig. A-12 shows a story mechanism in which hinges form at the tops and bottoms of all the columns in a particular story. This condition results in a concentration of ductility demand and displacement in a single story that can lead to collapse.

In a strong column situation (see upper sketch, Fig. A-12), the beams hinge first, yielding is distributed throughout the structure, and the ductility demand is more dispersed.

A.3.1.1 General

A.3.1.1.1 REDUNDANCY: The number of lines of moment frames in each direction is greater than or equal to 2. The number of bays of moment frames in each line is greater than or equal to 2 for life safety and 3 for immediate occupancy. Redundancy is a fundamental characteristic of seismic-force-resisting systems with superior seismic performance. Redundancy in the structure ensures that if an element in the seismic-force-resisting system fails for any reason, there is another element present that can provide seismic force resistance. Redundancy also provides multiple locations for potential yielding, distributing inelastic activity throughout the structure and improving ductility and energy absorption. Typical characteristics of redundancy include multiple lines of resistance to distribute the seismic forces uniformly throughout the structure and multiple bays in each line of resistance to reduce the shear and axial demands on any one element (Fig. A-13).

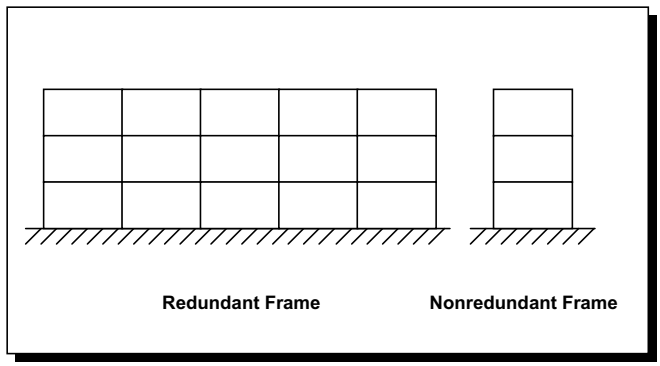

FIG. A-13. Redundancy Along a Line of Moment Frame

A distinction should be made between redundancy and adequacy. For the purpose of this standard, redundancy is intended to mean simply "more than one." That is not to say that for large buildings two elements is adequate, or for small buildings one is not enough. Separate evaluation statements are present in the standard to determine the adequacy of the elements provided.

Where redundancy is not present in the structure, an analysis that demonstrates the adequacy of the seismic-force-resisting elements is required.

The most prudent retrofit strategy for a building without redundancy is to add new seismic-force-resisting elements in locations where the failure of a few components would cause an instability in the building. The added seismic-force-resisting elements should be of the same stiffness as the elements they are supplementing. It is not generally satisfactory just to strengthen a nonredundant element (such as by adding cover plates to a slender brace) because its failure would still result in an instability.

A.3.1.2 Moment Frames with Infill Walls Infill walls used for partitions, cladding, or shaft walls that enclose stairs and elevators should be isolated from the frames. If not isolated, they alter the response of the frames and change the behavior of the entire structural system. Lateral drifts of the frame induce forces on walls that interfere with this movement. Cladding connections must allow for this relative movement. Stiff infill walls confined by the frame develop compression struts that impart forces to the frame and cause damage to the walls. This phenomenon is particularly important around stairs or other means of egress from the building.

A.3.1.2.1 INTERFERING WALLS: All concrete and masonry infill walls placed in moment frames are isolated from structural elements. Where an infill wall interferes with the moment frame, the wall becomes an unintended part of the seismic-force-resisting system. Typically these walls are not designed and

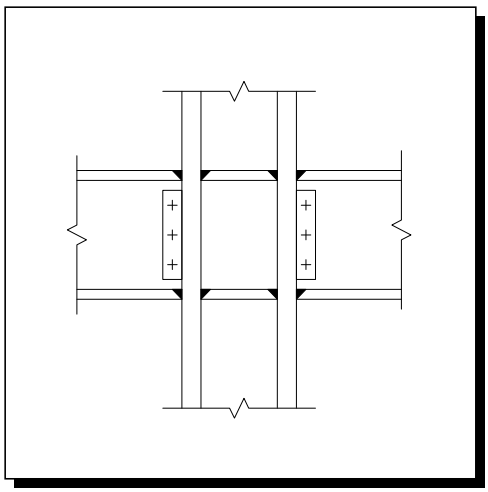

FIG. A-14. Pre–Northridge-Type Connection

detailed to participate in the seismic-force-resisting system, and they may be subject to significant damage. The amount of isolation must be able to accommodate the interstory drift of the moment frame.

Interfering walls should be checked for forces induced by the frame, particularly where damage to these walls can lead to falling hazards near means of egress. The frames should be checked for forces induced by contact with the walls, particularly if the walls are not full height or do not completely fill the bay.

It should be noted that it is impossible to simultaneously satisfy this section and Section A.3.2.6.1, which covers infill walls that are intended to be part of the seismic-force-resisting system.

A.3.1.3 Steel Moment Frames The following are characteristics of steel moment frames that have demonstrated acceptable seismic performance:

1. The beam end connections develop the plastic moment capacity of the beam or panel zone.
2. There is a high level of redundancy in the number of moment connections.
3. The column web has sufficient strength to sustain the stresses in the beam–column joint.
4. The lower flanges have lateral bracing sufficient to maintain stability of the frame.
5. There is flange continuity through the column.

Before the 1994 Northridge earthquake, steel moment frame connections generally consisted of complete penetration flange welds and a bolted or welded shear tab connection at the web (Fig. A-14). This type of connection, which was an industry standard from 1970 to 1995, was thought to be ductile and capable of developing the full capacity of the beam sections. However, a large number of buildings experienced extensive brittle damage to this type of connection during the Northridge earthquake. As a result, an emergency code change was made to the 1994 *Uniform Building Code* (ICBO 1994) to remove the prequalification of this type of connection. For a full discussion of these connections, please refer to FEMA 351 (2000b) and FEMA 355D (2000e).

A.3.1.3.1 DRIFT CHECK: The drift ratio of the steel moment frames, calculated using the quick check procedure of Section 4.5.3.1, is less than 0.025 for life safety and 0.015 for Immediate Occupancy. Moment frames are more flexible than shear wall or braced frame structures. This flexibility can lead to large interstory drifts that may potentially cause extensive structural and nonstructural damage to welded beam–column connections, partitions, and cladding. Drifts also may induce large P-Δ demands and pounding where adjacent buildings are present.

For Building Type S4 (Dual Systems), the drift check is performed using 25% of the computed seismic forces.

An analysis of noncompliant frames is required to demonstrate the adequacy of frame elements subjected to excessive lateral drifts.

The most direct mitigation approach is to add properly placed and distributed stiffening elements—new moment frames, braced frames, or shear walls—that can reduce the story drifts to acceptable levels. Alternatively, the addition of energy dissipation devices to the system may reduce the drift, though these are outside the scope of the deficiency-based retrofit method.

A.3.1.3.2 COLUMN AXIAL STRESS CHECK: The axial stress caused by gravity loads in columns subjected to overturning forces is less than $0.10f_y$. alternatively, the axial stress caused by overturning forces alone, calculated using the quick check procedure of Section 4.5.3.6, is less than $0.30F_y$. Columns that carry a substantial amount of gravity load may have limited additional capacity to resist seismic forces. Where axial forces caused by seismic overturning moments are added, the columns may buckle in a nonductile manner because of excessive axial compression.

The alternative calculation of overturning stresses caused by seismic forces alone is intended to provide a means of identifying frames that are likely to be adequate: frames with high gravity loads but small seismic overturning forces.

Where both demands are large, the combined effect of gravity and seismic forces must be calculated to demonstrate compliance.

A.3.1.3.3 FLEXURAL STRESS CHECK: The average flexural stress in the moment frame columns and beams, calculated using the quick check procedure of Section 4.5.3.9 is less than F_y. Columns need not be checked if the strong column–weak beam checklist item is compliant. The flexural stress check provides a quick assessment of the overall level of demand on the structure. The concern is the overall strength of the building. Although most steel moment frame behavior is controlled by drift, there may be some configurations that do not have adequate strength.

A.3.1.3.4 MOMENT-RESISTING CONNECTIONS: All moment connections are able to develop the strength of the adjoining members based on the specified minimum yield stress of steel for moderate seismicity and the strength of the adjoining members or panel zones based on 110% of the expected yield stress of the steel per AISC 341 (2010A) for high seismicity. See Section A.3.1.3 for a general discussion of moment frame connections. For this standard, the Tier 1 evaluation statement is effectively considered noncomplaint for full penetration flange welds subject to higher cyclic demands. A more detailed analysis is required to determine the adequacy of these moment-resisting connections.

Adding a stiffer seismic-force-resisting system (e.g., braced frames or shear walls) can reduce the expected rotation demands. Connections can be modified by adding flange cover plates, vertical ribs, haunches, or brackets, or removing beam flange material to initiate yielding away from the connection location (e.g., via a pattern of drilled holes or the cutting out of flange material). Partial penetration splices, which may become more vulnerable for conditions where the beam–column connections

are modified to be more ductile, can be modified by adding plates and/or welds. Adding continuity plates alone is not likely to enhance the connection performance significantly. Moment-resisting connection capacity can be increased by adding cover plates or haunches or by using other techniques as stipulated in FEMA 351 (2000b).

A.3.1.3.5 PANEL ZONES: All panel zones have the shear capacity to resist the shear demand required to develop 0.8 times the sum of the flexural strengths of the girders framing in at the face of the column. Panel zones with thin webs may yield or buckle before developing the capacity of the adjoining members, reducing the inelastic performance and ductility of the moment frames.

Where panel zones cannot develop the strength of the beams, compliance can be demonstrated by checking the panel zones for actual shear demands.

Refer to Section A.3.1.3.4 for additional guidelines for retrofitting moment frame connections.

A.3.1.3.6 COLUMN SPLICES: All column splice details located in moment frames include connection of both flanges and the web. for immediate occupancy, the splice develops the strength of the column. The lack of a substantial connection at the splice location may lead to separation of the spliced sections and misalignment of the columns, resulting in loss of vertical support and partial or total collapse of the building. Tests on partial-penetration weld splices have shown limited ductility.

An inadequate connection also reduces the effective capacity of the column. Splices should be checked against calculated demands to demonstrate compliance.

Refer to Section A.3.1.3.4 for additional guidelines for retrofitting moment frame connections.

A.3.1.3.7 STRONG COLUMN–WEAK BEAM: The percentage of strong column–weak beam joints in each story of each line of moment-resisting frames is greater than 50%. Where columns are not strong enough to force hinging in the beams, column hinging can lead to story mechanisms and a concentration of inelastic activity at a single level. Excessive story drifts may result in instability of the frame caused by P-Δ effects. Good postelastic behavior consists of yielding distributed throughout the frame. A story mechanism limits forces in the levels above, preventing the upper levels from yielding.

If it can be demonstrated that noncompliant columns are strong enough to resist calculated demands with sufficient overstrength, acceptable behavior can be expected.

Steel plates can be added to increase the strength of the steel columns to beyond that of the beams to eliminate this issue. Stiffening elements (e.g., braced frames, shear walls, or additional moment frames) can be added throughout the building to reduce the expected frame demands.

A.3.1.3.8 COMPACT MEMBERS: All frame elements meet section requirements set forth by AISC 341 Table D1.1 for "moderately ductile" members for life safety and for "highly ductile" members for immediate occupancy, except for building type s3, where frame elements meet compact section requirements set forth by AISC 360 Table B4.1. Noncompact frame elements may experience premature local buckling before development of their full moment capacities. Members that do not meet these criteria may experience premature local buckling before development of their full moment capacities. This problem can lead to poor inelastic behavior and ductility.

The adequacy of the frame elements can be demonstrated by a Tier 2 evaluation using reduced *m*-factors in consideration of reduced capacities for noncompact sections.

Noncompact members can be eliminated by adding appropriate steel plates. Stiffening elements (e.g., braced frames, shear walls, or additional moment frames) can be added throughout the building to reduce the expected frame demands.

A.3.1.3.9 BEAM PENETRATIONS: All openings in frame–beam webs are less than one-quarter of the beam depth and are located in the center half of the beams. Members with large beam penetrations may fail in shear before the development of their full moment capacity, resulting in poor inelastic behavior and ductility.

The critical section is at the penetration with the highest shear demand. Shear transfer across the web opening induces secondary moments in the beam sections above and below the opening that must be considered in the analysis.

Eliminating or properly reinforcing large member penetrations develops the demanded strength and deformations. Stiffening elements (e.g., braced frames, shear walls, or additional moment frames) can be added throughout the building to reduce the expected frame demands.

A.3.1.3.10 GIRDER FLANGE CONTINUITY PLATES: There are girder flange continuity plates at all moment frame joints. The lack of girder flange continuity plates may lead to a premature failure at the column web or flange at the joint. Beam flange forces are transferred to the column web through the column flange, resulting in a high-stress concentration at the base of the column web. The presence of continuity plates, however, transfers the beam flange forces along the entire length of the column web.

Adequate force transfer without continuity plates depends on the strength and stiffness of the column flange in weak-way bending.

Refer to Section A.3.1.3.4 for additional guidelines for retrofitting moment frame connections.

A.3.1.3.11 OUT-OF-PLANE BRACING: Beam–column joints are braced out-of-plane. Columns without proper bracing may buckle prematurely out-of-plane before the strength of the joint can be developed. This buckling limits the ability of the frame to resist seismic forces.

The combination of axial load and moment on the columns results in higher compression forces in one of the column flanges. The tendency for highly loaded joints to twist out-of-plane is caused by compression buckling of the critical column compression flange.

Compliance can be demonstrated if the column section can provide adequate lateral restraint for the joint between points of lateral support.

Lateral bracing in the form of new steel components can be added to reduce member unbraced lengths to within the limits prescribed. Stiffening elements (e.g., braced frames, shear walls, or additional moment frames) can be added throughout the building to reduce the expected frame demands.

A.3.1.3.12 BOTTOM FLANGE BRACING: The bottom flanges of beams are braced out-of-plane. Beam flanges in compression require out-of-plane bracing to prevent lateral torsional buckling. Buckling occurs before the full strength of the beam is developed, and the ability of the frame to resist seismic forces is limited.

Top flanges are typically braced by connection to the diaphragm. Bottom flange bracing occurs at discrete locations, such as at connection points for supported beams. The spacing of bottom flange bracing may not be close enough to prevent premature lateral torsional buckling where seismic forces induce large compression forces in the bottom flange.

A.3.1.4 Concrete Moment Frames Concrete moment frame buildings typically are more flexible than shear wall buildings. This flexibility can result in large interstory drifts that may lead to extensive nonstructural damage and P-Δ effects. If a concrete column has a capacity in shear that is less than the shear associated with the flexural capacity of the column, brittle column shear failure may occur and result in collapse. This condition is common in buildings in zones of moderate seismicity and in older buildings in zones of high seismicity. The columns in these buildings often have ties at standard spacing equal to the depth of the column, whereas current ACI 318 code maximum spacing for shear reinforcing is much smaller. The following are the characteristics of concrete moment frames that have demonstrated acceptable seismic performance:

- Brittle failure is prevented by providing a sufficient number of beam stirrups, column ties, and joint ties to ensure that the shear capacity of all elements exceeds the shear associated with flexural capacity.
- Concrete confinement is provided by beam stirrups and column ties in the form of closed hoops with 135-degree hooks at locations where plastic hinges are expected to occur.
- Overall performance is enhanced by long lap splices that are restricted to favorable locations and protected with additional transverse reinforcement.
- The strong column–weak beam requirement is achieved by suitable proportioning of the members and their longitudinal reinforcing.

Older frame systems that are lightly reinforced, precast concrete frames, and flat slab frames usually do not meet the detail requirements for ductile behavior. Adding properly placed and distributed stiffening elements such as shear walls or braced frames can fully supplement the moment frame system with a new seismic-force-resisting system. For eccentric joints, columns and/or beams may be jacketed to reduce the effective eccentricity. Jackets may also be provided for shear-critical columns. It must be verified that this new system sufficiently reduces the frame shears and story drifts to acceptable levels.

A.3.1.4.1 COLUMN SHEAR STRESS CHECK: The shear stress in the concrete columns, calculated using the quick check procedure of Section 4.5.3.2, is less than the greater of 100 lb/in.^{2} *or* $2\sqrt{f'_c}$. The shear stress check provides a quick assessment of the overall level of demand on the structure. The concern is the overall strength of the building.

A.3.1.4.2 COLUMN AXIAL STRESS CHECK: The axial compressive stress caused by unfactored gravity loads in columns subjected to overturning demands is less than $0.20f'_c$ *for Life Safety and* $0.13f'_c$ *for Immediate Occupancy for cast-in-place moment frames and* $0.10f'_c$ *for pre-cast moment frames without shear walls. alternatively, the axial compressive stress caused by overturning forces alone, calculated using the quick check procedure of Section 4.5.3.6, is less than* $0.30f'_c$. Columns that carry a substantial amount of gravity load may have limited additional capacity to resist seismic forces. Where axial forces caused by seismic overturning moments are added, the columns may crush in a nonductile manner because of excessive axial compression.

The alternative calculation of overturning stresses caused by seismic forces alone is intended to provide a means of identifying frames that are likely to be adequate: frames with high gravity loads but small seismic overturning forces.

Where both demands are large, the combined effect of gravity and seismic forces must be calculated to demonstrate compliance.

A.3.1.4.3 FLAT SLAB FRAMES: The seismic-force-resisting system is not a frame consisting of columns and a flat slab or plate without beams. The concern is the transfer of the shear and bending forces between the slab and column, which could result in a punching shear failure and partial collapse. The flexibility of the seismic-force-resisting system increases as the slab cracks.

Continuity of some bottom reinforcement through the column joint assists in the transfer of forces and provides some resistance to collapse by catenary action in the event of a punching shear failure.

A.3.1.4.4 PRESTRESSED FRAME ELEMENTS: The seismic-force-resisting frames do not include any prestressed or post-tensioned elements where the average prestress exceeds the lesser of 700 lb/in.^{2} *or* $f'_c/6$ *at potential hinge locations. The average prestress is calculated in accordance with the quick check procedure of Section 4.5.3.8.* Frame elements that are prestressed or posttensioned may not behave in a ductile manner. The concern is the inelastic behavior of prestressed elements.

A.3.1.4.5 CAPTIVE COLUMNS: There are no columns at a level with height/depth ratios less than 50% of the nominal height/depth ratio of the typical columns at that level for life safety and 75% for Immediate Occupancy. Captive columns tend to attract seismic forces because of high stiffness relative to other columns in a story. Significant damage has been observed in parking structure columns adjacent to ramping slabs, even in structures with shear walls. Captive column behavior also may occur in buildings with clerestory windows or in buildings with partial height masonry infill panels.

If not adequately detailed, the columns may suffer a nonductile shear failure, which may result in partial collapse of the structure.

A captive column that can develop the shear capacity to develop the flexural strength over the clear height has some ductility to prevent sudden nonductile failure of the vertical support system.

Columns may be jacketed with steel, fiber-reinforced polymer (FRP), or concrete such that they can resist the expected forces and drifts. Alternatively, the expected story drifts can be reduced throughout the building by infilling openings or adding shear walls.

A.3.1.4.6 NO SHEAR FAILURES: The shear capacity of frame members is able to develop the moment capacity at the ends of the members. If the shear capacity of a member is reached before the moment capacity, there is a potential for a sudden nonductile failure of the member, leading to collapse.

Members that cannot develop the flexural capacity in shear should be checked for adequacy against calculated shear demands. Note that, for columns, the shear capacity is affected by the axial loads and should be based on the most critical combination of axial load and shear.

A.3.1.4.7 STRONG COLUMN–WEAK BEAM: The sum of the moment capacity of the columns is 20% greater than that of the beams at frame joints. Where columns are not strong enough to force hinging in the beams, column hinging can lead to story mechanisms and a concentration of inelastic activity at a single level. Excessive story drifts may result in instability of the frame caused by P-Δ effects. Good postelastic behavior consists of yielding distributed throughout the frame. A story mechanism

limits forces in the levels above, preventing the upper levels from yielding.

If it can be demonstrated that noncompliant columns are strong enough to resist calculated demands with sufficient overstrength, acceptable behavior can be expected. A Tier 2 evaluation with reduced *m*-factors can be used to check the columns at near elastic levels.

A.3.1.4.8 BEAM BARS: At least two longitudinal top and two longitudinal bottom bars extend continuously throughout the length of each frame beam. At least 25% of the longitudinal bars provided at the joints for either positive or negative moment are continuous throughout the length of the members. The requirement for two continuous bars is a collapse prevention measure. In the event of complete beam failure, continuous bars prevent total collapse of the supported floor, holding the beam in place by catenary action.

Previous construction techniques used bent-up longitudinal bars as reinforcement. These bars transitioned from bottom to top reinforcement at the gravity load inflection point. Some amount of continuous top and bottom reinforcement is desired because moments caused by seismic forces can shift the location of the inflection point.

Because noncompliant beams are vulnerable to collapse, the beams are required to resist demands at an elastic level. Continuous slab reinforcement adjacent to the beam may be considered as continuous top reinforcement.

A.3.1.4.9 COLUMN BAR SPLICES: All column bar lap splice lengths are greater than $35d_b$ for life safety and $50d_b$ for Immediate Occupancy and are enclosed by ties spaced at or less than $8d_b$. Alternatively, column bars are spliced with mechanical couplers with a capacity of at least 1.25 times the nominal yield strength of the spliced bar. Located just above the floor level, column bar splices are typically located in regions of potential plastic hinge formation. Short splices are subject to sudden loss of bond. Widely spaced ties can result in a spalling of the concrete cover and loss of bond. Splice failures are sudden and nonductile.

Columns with noncompliant lap splices can be checked using Tier 2 with reduced *m*-factors to account for this potential lack of ductility. If the members have sufficient capacity, the demands on the splices are less likely to exceed the capacity of the bond.

A.3.1.4.10 BEAM BAR SPLICES: The lap splices or mechanical couplers for longitudinal beam reinforcing are not located within $L_b/4$ of the joints and are not located in the vicinity of potential plastic hinge locations. Lap splices located at the end of beams and in the vicinity of potential plastic hinges may not be able to develop the full moment capacity of the beam as the concrete degrades during multiple cycles.

Beams with noncompliant lap splices can be checked using Tier 2 with reduced *m*-factors to account for this potential lack of ductility. If the members have sufficient capacity, the demands are less likely to cause degradation and loss of bond between concrete and the reinforcing steel.

A.3.1.4.11 COLUMN TIE SPACING: Frame columns have ties spaced at or less than D/4 throughout their length and at or less than $8D_b$ at all potential plastic hinge locations. Widely spaced ties reduce the ductility of the column, and the column may not be able to maintain full moment capacity through several cycles. Columns with widely spaced ties have limited shear capacity, and nonductile shear failures may result.

Elements with noncompliant confinement can be checked using Tier 2 with reduced *m*-factors to account for this potential lack of ductility.

A.3.1.4.12 STIRRUP SPACING: All beams have stirrups spaced at or less than d/2 throughout their length. At potential plastic hinge locations, stirrups are spaced at or less than the minimum of $8d_b$ or d/4. Widely spaced stirrups reduce the ductility of the beam, and the beam may not be able to maintain full moment capacity through several cycles. Beams with widely spaced stirrups have limited shear capacity, and nonductile shear failures may result.

Elements with noncompliant confinement can be checked using Tier 2 with reduced *m*-factors to account for this potential lack of ductility.

A.3.1.4.13 JOINT TRANSVERSE REINFORCING: Beam–column joints have ties spaced at or less than $8d_b$. Beam–column joints without shear reinforcement may not be able to develop the strength of the connected members, leading to nonductile failure of the joint. Perimeter columns are especially vulnerable because the confinement of joint is limited to three sides (along the exterior) or two sides (at a corner). Joints have more capacity if transverse beams exist on both sides of the joint.

A.3.1.4.14 JOINT ECCENTRICITY: There are no eccentricities larger than 20% of the smallest column plan dimension between girder and column centerlines. Joint eccentricities can result in high torsional demands on the joint area, which result in higher shear stresses. The smallest column plan dimension should be calculated for the column at each joint under consideration.

A.3.1.4.15 STIRRUP AND TIE HOOKS: The beam stirrups and column ties are anchored into the member cores with hooks of 135 degrees or more. To be fully effective, stirrups and ties must be anchored into the confined core of the member. Ninety-degree hooks that are anchored within the concrete cover are unreliable if the cover spalls during plastic hinging. The amount of shear resistance and confinement are reduced if the stirrups and ties are not well anchored.

Elements with noncompliant confinement can be checked using Tier 2 with reduced *m*-factors to account for this potential lack of ductility.

A.3.1.5 Precast Concrete Moment Frames The development of a competent load path is extremely critical in these buildings. If the connections have sufficient strength so that yielding first occurs in the members rather than in the connections, the building should be evaluated as a moment frame system Type C1.

A.3.1.5.1 PRECAST CONNECTION CHECK: The precast connections at frame joints have the capacity to resist the shear and moment demands calculated using the Quick Check procedure of Section 4.5.3.5. Precast frame elements may have sufficient strength to meet seismic force requirements, but connections often cannot develop the strength of the members and may be subject to premature nonductile failures. Failure mechanisms may include fractures in the welded connections between inserts, pullout of embeds, and spalling of concrete.

Because full member capacities cannot be realized, the behavior of this system is entirely dependent on the performance of the connections.

A.3.1.5.2 PRECAST FRAMES: For buildings with concrete shear walls, precast concrete frame elements are not considered primary components for resisting seismic forces. Precast frame elements may have sufficient strength to meet seismic force requirements, but connections often cannot develop the strength of the members and may be subject to premature nonductile failures. Failure mechanisms may include fractures in the

welded connections between inserts, pullout of embeds, and spalling of concrete.

Because full member capacities cannot be realized, the behavior of this system is entirely dependent on the performance of the connections.

A.3.1.5.3 PRECAST CONNECTIONS: For buildings with concrete shear walls, the connection between precast frame elements such as chords, ties, and collectors in the seismic-force-resisting system develops the capacity of the connected members. Precast frame elements may have sufficient strength to meet seismic force requirements, but connections often cannot develop the strength of the members and may be subject to premature nonductile failures. Failure mechanisms may include fractures in the welded connections between inserts, pullout of embeds, and spalling of concrete.

Because full member capacities cannot be realized, the behavior of this system is entirely dependent on the performance of the connections.

The connections of chords, ties, and collectors can be upgraded to increase strength and/or ductility, providing alternative load paths for seismic forces. Upgrading can be achieved by such methods as adding confinement ties or increasing embedment. Shear walls can be added to reduce the demand on connections.

A.3.1.6 Frames Not Part of the Seismic-Force-Resisting System This section deals with secondary components consisting of frames that were not designed to be part of the seismic-force-resisting system. These are basic structural frames of steel or concrete that are designed for gravity loads only. Shear walls or other vertical elements provide the resistance to seismic forces. In actuality, however, all frames act as part of the seismic-force-resisting system. Lateral drifts of the building induce forces in the beams and columns of the secondary frames. Furthermore, in the event that the primary elements fail, the secondary frames become the primary seismic-force-resisting components of the building.

If the walls are concrete (infilled in steel frames or monolithic in concrete frames), the building should be treated as a concrete shear wall building (Types C2 or C2a) with the frame columns as boundary elements. If the walls are masonry infills, the frames should be treated as steel or concrete frames with infill walls of masonry (Types S5, S5a, C3, or C3a). Research is continuing on the behavior of infill frames. Seismic forces are resisted by compression struts that develop in the masonry infill and induce forces on the frame elements eccentric to the joints.

The concern for secondary frames is the potential loss of vertical-load-carrying capacity caused by excessive deformations and P-Δ effects.

A.3.1.6.1 COMPLETE FRAMES: Steel or concrete frames classified as secondary components form a complete vertical-load-carrying system. If the frame does not form a complete vertical-load-carrying system, the walls are required to provide vertical support as bearing walls (Fig. A-15). A frame is incomplete if there are no columns cast into the wall, there are no columns adjacent to the wall, and beams frame into the wall, supported solely by the wall.

During an earthquake, shear walls might become damaged by seismic forces, limiting their ability to support vertical loads. Loss of vertical support may lead to partial collapse.

Compliance can be demonstrated if the wall is judged adequate for combined vertical and seismic forces.

A.3.1.6.2 DEFLECTION COMPATIBILITY: Secondary components have the shear capacity to develop the flexural strength of the components and for immediate occupancy are compliant with the following items: COLUMN BAR SPLICES, BEAM BAR SPLICES, COLUMN TIE SPACING, STIRRUP SPACING, and STIRRUP AND TIE HOOKS. Frame components, especially columns, that are not specifically designed to participate in the seismic-force-resisting system still undergo displacements associated with overall seismic interstory drifts. If the columns are located some distance away from the seismic-force-resisting elements, the added deflections caused by semirigid floor diaphragms increase the drifts. Stiff columns, designed for potentially high gravity loads, may develop significant bending moments because of the imposed drifts. The moment or axial force interaction may lead to a nonductile failure of the columns and a collapse of the building.

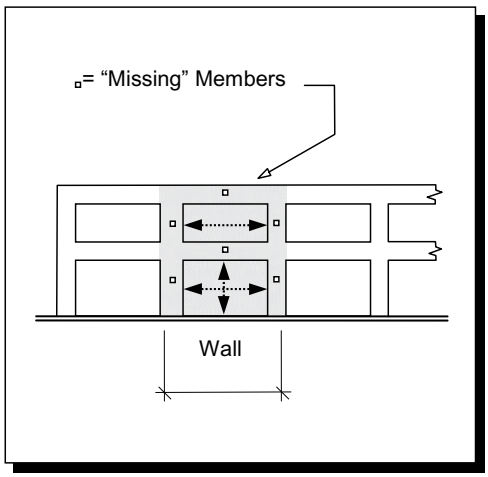

FIG. A-15. Incomplete Frame

Vertical seismic-force-resisting elements can be added to decrease the drift demands on the columns, or the ductility of the columns can be increased. Jacketing the columns with steel, fiber-reinforced polymer (FRP), or concrete is one approach to increase their ductility.

A.3.1.6.3 FLAT SLABS: Flat slabs or plates not part of the seismic-force-resisting system have continuous bottom steel through the column joints. Flat slabs not designed to participate in the seismic-force-resisting system may still experience seismic forces because of displacements associated with overall building drift. The concern is the transfer of the shear and bending forces between the slab and column, which could result in a punching shear failure.

A problem with some slabs can occur when a small section of slab exists between two adjacent shear walls or braced frames. The section of slab can act as a coupling beam, even though it was not intended to do so. This action can result in excessive damage to the slab and loss of vertical slab support if the slab is not properly detailed. Thin slabs and those with long spans have less tendency to act as a coupling beam and would attract less force.

Continuity of some bottom reinforcement through the column joint assists in the transfer of forces and provides some resistance to collapse by catenary action in the event of a punching shear failure (Fig. A-16). Bars can be considered continuous if they have proper lap splices, have mechanical couplers, or are developed beyond the support.

A.3.2 Shear Walls

A.3.2.1 General In the analysis of shear walls, it is customary to consider the shear taken by the length of the wall and the flexure taken by vertical reinforcement added at each end, much

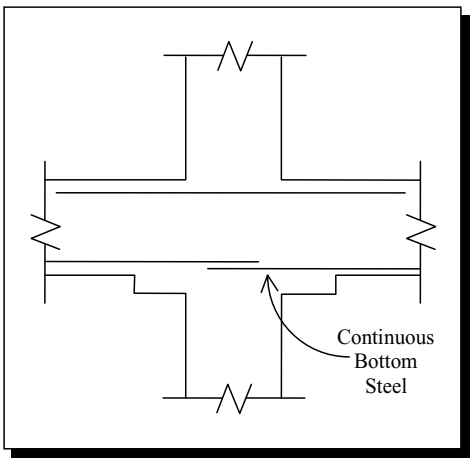

FIG. A-16. Continuous Bottom Steel

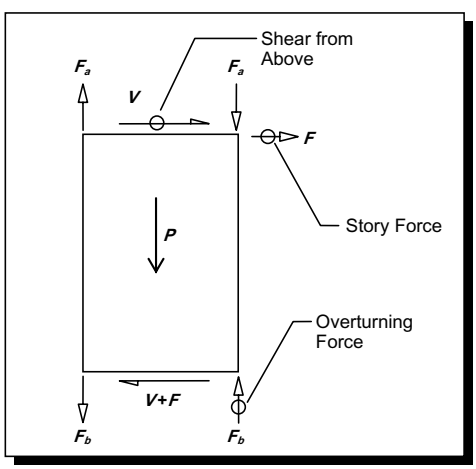

FIG. A-17. Wall Free-Body Diagram

as flexure in diaphragms is designed to be taken by chords at the edges. Squat walls that are long compared with their height are dominated by shear behavior. Flexural forces require only a slight local reinforcement at each end. Slender walls that are tall compared with their length are usually dominated by flexural behavior and may require substantial boundary elements at each end.

It is a good idea to sketch a complete free-body diagram of the wall (as indicated in Fig. A-17) so that no forces are inadvertently neglected. An error often made in the design of wood shear walls is to treat the walls one story at a time, considering only the shear force in the wall and overlooking the accumulation of overturning forces from the stories above.

Where the earthquake direction being considered is parallel to a shear wall, the wall develops in-plane shear and flexural forces as described above. Where the earthquake direction is perpendicular to a shear wall, the wall contributes little to the seismic force resistance of the building and the wall is subjected to out-of-plane forces. This section addresses the in-plane behavior of shear walls. Out-of-plane strength and anchorage of shear walls to the structure is addressed in Section A.5.

Solid shear walls usually have sufficient strength, though they may be lightly reinforced. Problems with shear wall systems arise where walls are not continuous to the foundation or where numerous openings break the walls up into small piers with limited shear and flexural capacity.

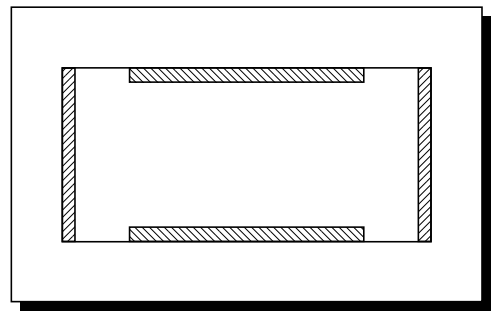

FIG. A-18. Redundancy in Shear Walls

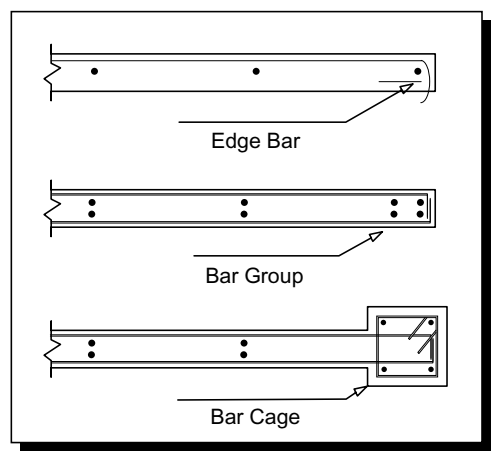

FIG. A-19. Boundary Elements

A.3.2.1.1 REDUNDANCY: The number of lines of shear walls in each direction is greater than or equal to 2. Refer to Section A.3.1.1.1 for commentary related to redundancy. Fig. A-18 illustrates an example of redundancy for shear wall buildings in which there are multiple lines of resistance to distribute the seismic forces uniformly throughout the structure and multiple bays in each line of resistance to reduce the shear and flexure demands on any one element.

A.3.2.2 Concrete Shear Walls In highly redundant buildings with many long walls, stresses in concrete shear walls are usually low. In less redundant buildings with large openings and slender walls, the stresses can be high. In the ultimate state, where overturning forces are at their highest, a thin wall may fail in buckling along the compression edge, or it may fail in tension along the tension edge. Tension failures may consist of slippage in bar lap splices, or bar yield and fracture if adequate lap splices have been provided.

In the past, designs have been based on liberal assumptions about compression capacity and have simply packed vertical rebar into the ends of the walls to resist the tensile forces. Recent codes, recognizing the importance of boundary members, have special requirements for proportions, bar splices, and transverse reinforcement. Examples of boundary members with varying amounts of reinforcing are shown in Fig. A-19. Existing buildings often do not have these elements, and the acceptance criteria are designed to allow for this.

Another development in recent codes is the requirement to provide shear strength compatible with the flexural capacity of the wall to ensure ductile flexural yielding before brittle shear failure. Long continuous walls and walls with embedded steel or large boundary elements can have high flexural capacities

with the potential to induce correspondingly high shear demands that are over and above the minimum design shear demands.

A.3.2.2.1 SHEAR STRESS CHECK: The shear stress in the concrete shear walls, calculated using the Quick Check procedure of Section 4.5.3.3, is less than the greater of 100 lb/in.^{2} or $2\sqrt{f_c'}$. The shear stress check provides a quick assessment of the overall level of demand on the structure. The concern is the overall strength of the building.

For Building Type S4 (Dual System), the backup moment frame is neglected when determining the shear stresses on the shear walls.

New shear walls can be provided and/or the existing walls can be strengthened to satisfy seismic demand criteria. New and strengthened walls must form a complete, balanced, and properly detailed seismic-force-resisting system for the building. Special care is needed to ensure that the connection of the new walls to the existing diaphragm is appropriate and of sufficient strength such that yielding first occurs in the wall. All shear walls must have sufficient shear and overturning resistance to meet the load criteria of this standard.

A.3.2.2.2 REINFORCING STEEL: The ratio of reinforcing steel area to gross concrete area is not less than 0.0012 in the vertical direction and 0.0020 in the horizontal direction. In addition, for immediate occupancy the spacing of reinforcing steel is equal to or less than 18 in. If the walls do not have sufficient reinforcing steel, they have limited capacity in resisting seismic forces. The wall also behaves in a nonductile manner for inelastic forces. The minimum reinforcing ratios are based on the ACI requirements for general wall reinforcing that have been applicable for many years. These limits are applicable for walls with No. 5 or smaller reinforcing bars horizontally and vertically.

Shear walls can be strengthened by infilling openings, applying fiber-reinforced polymer (FRP), or by thickening the walls; for examples, see FEMA 172 (1992a), Section 3.2.1.2.

A.3.2.2.3 COUPLING BEAMS: The stirrups in coupling beams over means of egress are spaced at or less than d/2 and are anchored into the confined core of the beam with hooks of 135 degrees or more. The ends of both walls to which the coupling beam is attached are supported at each end to resist vertical loads caused by overturning. In addition, for immediate occupancy, coupling beams have the capacity in shear to develop the uplift capacity of the adjacent wall. Coupling beams with sufficient strength and stiffness can increase the lateral stiffness of the system significantly beyond the stiffnesses of the independent walls. When the walls deflect laterally, large moments and shears are induced in the coupling beams as they resist the imposed deformations. Coupling beams also link the coupled walls for overturning resistance (Fig. A-20).

Coupling beam reinforcement is often inadequate for the demands that can be induced by the movement of the coupled walls. Seismic forces may damage and degrade the beams so severely that the system degenerates into a pair of independent walls. This degeneration changes the distribution of overturning forces, which may result in potential stability problems for the independent walls. The boundary reinforcement also may be inadequate for flexural demands if the walls act independently.

If the beams are lightly reinforced, their degradation could result in falling debris that is a potential life safety hazard, especially at locations of egress.

Degradation of the strength and stiffness of coupling beams causes the two wall segments on either end of the coupling beam to act more as independent walls. Therefore, these walls must have support for vertical loads at each end of the wall to resist vertical loads caused by overturning.

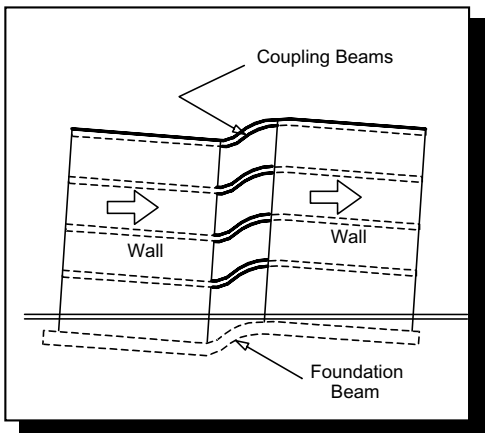

FIG. A-20. Coupled Walls

To eliminate the need to rely on the coupling beam, the walls may be strengthened as required. The beam could be jacketed only as a means of controlling debris. If possible, the opening that defines the coupling beam could be infilled.

A.3.2.2.4 OVERTURNING: All shear walls have aspect ratios less than 4-to-1. Wall piers need not be considered. Tall, slender shear walls may have limited overturning resistance. Displacements at the top of the building are greater than anticipated if overturning forces are not properly resisted.

Often sufficient resistance can be found in immediately adjacent bays if a load path is present to activate the adjacent column dead loads.

Lengthening or adding shear walls can reduce overturning demands; increasing the length of footings captures additional building dead load.

A.3.2.2.5 CONFINEMENT REINFORCING: For shear walls with aspect ratios greater than 2-to-1, the boundary elements are confined with spirals or ties with spacing less than $8d_b$. Fully effective shear walls require boundary elements to be properly confined with closely spaced ties (Fig. A-19). Degradation of the concrete in the vicinity of the boundary elements can result in buckling of rebar in compression and failure of lap splices in tension. Nonductile failure of the boundary elements leads to reduced capacity to resist overturning forces.

Splices at boundary elements may be improved by welding bars together after exposing them.

A.3.2.2.6 WALL REINFORCING AT OPENINGS: There is added trim reinforcement around all openings with a dimension greater than three times the thickness of the wall. Conventional trim steel is adequate only for small openings (Fig. A-21). Large openings cause significant shear and flexural stresses in the adjacent piers and spandrels. Inadequate reinforcing steel around these openings leads to strength deficiencies, nonductile performance, and degradation of the wall.

Shear walls with inadequate reinforcement at openings can be strengthened by infilling openings or by thickening the walls; for examples, see FEMA 172 (1992a), Section 3.2.1.2.

A.3.2.2.7 WALL THICKNESS: Thicknesses of bearing walls is not less than 1/25 the unsupported height or length, whichever is shorter, nor less than 4 in. Slender bearing walls may have limited capacity for vertical loads and higher potential for damage because of out-of-plane forces and magnified moments.

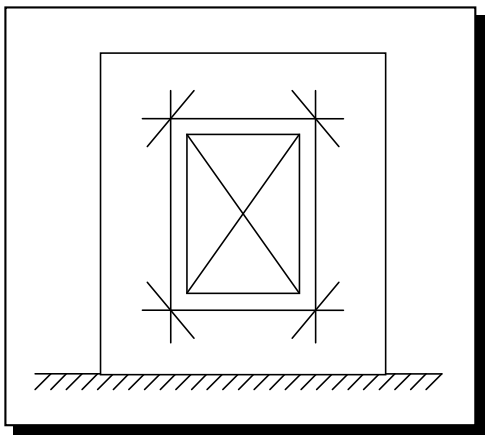

FIG. A-21. Conventional TrimSteel

A.3.2.3 Precast Concrete Shear Walls Precast concrete shear walls are constructed in segments that are usually interconnected by embedded steel elements. These connections usually possess little ductility but are important to the overall behavior of the wall assembly. Interconnection between panels increases the overturning capacity by transferring overturning demands to end panels. Panel connections at the diaphragm are often used to provide continuous diaphragm chords. Failure of these connections reduces the capacity of the system.

A.3.2.3.1 SHEAR STRESS CHECK: The shear stress in the precast panels, calculated using the Quick Check procedure of section 4.5.3.3, is less than the greater of 100 lb/in.^{2} *or* $2\sqrt{f'_c}$. The shear stress check provides a quick assessment of the overall level of demand on the structure. The concern is the overall strength of the building.

A.3.2.3.2 REINFORCING STEEL: The ratio of reinforcing steel area to gross concrete area is not less than 0.0012 in the vertical direction and 0.0020 in the horizontal direction. In addition, for immediate occupancy, the spacing of reinforcing steel is equal to or less than 18 in. If the walls do not have sufficient reinforcing steel, they have limited capacity in resisting seismic forces. The wall also behaves in a nonductile manner for inelastic forces.

It should be noted that in tilt-up construction, the reinforcement ratios are typically reversed because the principal direction of bending is vertical rather than horizontal.

A.3.2.3.3 WALL OPENINGS: The total width of openings along any perimeter wall line constitutes less than 75% of the length of any perimeter wall for life safety and 50% for immediate occupancy; the wall piers have aspect ratios of less than 2-to-1. In tilt-up construction, typical wall panels are often of sufficient length that special detailing for collector elements, shear transfer, and overturning resistance is not provided. Perimeter walls that are substantially open, such as at loading docks, have limited wall length to resist seismic forces and may be subject to overturning or shear transfer problems that were not accounted for in the original design.

Walls are compliant if an adequate load path for shear transfer, collector forces, and overturning resistance can be demonstrated.

Infilling openings or adding shear walls in the plane of the open bays can reduce demand on the connections and eliminate frame action.

A.3.2.3.4 PANEL-TO-PANEL CONNECTIONS: Adjacent wall panels are interconnected to transfer overturning forces between panels by methods other than steel welded inserts. Welded steel inserts can be brittle and may not be able to transfer the overturning forces between panels. Latent stresses may be present because of shrinkage and temperature effects. Brittle failure may include weld fracture, pullout of the embedded anchors, or spalling of the concrete.

Failure of these connections results in separation of the wall panels and a reduction in overturning resistance.

Appropriate retrofit solutions are outlined in FEMA 172 (1992a), Section 3.2.2.3.

Interpanel connections with inadequate capacity can be strengthened by adding steel plates across the joint or by providing a continuous wall by exposing the reinforcing steel in the adjacent units and providing ties between the panels and patching with concrete. Providing steel plates across the joint is typically the most cost-effective approach, although care must be taken to ensure adequate anchor bolt capacity by providing adequate edge distances; see also FEMA 172 (1992a), Section 3.2.2.

A.3.2.3.5 WALL THICKNESS: Thickness of bearing walls is not less than 1/40 for Life Safety or 1/25 for Immediate Occupancy. The unsupported height or length, whichever is shorter, nor less than 4 in. Slender bearing walls may have limited capacity for vertical loads and higher potential for damage caused by out-of-plane forces and magnified moments.

A.3.2.4 Reinforced Masonry Shear Walls

A.3.2.4.1 SHEAR STRESS CHECK: The shear stress in the reinforced masonry shear walls, calculated using the Quick Check procedure of Section 4.5.3.3, is less than 70 lb/in.^{2} The shear stress check provides a quick assessment of the overall level of demand on the structure. The concern is the overall strength of the building. For partially grouted walls, the effective net section should be used in calculating the shear stress.

To meet the performance objectives of this standard, new walls can be provided or the existing walls can be strengthened as needed. New and strengthened walls must form a complete, balanced, and properly detailed seismic-force-resisting system for the building. Special care is needed to ensure that the connection of the new walls to the existing diaphragm is appropriate and of sufficient strength to deliver the actual seismic forces or force yielding in the wall. All shear walls must have sufficient shear and overturning resistance.

A.3.2.4.2 REINFORCING STEEL: The total vertical and horizontal reinforcing steel ratio in reinforced masonry walls is greater than 0.002 of the wall with the minimum of 0.0007 in either of the two directions; the spacing of reinforcing steel is less than 48 in.; And All Vertical Bars Extend to The top of The Walls. If the walls do not have sufficient reinforcing steel, they have limited capacity in resisting seismic forces. The wall also behaves in a nonductile manner for inelastic forces.

Nondestructive methods should be used to locate reinforcement, and selective demolition should be used if necessary to determine the size and spacing of the reinforcing. If it cannot be verified that the wall is reinforced in accordance with the minimum requirements, then the wall should be assumed to be unreinforced and the procedures for unreinforced masonry (URM) should be followed.

A.3.2.4.3 REINFORCING AT WALL OPENINGS: All wall openings that interrupt rebar have trim reinforcing on all sides. Conventional trim steel is adequate only for small openings. Large openings cause significant shearing and flexural stresses in the adjacent piers and spandrels. Inadequate

reinforcing steel around these openings leads to strength deficiencies, nonductile performance, and degradation of the wall.

The presence and location of reinforcing steel at openings may be established using nondestructive or destructive methods at selected locations to verify the size and location of the reinforcing, or using both methods. Reinforcing must be provided at all openings as required to meet the standard criteria. Steel plates may be bolted to the surface of the section as long as the bolts are sufficient to yield the steel plate.

A.3.2.4.4 PROPORTIONS: The height-to-thickness ratio of the shear walls at each story is less than 30. Slender bearing walls may have limited capacity for vertical loads and higher potential for damage caused by out-of-plane forces and magnified moments.

Walls with insufficient thickness could be strengthened either by increasing the thickness of the wall or by adding a well detailed strong-back system. The thickened wall must be detailed in a manner that fully interconnects the wall over its full height. The strong-back system must be designed for strength, connected to the structure in a manner that it (1) develops the full yield strength of the strong back and (2) connects to the diaphragm in a manner that distributes the load into the diaphragm and has sufficient stiffness to ensure that the components can perform in a compatible and acceptable manner. The stiffness of the bracing should limit the out-of-plane deflections to acceptable levels such as L/600 to L/900.

A.3.2.5 Unreinforced Masonry Shear Walls

A.3.2.5.1 SHEAR STRESS CHECK: The shear stress in the unreinforced masonry shear walls, calculated using the quick check procedure of section 4.5.3.3, is less than 30 lb/in.^{2} for clay units and 70 lb/in.^{2} for concrete units. For infill frames, bays with openings greater than 25% of the wall area cannot be included in A_w of Eq. (4-9). The shear stress check provides a quick assessment of the overall level of demand on the structure. The concern is the overall strength of the building. For concrete units, the effective net shear area should be used in calculating the shear stress.

For masonry infill walls in frames, the behavior of bays with openings is complex. Multiple compression struts form in these perforated infills and induce forces on the surrounding frame, and the contribution of the perforated masonry infills is not simply predicted. Openings in the seismic-force-resisting walls could be infilled as needed to meet the standard stress check. If supplemental strengthening is required, it should be designed using the Tier 3 systematic retrofit procedure in accordance with Chapter 6. Walls that do not meet the masonry layup requirements should not be considered as seismic-force-resisting elements and should be specially supported for out-of-plane forces.

A.3.2.5.2 PROPORTIONS: The height-to-thickness ratio of the shear walls at each story is less than the following:

Top story of multi-story building	*9*
First story of multi-story building	*15*
All other conditions	*13*

Slender unreinforced masonry bearing walls with large height-to-thickness ratios have a potential for damage caused by out-of-plane forces which may result in falling hazards and potential collapse of the structure.

Refer to Section A.3.2.4.4 for commentary regarding potential strengthening measures.

A.3.2.5.3 MASONRY LAYUP: Filled collar joints of multi-wythe masonry walls have negligible voids. Where walls have poor collar joints, the inner and outer wythes act independently. The walls may be inadequate to resist out-of-plane forces because of a lack of composite action between the inner and outer wythes.

Mitigation to provide out-of-plane stability and anchorage of the wythes may be necessary to achieve the selected Performance Level.

Walls that do not meet the masonry layup requirements should not be considered as seismic-force-resisting elements and should be specially supported for out-of-plane forces.

A.3.2.6 Infill Walls in Frames

A.3.2.6.1 INIFLL WALL CONNECTIONS: Masonry is in full contact with the frame. Performance of frame buildings with masonry infill walls is dependent on the interaction between the frame and infill panels. In-plane seismic force resistance is provided by a compression strut developing in the infill panel that extends diagonally between corners of the frame. If gaps exist between the frame and infill, this strut cannot be developed (Fig. A-22). If the infill panels separate from the frame because of out-of-plane forces, the strength and stiffness of the system are determined by the properties of the bare frame, which may not be detailed to resist seismic forces. Severe damage or partial collapse caused by excessive drift and P-Δ effects may occur.

A positive connection is needed to anchor the infill panel for out-of-plane forces. In this case, a positive connection can consist of a fully grouted bed joint in full contact with the frame or complete encasement of the frame by the brick masonry. The mechanism for out-of-plane resistance of infill panels is discussed in Section A.3.2.6.2.

If the connection is nonexistent, mitigation with adequate connection to the frame is necessary to achieve the selected Performance Level.

It should be noted that it is impossible to simultaneously satisfy this section and Section A.3.1.2.1, which covers moment frames with infills not intended to be part of the seismic-force-resisting system.

A.3.2.6.2 PROPORTIONS: The height-to-thickness ratio of the infill walls at each Story is less than 9.0 for Life Safety in levels of high seismicity, 13.0 for Immediate Occupancy in levels of moderate seismicity, and 8.0 for Immediate Occupancy in levels of high seismicity. Slender masonry infill walls with large height-to-thickness ratios have a potential for damage caused by out-of-plane forces. Failure of these walls out-of-plane results in falling hazards and degradation of the strength and stiffness of the seismic-force-resisting system.

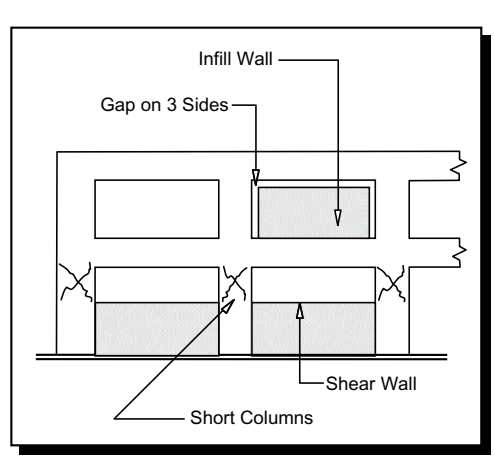

FIG. A-22. Infill Wall

The out-of-plane stability of infill walls is dependent on many factors, including flexural strength of the wall and confinement provided by the surrounding frame. If the infill is unreinforced, the flexural strength is limited by the flexural tension capacity of the material. The surrounding frame provides confinement, induces infill thrust forces, and develops arching action against out-of-plane forces. The height-to-thickness limits in the evaluation statement are based on arching action models that exceed any plausible acceleration levels in various levels of seismicity.

Further investigation of noncompliant infill panels requires a Tier 3 systematic evaluation.

A.3.2.6.3 CAVITY WALLS: The infill walls are not of cavity construction. Where the infill walls are of cavity construction, the inner and outer wythes act independently because of a lack of composite action, increasing the potential for damage from out-of-plane forces. Failure of these walls out-of-plane results in falling hazards and degradation of the strength and stiffness of the seismic-force-resisting system.

A.3.2.6.4 INFILL WALLS: The infill walls are continuous to the soffits of the frame beams and to the columns to either side. Discontinuous infill walls occur where full bay windows or ventilation openings are provided between the top of the infill and the bottom soffit of the frame beams. The portion of the column above the infill is a short captive column that may attract large shear forces because of increased stiffness relative to other columns (Fig. A-22). Partial infill walls also develop compression struts with horizontal components that are highly eccentric to the beam column joints. If not adequately detailed, concrete columns may suffer a nonductile shear failure, which may result in partial collapse of the structure. Because steel columns are not subject to the same kind of brittle failure, this is not generally considered a concern in steel frame infill buildings.

A column that can develop the shear capacity to develop the flexural strength over the clear height above the infill has some ductility to prevent sudden catastrophic failure of the vertical support system.

Except where it can be shown that the column is adequate, the partial infill wall should be isolated from the boundary columns to avoid a "short column" effect. In sizing the gap between the wall and the columns, the anticipated story drift must be considered.

A.3.2.6.5 INFILL WALL ECCENTRICITY: The centerline of the infill masonry wall is not offset from the centerline of the steel framing by more than 25% of the wall thickness. An eccentricity between the infill wall and the centerline of the steel framing can induce forces in the steel framing for which the steel framing may not be adequate. Also, large eccentricities can inhibit masonry strut formation.

A.3.2.7 Walls in Wood Frame Buildings

A.3.2.7.1 SHEAR STRESS CHECK: The shear stress in the shear walls, calculated using the Quick Check procedure of Section 4.5.3.3, is less than the following values:

Structural panel sheathing	*1,000 lb/ft*
Diagonal sheathing	*700 lb/ft*
Straight sheathing	*100 lb/ft*
All other conditions	*100 lb/ft*

The shear stress check provides a quick assessment of the overall level of demand on the structure. The concern is the overall strength of the building. The transfer of shear and overturning to the foundation also should be evaluated. The structural panel sheathing Quick Check capacity assumes that the wall is constructed adequately and in fair condition. Capacities should be reduced to account for deterioration or overdriven fasteners.

Walls may be added or existing openings may be filled. Alternatively, the existing walls and connections can be strengthened. The walls should be distributed across the building in a balanced manner to reduce the shear stress for each wall. Replacing heavy materials such as tile roofing with lighter materials also reduces shear stress.

A.3.2.7.2 STUCCO (EXTERIOR PLASTER) SHEAR WALLS: Multi-story buildings do not rely on exterior stucco walls as the primary seismic-force-resisting system. Exterior stucco walls are often used (intentionally and unintentionally) for resisting seismic forces. Stucco is relatively stiff but brittle, and the shear capacity is limited. Building movements caused by differential settlement, temperature changes, and earthquake or wind forces can cause cracking in the stucco and loss of lateral strength. Seismic force resistance is unreliable because sometimes the stucco delaminates from the framing and the system is lost. Multi-story buildings should not rely on stucco walls as the primary seismic-force-resisting system.

For strengthening or repair, the stucco should be removed, a wood structural panel shear wall should be added, and new stucco should be applied. The wood structural panel should be the manufacturer's recommended thickness for the installation of stucco. The new stucco should be installed in accordance with building code requirements for waterproofing. Walls should be sufficiently anchored to the diaphragms and foundations.

A.3.2.7.3 GYPSUM WALLBOARD OR PLASTER SHEAR WALLS: Interior plaster or gypsum wallboard are not used as shear walls on buildings more than one story high with the exception of the uppermost level of a multi-story building. Gypsum wallboard or gypsum plaster sheathing tends to be easily damaged by differential foundation movement or earthquake ground motions.

Though the capacity of these walls is low, most residential buildings have numerous walls constructed with plaster or gypsum wallboard. As a result, plaster and gypsum wallboard walls may provide adequate resistance to moderate earthquake shaking.

One problem that can occur is incompatibility with other seismic-force-resisting elements. For example, narrow plywood shear walls are more flexible than long stiff plaster walls; as a result, the plaster or gypsum walls take all the seismic demand until they fail, and then the plywood walls start to resist the seismic forces. In multi-story buildings, plaster or gypsum wallboard walls should not be used for shear walls except in the top story.

Plaster and gypsum wallboard can be removed and replaced with structural panel shear wall as required, and the new shear walls can be covered with gypsum wallboard.

A.3.2.7.4 NARROW WOOD SHEAR WALLS: Narrow wood shear walls with an aspect ratio greater than 2-to-1 for Life Safety and Immediate Occupancy in very low seismicity or 1.5-to-1 for Immediate Occupancy in low, moderate, or high seismicity are not used to resist seismic forces. Narrow shear walls are highly stressed and subject to severe deformations that reduce the capacity of the walls. Most of the damage occurs at the base and consists of sliding of the sill plate and deformation of hold-down anchors where present. As the deformation continues, the plywood pulls up on the sill plate, causing splitting. Splitting of the end studs at the bolted attachment of hold-down anchors is also common. The aspect ratio for wood walls is the story height to wall length.

Where narrow shear walls lack capacity, they should be replaced with shear walls with a height-to-width aspect ratio of 2:1 or less. These replacement walls must have sufficient strength, including being adequately connected to the diaphragm and sufficiently anchored to the foundation for shear and overturning forces.

A.3.2.7.5 WALLS CONNECTED THROUGH FLOORS: Shear walls have an interconnection between stories to transfer overturning and shear forces through the floor. In platform construction, wall framing is discontinuous at floor levels. The concern is that this discontinuity might prevent shear and overturning forces from being transferred between shear walls in adjacent stories.

Mitigation with elements or connections needed to complete the load path is necessary to achieve the selected Performance Level.

A.3.2.7.6 HILLSIDE SITE: For structures that are taller on at least one side by more than half of a one-half story because of a sloping site, all shear walls on the downhill slope have an aspect ratio less than 1-to-1 for Life Safety and 1-to-2 for Immediate Occupancy. Buildings on a sloping site experience significant torsion during an earthquake. Taller walls on the downhill slope are more flexible than the supports on the uphill slope. Therefore, significant displacement and racking of the shear walls on the downhill slope occur. If the walls are narrow, significant damage or collapse may occur.

A.3.2.7.7 CRIPPLE WALLS: Cripple walls below first-floor-level shear walls are braced to the foundation with wood structural panels. Cripple walls are short stud walls that enclose a crawl space between the first floor and the ground. Often there are no other walls at this level, and these walls have no stiffening elements other than architectural finishes. If this sheathing fails, the building experiences significant damage and, in the extreme case, may fall off its foundation. To be effective, all exterior cripple walls below the first-floor level should have adequate shear strength, stiffness, and proper connection to the floor and foundation. Cripple walls that change height along their length, such as along sloping walls on hillside sites, do not have a uniform distribution of shear along the length of the wall because of the varying stiffness. These walls may be subject to additional damage on the uphill side because of concentration of shear demand.

Mitigation with shear elements needed to complete the load path is necessary to achieve the selected Performance Level.

Where bracing is inadequate, new wood structural panel sheathing can be added to the cripple wall studs. The top edge of the wood structural panel is nailed to the floor framing, and the bottom edge is nailed into the sill plate; for an example, see FEMA 172 (1992a), Fig. 3.8.1.3. The cripple wall should not change height along its length (the stepped top of foundation). If it does, the shorter portion of the cripple wall carries the majority of the shear and significant torsion occurs in the foundation. Added wood structural panel sheathing must have adequate strength and stiffness to reduce torsion to an acceptable level. Also, it should be verified that the sill plate is properly anchored to the foundation. If anchor bolts are lacking or insufficient, additional anchor bolts should be installed. Blocking or framing clips may be needed to connect the cripple wall bracing to the floor diaphragm or the sill plate.

A.3.2.7.8 OPENINGS: Walls with openings greater than 80% of the length are braced with wood structural panel shear walls with aspect ratios of not more than 1.5-to-1 or are supported by adjacent construction through positive ties capable of transferring the seismic forces. Walls with large openings, such as garage doors, may have little or no resistance to shear and overturning forces. They must be specially detailed to resist these forces or braced to other parts of the structure with collectors, such as metal straps, developed into the adjacent construction. Special detailing and collectors are not part of conventional construction procedures. Lack of this bracing can lead to collapse of the wall.

Local shear transfer stresses can be reduced by distributing the forces from the diaphragm. Chords and/or collector members can be provided to collect and distribute shear from the diaphragm to the shear wall or bracing; for an example, see FEMA 172 (1992a), Fig. 3.7.1.3. Alternatively, the opening can be closed off by adding a new wall with wood structural panel sheathing.

A.3.2.7.9 HOLD-DOWN ANCHORS: All shear walls have hold-down anchors, constructed per acceptable construction practices, attached to the end studs. Buildings without hold-down anchors may be subject to significant damage caused by uplift and racking of the shear walls. Properly constructed hold-downs must connect the floors together and activate the weight of the foundation. They must be tightly connected to the boundary element in a manner such that the deformation of the shear wall does not destroy the integrity of the hold-downs. Building drawings and manufacturers' recommendations are helpful in determining the adequacy of the hold-downs.

This condition is not considered a life safety concern and only needs to be examined for the Immediate Occupancy Performance Level.

If the walls are not bolted to the foundation or if the bolting is inadequate, bolts can be installed through the sill plates at regular intervals; for example, see FEMA 172 (1992a), Fig. 3.8.1.2a. If the crawl space is not deep enough for vertical holes to be drilled through the sill plate, the installation of connection plates or angles may be a practical alternative (see FEMA 172 [1992a], Fig. 3.8.1.2b). Sheathing and additional nailing can be added where walls lack proper nailing or connections. Where the existing connections are inadequate, adding clips or straps delivers seismic forces to the walls and to the foundation sill plate.

A.3.3 Braced Frames Braced frames develop their seismic force resistance through axial forces developed in the diagonal bracing members. The braces induce forces in the associated beams and columns, and all are subjected to stresses that are primarily axial. Where the braces are eccentric to beam–column joints, members are subjected to shear and flexure in addition to axial forces. A portal frame with knee braces near the frame joints is one example.

Braced frames are classified as either concentrically braced frames or eccentrically braced frames (Fig. A-23). Concentrically braced frames (Section A.3.3.2) have braces that frame into beam–column joints or concentric connections with other braces. Minor connection eccentricities may be present and are accounted for in the design. Eccentrically braced frames (Section A.3.3.3) have braces that are purposely located away from joints and connections that are intended to induce shear and flexure demands on the members. The eccentricity is intended to force a concentration of inelastic activity at a predetermined location that will control the behavior of the system. Modern eccentrically braced frames are designed with strict controls on member proportions and special out-of-plane bracing at the connections to ensure that the frame behaves as intended.

If the strength of the braced frames is inadequate, more braced bays or shear wall panels can be added. The resulting seismic-

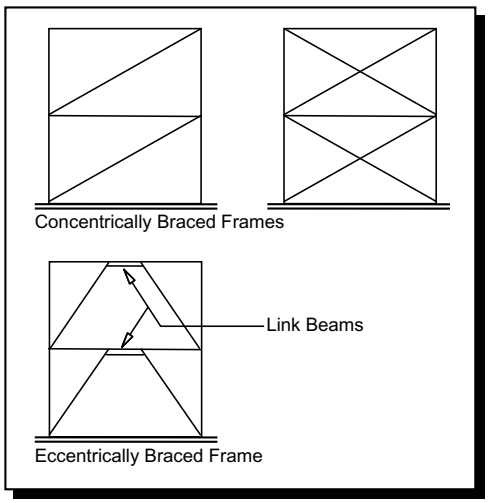

FIG. A-23. Braced Frames

force-resisting system must form a well balanced system of braced frames that do not fail at their joints, are properly connected to the floor diaphragms, and whose failure mode is yielding of braces rather than overturning.

Diagonals with inadequate stiffness should be strengthened using supplemental steel plates or replaced with a larger and/or different type of section. Global stiffness can be increased by the addition of braced bays or shear wall panels.

A.3.3.1 General

A.3.3.1.1 REDUNDANCY: The number of lines of braced frames in each principal direction is greater than or equal to 2 for Life Safety and immediate occupancy. the number of braced bays in each line is greater than 2 for life safety and 3 for immediate occupancy. Refer to Section A.3.1.1.1 for commentary related to redundancy.

A.3.3.1.2 BRACE AXIAL STRESS CHECK: The axial stress in the diagonals, calculated using the quick check procedure of Section 4.5.3.4, is less than 0.50F_y. The axial stress check provides a quick assessment of the overall level of demand on the structure. The concern is the overall strength of the building.

For Building Type S4 (Dual System), the backup moment frame is neglected when determining the axial stresses on the braced frame diagonals.

A.3.3.1.3 COLUMN SPLICES: All column splice details located in braced frames develop 50% of the tensile strength of the column for Life Safety and 100% of the tensile strength of the Column for Immediate Occupancy. Columns in braced frames may be subject to large tensile forces. A connection that is unable to resist this tension may limit the ability of the frame to resist seismic forces. Columns may uplift and slide off bearing supports, resulting in unexpected damage to the frame elements.

Column splices can be strengthened by adding plates and welds to ensure that they are strong enough to develop the connected components. Demands on the existing elements can be reduced by adding braced bays or shear wall panels.

A.3.3.1.4 SLENDERNESS OF DIAGONALS: All diagonal elements required to carry compression have kl/r ratios less than 200. Code design requirements allow compression diagonal braces to have *Kl/r* ratios of up to 200. Research has shown that frames with slender braces designed for compression strength behave well because of the overstrength inherent in their tension capacity. The research also has shown that the postbuckling cyclic fracture life of bracing members generally increases with an increase in slenderness ratio. An upper limit is provided to preclude dynamic effects associated with extremely slender braces (See AISC 341Commentary for more discussion).

A.3.3.1.5 CONNECTION STRENGTH: All the brace connections develop the buckling capacity of the diagonals for moderate seismicity and the yield capacity of the diagonals for high seismicity. Because connection failures are usually nonductile, it is more desirable to have inelastic behavior in the members.

Braced frame connections can be strengthened by adding plates and welds to ensure that they are strong enough to develop the connected components. Connection eccentricities that reduce component capacities can be eliminated, or the components can be strengthened to the required level by the addition of properly placed plates. Demands on the existing elements can be reduced by adding braced bays or shear wall panels.

A.3.3.1.6 OUT-OF-PLANE BRACING: Braced frame connections attached to beam bottom flanges located away from beam–column joints are braced out-of-plane at the bottom flange of the beams. Brace connections at beam bottom flanges that do not have proper bracing may have limited ability to resist seismic forces. Out-of-plane buckling may occur before the strength of the brace is developed. Connections to beam top flanges are braced by the diaphragm, so V-bracing need not be considered.

This statement is intended to target chevron-type bracing, where braces intersect the beam from below at a location well away from a column. Here, only the beam can provide out-of-plane stability for the connection. At beam–column joints, the continuity of the column provides stability for the connection.

To demonstrate compliance, the beam is checked for the strength required to provide out-of-plane stability using the 2% rule.

A.3.3.1.7 COMPACT MEMBERS: For moderate seismicity, all brace elements meet section requirements set forth by AISC 360 Table B4.1. For Life Safety in high seismicity, all brace elements meet section requirements set forth by AISC 341 Table D1.1, for "Moderately Ductile" members. for Immediate Occupancy in high seismicity, all column and brace elements meet section requirements set forth by AISC 341 Table D1.1, for "highly ductile" members, and braced frame beams meet the AISC 341 Table D1.1, requirements for "moderately ductile" members. Noncompact brace elements may experience premature local buckling before development of their full capacities. Braces are assessed per the section requirements set forth by AISC 341 or AISC 360 depending on the level of seismicity and Performance Level. Additionally, column and beam compactness is desirable for Immediate Occupancy performance. The width-to-thickness ratios of compression elements have been set to minimize the detrimental effects of localized buckling and subsequent fracture during repeated inelastic cycles.

The adequacy of the frame elements can be demonstrated using Tier 2 with reduced *m*-factors in consideration of reduced capacities for noncompact sections.

Noncompact members can be eliminated by adding appropriate steel plates. Stiffening elements (e.g., braced frames, shear walls, or additional moment frames) can be added throughout the building to reduce the expected frame demands.

A.3.3.1.8 NET AREA: The brace effective net area is not less than the brace gross area for hollow structural section (HSS) tube

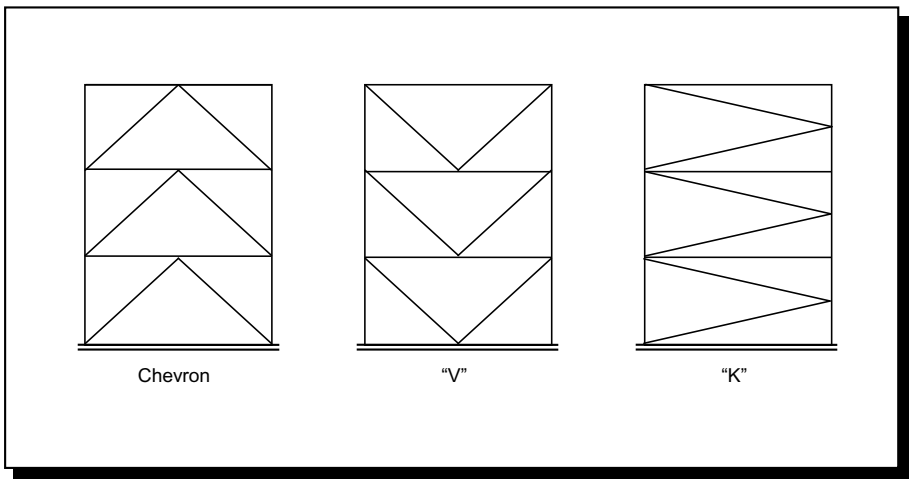

FIG. A-24. Bracing Types

and pipes sections. The concern is premature net section fracture of the brace at the connection. ASTM A53 or A500 braces (for example, pipe braces or square, rectangular, or round hollow structural section braces), where the overslot of the brace required for erection may result in a reduced section. If this section is left unreinforced, net section fracture is the governing limit state and brace ductility may be significantly reduced.

Reinforcement may be provided in the form of steel plates welded to the tube, increasing the effective area at the reduced brace section.

A.3.3.2 Concentrically Braced Frames Common types of concentrically braced frames are shown in Fig. A-24.

Braces can consist of light tension-only rod bracing, double angles, pipes, tubes, or heavy wide-flange sections.

Concrete braced frames are rare and are not permitted in some jurisdictions because it is difficult to detail the joints with the kind of reinforcing that is required for ductile behavior.

A.3.3.2.1 K-BRACING: The bracing system does not include K-braced bays. In K-brace configurations, diagonal braces intersect the column between floor levels (Fig. A-24). Where the compression brace buckles, the column is loaded with the horizontal component of the adjacent tension brace. This loading induces large midheight demands that can jeopardize the stability of the column and vertical support of the building.

In most cases, columns have not been designed to resist this force. The risk to the vertical support system makes this an undesirable bracing configuration.

Horizontal girts can be added as needed to support the tension brace when the compression brace buckles, or the bracing can be revised to another system throughout the building. The column components can be strengthened with cover plates to provide them with the capacity to fully develop the unbalanced forces created by tension brace yielding.

A.3.3.2.2 TENSION-ONLY BRACES: Tension-only braces do not comprise more than 70% of the total seismic-force-resisting capacity in structures more than two stories high. Tension-only brace systems may allow the brace to deform with large velocities during cyclic response after tension yielding cycles have occurred. Limited energy dissipation and premature fracture can significantly reduce the strength, increase the building displacements, and jeopardize the performance of the framing system.

Tension-only diagonals with inadequate strength can be strengthened using supplemental steel plates or replaced with a larger and/or different type of section. Global strength can be increased by the addition of braced bays or shear wall panels.

A.3.3.2.3 CHEVRON BRACING: Beams in chevron, or V-braced, bays are capable of resisting the vertical load resulting from the simultaneous yielding and buckling of the brace pairs. In chevron- and V-brace configurations, diagonal braces intersect the beam between columns (Fig. A-24). When the compression brace buckles, the beam is loaded with the vertical component of the adjacent tension brace. This configuration induces large midspan demands on the beam, resulting in structural damage to the beam.

Columns can be added as needed to support the tension brace when the compression brace buckles, or the bracing can be revised to another system throughout the building. The beam components can be strengthened with cover plates to provide them with the capacity to fully develop the unbalanced forces created by tension brace yielding.

A.3.3.2.4 CONCENTRICALLY BRACED FRAME JOINTS: All the diagonal braces frame into the beam–column joints concentrically. Frames that have been designed as concentrically braced frames may have local eccentricities within the joint. A local eccentricity is where the lines of action of the bracing members do not intersect the centerline of the connecting members. These eccentricities induce additional flexural and shear stresses in the members that may not have been accounted for in the design. Excessive eccentricity can cause premature yielding of the connecting members or failures in the connections, thereby reducing the strength of the frames.

A.3.3.3 Eccentrically Braced Frames Eccentrically braced frames have braces that are purposely located away from joints and connections that are intended to induce shear and flexure demands on the members. The eccentricity is intended to force a concentration of inelastic activity at a predetermined location that controls the behavior of the system. Modern eccentrically braced frames are designed with strict controls on member proportions and special out-of-plane bracing at the connections to ensure that the frame behaves as intended.

The eccentrically braced frame is recognizable by a diagonal with one end significantly offset from the joints (Fig. A-25). As with any braced frame, the function of the diagonal is to provide

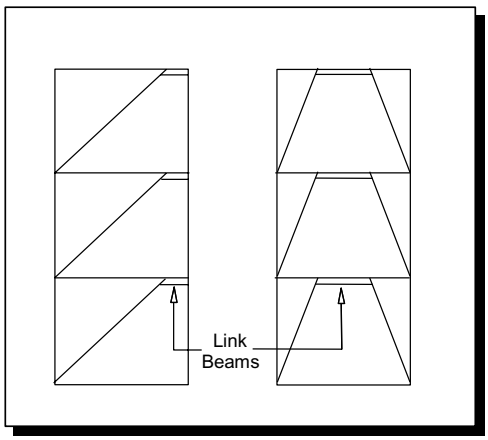

FIG. A-25. Eccentrically Braced Frames

stiffness and transmit seismic forces from the upper to the lower level. The unique feature of eccentrically braced frames is an offset zone in the beam, called the "link." The link is specially detailed for controlled yielding. This detailing is subject to very specific requirements, so an ordinary braced frame that happens to have an offset zone that looks like a link may not necessarily behave like an eccentrically braced frame.

An eccentrically braced frame has the following essential features:

- There is a link beam at one end of each brace.
- The length of the link beam is limited to control shear deformations and rotations because of flexural yielding at the ends of the link.
- The brace and the connections are designed to develop forces consistent with the strength of the link.
- Where one end of a link beam is connected to a column, the connection is a full moment connection.
- Lateral bracing is provided to prevent out-of-plane beam displacements that would compromise the intended action.

In most cases where eccentrically braced frames are used, the frames comprise the entire seismic-force-resisting system. In some tall buildings, eccentrically braced frames have been added as stiffening elements to help control drift in steel moment frames.

There are no evaluation statements for eccentrically braced frames because their history is so short, but the engineer is alerted to their possible presence in a building. For guidance in dealing with eccentrically braced frames, the evaluating engineer is referred to AISC 341. It should be noted that some of the engineers familiar with current research designed eccentrically braced frames before the initial AISC provisions were finalized in the 1990s. These frames may not satisfy all of the detailing requirements present in the current code. Any frame that was clearly designed to function as a proper eccentrically braced frame should be recognized and evaluated with due regard for any possible shortcomings that affect the intended behavior. Acceptance criteria for using the Tier 2 and Tier 3 procedures for eccentrically braced frames are provided in Chapter 9.

A.4 PROCEDURES FOR DIAPHRAGMS

This section provides guidelines for using the Tier 1 checklists and the Tier 2 deficiency-based evaluation and retrofit procedures that apply to diaphragms: general, wood, metal deck, concrete, precast concrete, horizontal bracing, and other diaphragms.

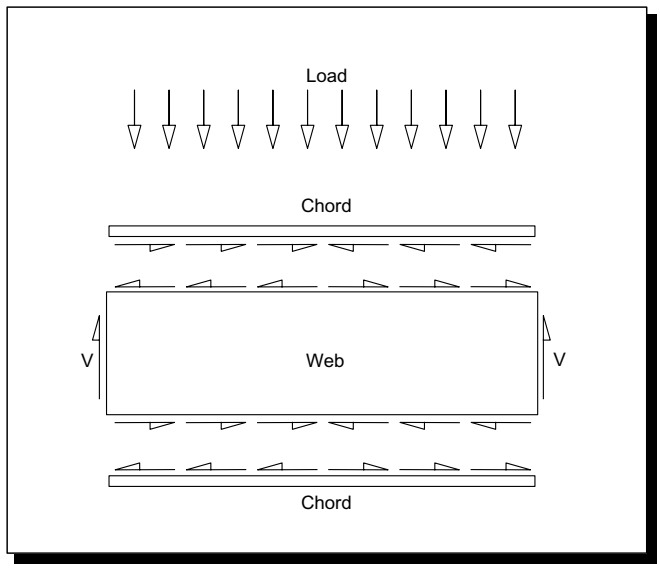

FIG. A-26. Diaphragm as a Beam

Diaphragms are horizontal elements that distribute seismic forces to the vertical elements of the seismic-force-resisting system. They also provide lateral support for walls and parapets. Diaphragm forces are derived from the self-weight of the diaphragm and the weight of the elements and components that depend on the diaphragm for lateral support. Any roof, floor, or ceiling can participate in the distribution of seismic forces to vertical elements up to the limit of its strength. The degree to which it participates depends on relative stiffness and on connections. To function as diaphragms, horizontal elements must be interconnected to transfer shear, with connections that have some degree of stiffness. An array of loose elements, such as ceiling tiles or metal deck panels attached to beams with wind clips, does not qualify.

A.4.1 General It is customary to analyze diaphragms using a beam analogy. The floor, which is analogous to the web of a wide-flange beam, is assumed to carry the shear. The edge of the floor, which could be a spandrel or wall, is analogous to the flange and is assumed to carry the flexural stress. A free-body diagram of these elements is shown in Fig. A-26. The diaphragm chord can consist of a line of edge beams that are connected to the floor or reinforcing in the edge of a slab or in a spandrel. Examples of chords are shown in Fig. A-27.

Two essential requirements for the chord are continuity and connection with the slab. Almost any building with an edge beam has a potential diaphragm chord. Even if designed for vertical loads only, the beam end connections probably have some capacity to develop horizontal forces through the column.

The force in the chord is customarily determined by dividing the beam moment in the diaphragm by the depth of the diaphragm. This step yields an upper bound on the chord force because it assumes elastic beam behavior in the diaphragm and neglects bending resistance provided by any other components of the diaphragm. A lack of diaphragm damage in postearthquake observations provides some evidence that certain diaphragms may not require specific chords as determined by the beam analogy. For the purpose of this standard, the absence of chords is regarded as a deficiency that warrants further evaluation. Consideration may be given to the available evidence regarding the suitability of the beam analogy and the need for defined chords in the building being evaluated.

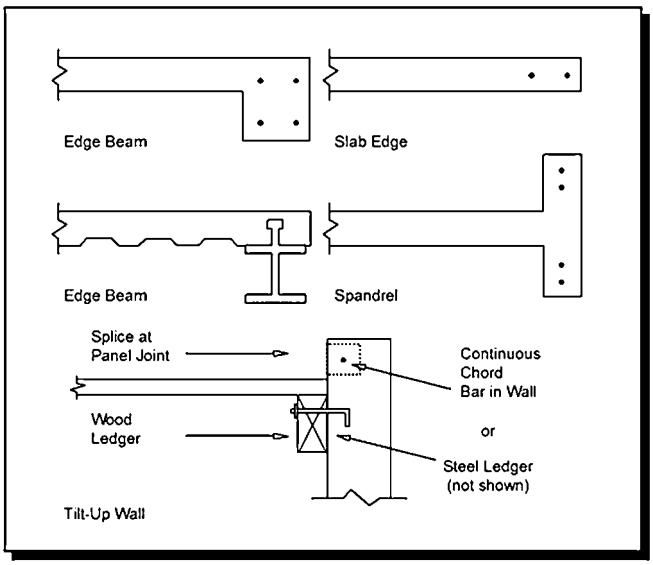

FIG. A-27. Chord Sections

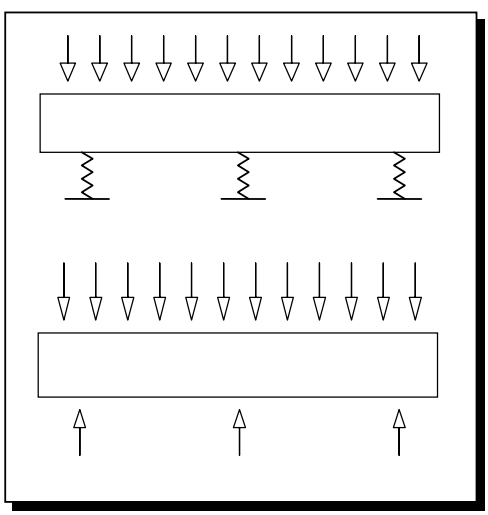

FIG. A-28. Rigid and Flexible Diaphragm

Consistent with the beam analogy, a stair or skylight opening may weaken the diaphragm just as a web opening for a pipe may weaken a beam. An opening at the edge of a floor may weaken the diaphragm just as a notch in a flange weakens a beam.

An important characteristic of diaphragms is flexibility, or its opposite, rigidity. In seismic design, rigidity means relative rigidity. Of importance is the in-plane rigidity of the diaphragm relative to the walls or frame elements that transmit the seismic forces to the ground (Fig. A-28). A concrete floor is relatively rigid compared with steel moment frames, whereas a metal deck roof is relatively flexible compared with concrete or masonry walls. Wood diaphragms are generally treated as flexible, but consideration must be given to rigidity of the vertical elements. Wood diaphragms may not be flexible compared with wood shear wall panels in a given building.

Another consideration is continuity over intermediate supports. In a three-bay building, for example, the diaphragm has three spans and four supports. If the diaphragm is relatively rigid, the chords should be continuous over the supports like flanges of a continuous beam over intermediate supports. If the diaphragm is flexible, it may be designed as a simple beam spanning between walls without consideration of continuity of the chords. In the latter case, the design professional should remember that the diaphragm is really continuous and that this continuity is simply being neglected.

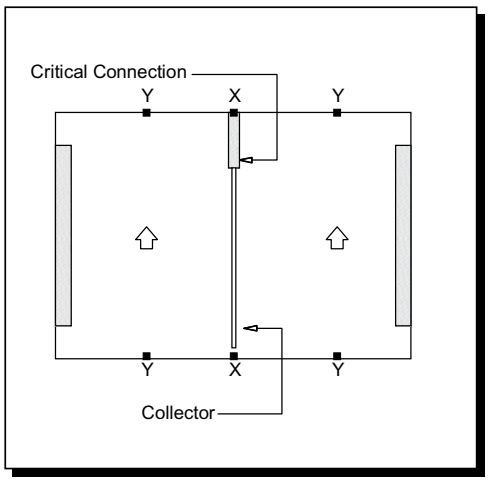

FIG. A-29. Collector

Fig. A-29 shows a diaphragm of two spans that may or may not be continuous over the intermediate support. If chord continuity is developed at the points marked X, these points are the locations of maximum chord force. If chord continuity is not provided at X, the spans act as two simple beams. The maximum chord force occurs at the middle of each span, at the points marked Y. The end rotations of the two spans may cause local damage at points X.

Finally, there must be an adequate mechanism for the transfer of diaphragm shear forces to the vertical elements. This topic is addressed in detail in Section A.5. An important element related to diaphragm force transfer is the collector, or drag strut. In Fig. A29, a member is added to collect the diaphragm shear and drag it into the short intermediate shear wall. The presence of a collector averts a concentration of stress in the diaphragm at the short shear wall. Collectors must be continuous across any interrupting elements such as perpendicular beams and must be adequately connected to the shear wall to deliver forces into the wall.

In buildings of more than one story, the design professional must consider the effect of flexible diaphragms on walls perpendicular to the direction of seismic force under consideration.

A.4.1.1 DIAPHRAGM CONTINUITY: The diaphragms are not composed of split level floors and do not have expansion joints. Split level floors and roofs, or diaphragms interrupted by expansion joints, create discontinuities in the diaphragm. This condition is common in ramped parking structures. It is a problem unless special details are used or seismic-force-resisting elements are provided at the vertical offset of the diaphragm or on both sides of the expansion joint. Such a discontinuity may cause the diaphragm to function as a cantilever element or three-sided diaphragm. If the diaphragm is not supported on at least three sides by seismic-force-resisting elements, torsional forces in the diaphragm may cause it to become unstable. In both the cantilever and three-sided cases, increased lateral deflection in the discontinuous diaphragm may cause increased damage to, or collapse of, the supporting elements.

If the load path is incomplete, mitigation with elements or connections required to complete the load path is necessary to achieve the selected Performance Level.

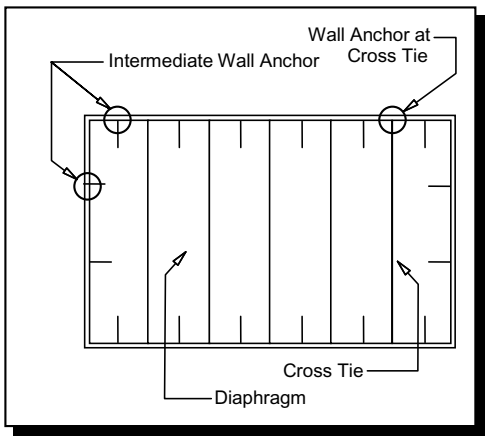

FIG. A-30. Cross Ties

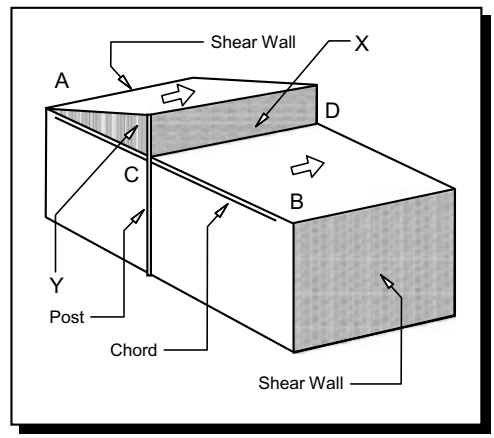

FIG. A-31. Roof Chord Continuity

The diaphragm discontinuity could be eliminated by adding new vertical elements at the diaphragm offset or the expansion joint (see FEMA 172 [1992a], Section 3.4). In some cases, special details may be used to transfer shear across an expansion joint—while still allowing the expansion joint to function—thus eliminating a diaphragm discontinuity.

A.4.1.2 CROSS TIES: There are continuous cross ties between diaphragm chords. Continuous cross ties between diaphragm chords are needed to develop out-of-plane wall forces into the diaphragm (Fig. A-30). The cross ties should have a positive and direct connection to the walls to keep the walls from separating from the building. The connection of the cross tie to the wall, and connections within the cross tie, must be detailed so that cross-grain bending or cross-grain tension does not occur in any wood member (see Section A.5.1.2).

Subdiaphragms may be used between continuous cross ties to reduce the number and length of additional cross ties.

New cross ties and wall connections can be added to resist the required out-of-plane wall forces and distribute these forces through the diaphragm. New strap plates and/or rod connections can be used to connect existing framing members together so that they function as a cross tie in the diaphragm.

A.4.1.3 ROOF CHORD CONTINUITY: All chord elements are continuous, regardless of changes in roof elevation. Diaphragms with discontinuous chords are more flexible and experience more damage around the perimeter than properly detailed diaphragms. Vertical offsets or elevation changes in a diaphragm often cause a chord discontinuity (Fig. A-31). To provide continuity, the following elements are required: a continuous chord element; seismic force resistance in plane X to connect the offset portions of the diaphragm; seismic force resistance in plane Y to develop the sloping diaphragm into the chord; and vertical supports (posts) to resist overturning forces generated by plane X.

If the load path is incomplete, mitigation with elements or connections required to complete the load path is necessary to achieve the selected Performance Level.

If members such as edge joists, blocking, or wall top plates have the capacity to function as chords but lack connection, adding nailed or bolted continuity splices provides a continuous diaphragm chord. New continuous steel or wood chord members can be added to the existing diaphragm where existing members lack sufficient capacity or no chord exists. New chord members can be placed at either the underside or topside of the diaphragm. In some cases, new vertical elements can be added to reduce the diaphragm span and stresses on any existing chord members (FEMA 172 1992a, Section 3.5.1.3, and ATC-7 1981). New chord connections should not be detailed such that they are the weakest component in the chord.

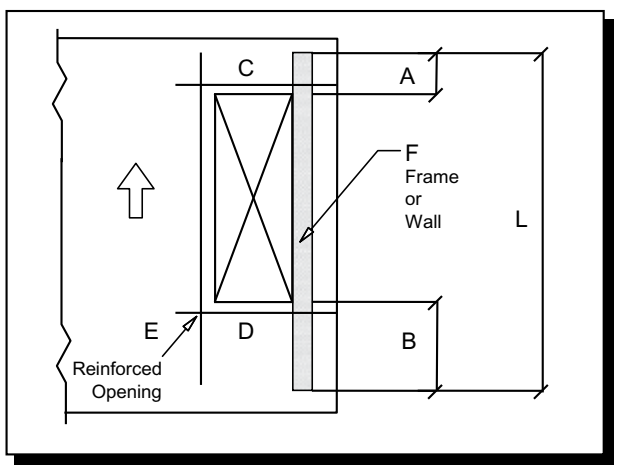

FIG. A-32. Opening at Exterior Wall

A.4.1.4 OPENINGS AT SHEAR WALLS: Diaphragm openings immediately adjacent to the shear walls are less than 25% of the wall length for Life Safety and 15% of the wall length for immediate occupancy. Large openings at shear walls significantly limit the ability of the diaphragm to transfer seismic forces to the wall (Fig. A-32). This limitation can have a compounding effect if the opening is near one end of the wall and divides the diaphragm into small segments with limited stiffness that are ineffective in transferring shear to the wall. This opening might have the net effect of a much larger opening. Large openings also may limit the ability of the diaphragm to provide out-of-plane support for the wall.

The presence of drag struts developed into the diaphragm beyond the wall helps mitigate this effect.

New diaphragm ties or chords can be added around the perimeter of existing openings to distribute tension and compression forces along the diaphragm. The existing sheathing should be nailed to the new diaphragm ties or chords. In some cases, it may also be necessary to (1) increase the shear capacity of the diaphragm adjacent to the opening by overlaying the existing diaphragm with a wood structural panel or (2) decrease the demand on the diaphragm by adding new vertical elements near the opening.

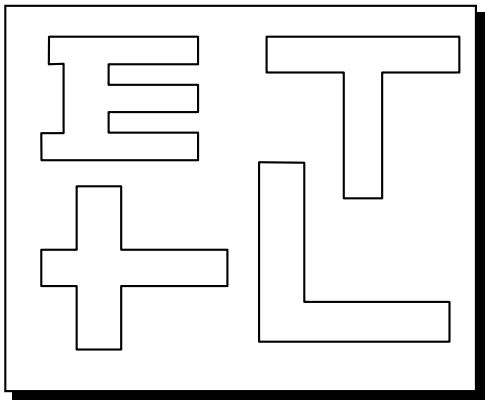

FIG. A-33. Plan Irregularities

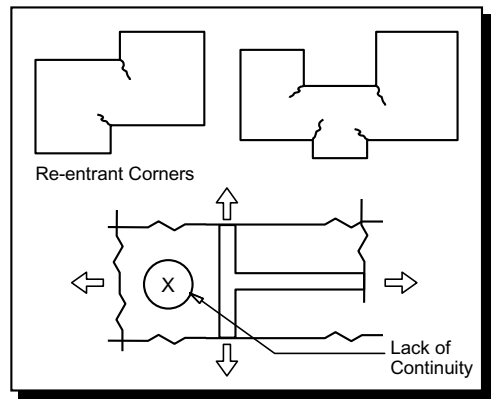

FIG. A-34. Reentrant Corners

A.4.1.5 OPENINGS AT FRAMES: Diaphragm openings immediately adjacent to the moment frames or braced frames extend less than 25% of the frame length for Life Safety and 15% of the frame length for Immediate Occupancy. Large openings at moment frames or braced frames significantly limit the ability of the diaphragm to transfer seismic forces to the frame. This limitation can have a compounding effect if the opening is near one end of the frame and divides the diaphragm into small segments with limited stiffness that are ineffective in transferring shear to the frame. This opening might have the net effect of a much larger opening.

The presence of drag struts developed into the diaphragm beyond the frame helps mitigate this effect.

Refer to Section A.4.1.4 for additional retrofit guidelines.

A.4.1.6 OPENINGS AT EXTERIOR MASONRY SHEAR WALLS: Diaphragm openings immediately adjacent to exterior masonry walls are not greater than 8 ft long for Life Safety and 4 ft long for Immediate Occupancy. Large openings at exterior masonry walls limit the ability of the diaphragm to provide out-of-plane support for the wall.

The presence of drag struts developed into the diaphragm beyond the wall helps mitigate this effect.

Refer to Section A.4.1.4 for additional retrofit guidelines.

A.4.1.7 PLAN IRREGULARITIES: There is tensile capacity to develop the strength of the diaphragm at reentrant corners or other locations of plan irregularities. Diaphragms with plan irregularities such as extending wings, plan insets, or E-, T-, X-, L-, or C-shaped configurations have reentrant corners where large tensile and compressive forces can develop (Fig. A-33). Chords and collectors in the diaphragm may not have sufficient strength at these reentrant corners to resist these tensile forces. Local damage may occur (Fig. A-34). Chord reinforcing is typically required to be developed at the reentrant corner. In some cases, the chord may be connected directly to a seismic-force-resisting element rather than developed into the diaphragm.

New chords with sufficient strength to resist the required force can be added at the reentrant corner. If a vertical seismic-force-resisting element exists at the reentrant corner, a new collector component should be installed in the diaphragm to reduce tensile and compressive forces at the reentrant corner. The same basic materials used in the diaphragm should be used for the chord.

A.4.1.8 DIAPHRAGM REINFORCEMENT AT OPENINGS: There is reinforcing around all diaphragm openings larger than 50% of the building width in either major plan dimension. Openings in diaphragms increase shear stresses and induce secondary moments in the diaphragm segments adjacent to the opening. Tension and compression forces are generated along the edges of these segments by the secondary moments and must be resisted by chord elements in the subdiaphragms around the openings.

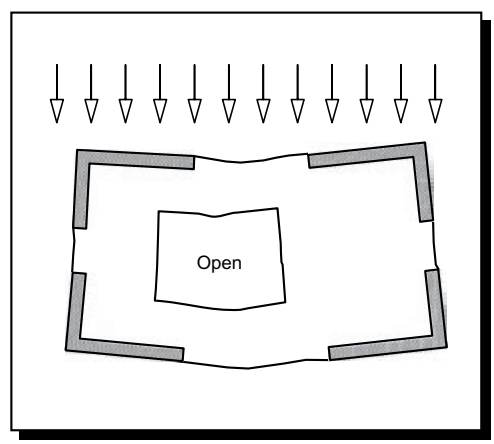

FIG. A-35. Diaphragm Opening

Openings that are small relative to the diaphragm dimensions may have only a negligible impact. Openings that are large relative to the diaphragm dimensions can substantially reduce the stiffness of the diaphragm and induce large forces around the openings (Fig. A-35).

Refer to Section A.4.1.4 for additional retrofit guidelines.

A.4.2 Wood Diaphragms

A.4.2.1 STRAIGHT SHEATHING: All straight sheathed diaphragms have aspect ratios less than 2-to-1 for Life Safety and 1-to-1 for Immediate Occupancy in the direction being considered. Straight sheathed diaphragms are flexible and weak relative to other types of wood diaphragms. Shear capacity is provided by a force couple between nails in the individual boards of the diaphragm and the supporting framing. Because of the limited strength and stiffness of these diaphragms, they are most suitable in applications with limited demand, such as in levels of low seismicity.

In levels of moderate and high seismicity, the span and aspect ratio of straight sheathed diaphragms are limited to minimize shear demands. The aspect ratio (span/depth) must be calculated for the direction being considered.

Compliance can be achieved if the diaphragm has adequate capacity for the demands in the building being evaluated.

Where the diaphragm does not have at least two nails through each board into each of the supporting members and the lateral drift and/or shear demands on the diaphragm are not excessive, the shear capacity and stiffness of the diaphragm can be increased by adding nails at the sheathing boards. This method of upgrade is most often suitable in areas of low seismicity. In other cases, a new wood structural panel should be placed over the existing straight sheathing, and the joints of the wood structural panels should be placed so that they are near the center of the sheathing boards or at a 45-degree angle to the joints between sheathing boards. Refer to FEMA 172 (1992a), Section 3.5.1.2, and ATC-7 (1981) for additional information.

New vertical elements can be added to reduce the diaphragm span-to-depth ratio. The reduction of the diaphragm span-to-depth ratio also reduces the lateral deflection and shear demand in the diaphragm. Typical construction details and methods are discussed in FEMA 172 (1992a), Section 3.4.

A.4.2.2 SPANS: All wood diaphragms with spans greater than 24 ft for Life Safety and 12 ft for Immediate Occupancy consist of wood structural panels or diagonal sheathing. Wood commercial and industrial buildings (W2) may have rod-braced systems. Long-span diaphragms often experience large lateral deflections and diaphragm shear demands. Large deflections in the diaphragm can result in increased damage or collapse of elements laterally supported by the diaphragm. Excessive diaphragm shear demands cause damage and reduced stiffness in the diaphragm.

Compliance can be demonstrated if the diaphragm and vertical-load-carrying elements can be shown to have adequate capacity at maximum deflection.

Wood commercial and industrial buildings may have rod-braced systems in lieu of wood structural panels and can be considered compliant.

New vertical elements can be added to reduce the diaphragm span. The reduction of the diaphragm span also reduces the lateral deflection and shear demand in the diaphragm. However, adding new vertical elements results in a different distribution of shear demands. Additional blocking, nailing, or other retrofit measures may need to be provided at these areas, as indicated in FEMA 172 (1992a), Section 3.4.

A.4.2.3 DIAGONALLY SHEATHED AND UNBLOCKED DIAPHRAGMS: All diagonally sheathed or unblocked wood panel diaphragms have horizontal spans less than 40 ft for Life Safety and 30 ft for Immediate Occupancy and aspect ratios less than or equal to 4-to-1 for Life Safety and 3-to-1 for Immediate Occupancy. Wood structural panel diaphragms may not have blocking below unsupported panel edges. Blocking may be necessary at diaphragm boundaries to prevent premature failure caused by joist rolling. The shear capacity of diagonally sheathed or unblocked diaphragms is less than that of fully blocked wood structural panel diaphragms because of the limited ability for direct shear transfer at unsupported panel edges. The span and aspect ratio of diaphragms is limited to minimize shear demands. The aspect ratio (span/depth) must be calculated for the direction being evaluated.

Compliance can be demonstrated if the diaphragm can be shown to have adequate capacity for the demands in the building being evaluated.

The shear capacity of unblocked diaphragms can be improved by adding new wood blocking and nailing at the unsupported panel edges. Placing a new wood structural panel over the existing diaphragm increases the shear capacity. Both of these methods require the partial or total removal of existing flooring or roofing to place and nail the new overlay or nail the existing panels to the new blocking. Strengthening of the diaphragm is usually not necessary at the central area of the diaphragm where shear is low. In certain cases where the design forces are low, it may be possible to increase the shear capacity of unblocked diaphragms with sheet metal plates stapled on the underside of the existing wood panels. These plates and staples must be designed for all related shear and torsion caused by the details related to their installation.

A.4.3 Metal Deck Diaphragms Bare metal deck can be used as a roof diaphragm where the individual panels are adequately fastened to the supporting framing. The strength of the diaphragm depends on the profile and gauge of the deck and the layout and size of the welds or fasteners. Allowable shear capacities for metal deck diaphragms are usually obtained from approved test data and analytical work developed by the industry.

Metal decks used in floors generally have concrete fill. In cases with structural concrete fill, the metal deck is considered to be a concrete form and the diaphragm is treated as a reinforced concrete diaphragm. In some cases, however, the concrete fill is not structural. It may be a topping slab or an insulating layer that is used to encase conduits or provide a level wearing surface. This type of construction is considered to be an untopped metal deck diaphragm with a capacity determined by the metal deck alone. Nonstructural topping, however, is somewhat beneficial and has a stiffening effect on the metal deck.

Metal deck diaphragm behavior is limited by buckling of the deck and by the attachment to the framing. Weld quality can be an issue because welding of light-gauge material requires special consideration. Care must be taken during construction to ensure that the weld has proper fusion to the framing but did not burn through the deck material.

Concrete-filled metal decks generally make excellent diaphragms and usually are not a problem as long as the basic requirements for chords, collectors, and reinforcement around openings are met. However, the evaluating engineer should look for conditions that can weaken the diaphragm, such as troughs, gutters, and slab depressions that can have the effect of short-circuiting the system or of reducing the system to the bare deck.

A.4.3.1 NONCONCRETE FILLED DIAPHRAGMS: Untopped metal deck diaphragms or metal deck diaphragms with fill other than concrete consist of horizontal spans of less than 40 ft and have aspect ratios less than 4-to-1. Untopped metal deck diaphragms have limited strength and stiffness. Long-span diaphragms with large aspect ratios often experience large lateral deflections and high diaphragm shear demands. This situation is especially true for aspect ratios greater than 4-to-1.

In levels of moderate and high seismicity, the span and aspect ratio of untopped metal deck diaphragms are limited to minimize shear demands. The aspect ratio (span/depth) must be calculated for the direction being considered.

Compliance can be achieved if the diaphragm has adequate capacity for the demands in the building being evaluated.

A.4.4 Concrete Diaphragms Concrete slab diaphragm systems have demonstrated good performance in past earthquakes. Building damage is rarely attributed to a failure of the concrete diaphragm itself, but rather to failure in related elements in the load path, such as collectors or connections between diaphragms and vertical elements. These issues are addressed elsewhere in this standard. The design professional should assess concrete diaphragms for general evaluation statements that address con-

figuration, irregularities, openings, and load path. The design professional also should carefully assess pan joist systems and other systems that have thin slabs.

A.4.5 Precast Concrete Diaphragms Precast concrete diaphragms consist of horizontal precast elements that may or may not have a cast-in-place topping slab. Precast elements may be precast planks laid on top of framing or precast T-sections that consist of both the framing and the diaphragm surface cast in one piece.

Because of the brittle nature of the connections between precast elements, special attention should be paid to eccentricities, adequacy of welds, and length of embedded bars. If a topping slab is provided, it should be capable of taking all the shear. Welded steel connections between precast elements, with low rigidity relative to the concrete topping, do not contribute significantly to the strength of the diaphragm where a topping slab is present.

A.4.5.1 TOPPING SLAB: Precast concrete diaphragm elements are interconnected by a continuous reinforced concrete topping slab with a minimum thickness of 2 in. Precast concrete diaphragm elements may be interconnected with welded steel inserts. These connections are susceptible to sudden failure such as weld fracture, pullout of the embedment, or spalling of the concrete. Precast concrete diaphragms without topping slabs may be susceptible to damage unless they were specifically detailed with connections capable of yielding or of developing the strength of the connected elements.

In precast construction, topping slabs may have been poured between elements without consideration for providing continuity. The topping slab may not be fully effective if it is interrupted at interior walls. The presence of dowels or continuous reinforcement is needed to provide continuity.

Where the topping slab is not continuous, an evaluation considering the discontinuity is required to ensure a complete load path for shear transfer, collectors, and chords.

A.4.6 Horizontal Bracing Horizontal bracing usually is found in industrial buildings. These buildings often have very little mass, so wind considerations govern over seismic considerations. The wind design is probably adequate if the building shows no signs of distress. If bracing is present, the design professional should look for a complete load path with the ability to collect all tributary forces and deliver them to the walls or frames. Horizontal rod bracing should be investigated for eccentricities at the connections and sagging or looseness in the rods.

A.4.7 Other Diaphragms

A.4.7.1 OTHER DIAPHRAGMS: Diaphragms do not consist of a system other than wood, metal deck, concrete, or horizontal bracing. In some codes and standards, there are procedures and allowable diaphragm shear capacities for diaphragms not covered by this standard. Examples include thin planks and gypsum toppings, but these systems are brittle and have limited strength. As such, they may not be desirable elements in the seismic-force-resisting system. Another example is standing seam roofs or other metal roof systems that are designed to move to minimize thermal stresses. For seismic loading in certain directions, such roofs may not provide a diaphragm load path.

The design professional should be watchful for systems that look like diaphragms but may not have the strength, stiffness, or interconnection between elements necessary to perform the intended function.

A.5 PROCEDURES FOR CONNECTIONS

This section provides guidelines for using the Tier 1 checklists and the Tier 2 deficiency-based evaluation and retrofit procedures that apply to structural connections: anchorage for normal forces, shear transfer, vertical components, interconnection of elements, and panel connections.

A.5.1 Anchorage for Normal Forces

A.5.1.1 WALL ANCHORAGE: Exterior concrete or masonry walls, which are dependent on the diaphragm for lateral support, are anchored for out-of-plane forces at each diaphragm level with steel anchors, reinforcing dowels, or straps that are developed into the diaphragm. Connections have adequate strength to resist the connection force calculated in the Quick Check procedure of Section 4.5.3.7. Bearing walls that are not positively anchored to the diaphragms may separate from the structure, causing partial collapse of the floors and roof. Nonbearing walls that separate from the structure may represent a significant falling hazard. The hazard amplifies with the height above the building base. Amplification of the ground motion used to estimate the wall anchorage forces depends on the type and configuration of both the walls and the diaphragms, as well as the type of soil. Anchorage forces must be fully developed into the diaphragm to prevent pullout failure of the anchor or local failure of the diaphragm (Fig. A-36).

If the anchorage is nonexistent, mitigation with elements or connections needed to anchor the walls to the diaphragms is necessary to achieve the selected Performance Level.

To account for identified deficiencies, wall anchors can be added. Complications that may result from inadequate anchorage include cross-grain tension in wood ledgers or failure of the diaphragm-to-wall connection caused by (1) insufficient strength, number, or stability of anchors; (2) inadequate embedment of anchors; (3) inadequate development of anchors and straps into the diaphragm; and (4) deformation of anchors and their fasteners that permit diaphragm boundary connection pullout, or cross-grain tension in wood ledgers.

Existing anchors should be tested to determine load capacity and deformation potential, including fastener slip, according to the requirements in this standard. Special attention should be given to the testing procedure to maintain a high level of quality control. Additional anchors should be provided as needed to supplement those that fail the test, as well as those needed to meet the criteria of this standard. The quality of the retrofit depends greatly on the quality of the performed tests.

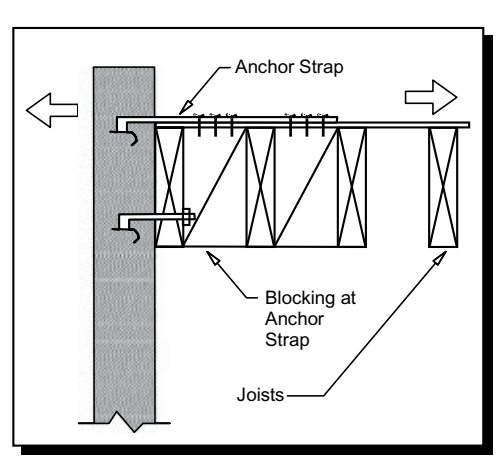

FIG. A-36. Wall Anchorage

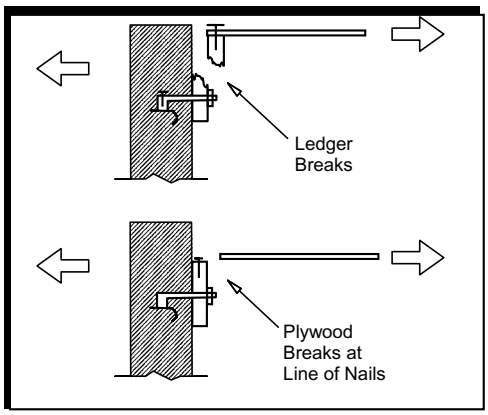

FIG. A-37. Wood Ledgers

A.5.1.2 WOOD LEDGERS: The connection between the wall panels and the diaphragm does not induce cross-grain bending or tension in the wood ledgers. Wood members in general have very little resistance to tension applied perpendicular to grain. Connections that rely on cross-grain bending in wood ledgers induce tension perpendicular to grain. Failure caused by cross-grain bending results in the ledger breaking (Fig. A-37, top). Another significant failure mode caused by inadequate wall anchorage is the sheathing breaking at the line of nails (Fig. A-37, bottom). Failure of such connections is sudden and nonductile and can result in loss of bearing support and partial collapse of the floors and roof.

Mitigation with elements or connections needed to provide wall anchorage without inducing cross-grain bending is necessary to achieve the selected Performance Level.

A.5.1.3 MINUMUM NUMBER OF WALL ANCHORS PER PANEL: There are at least two anchors from each precast wall panel into the diaphragm elements. At least two connections between each panel and the diaphragm are required for basic stability of the wall panel for out-of-plane forces. Many connection configurations are possible, including one anchor supporting two adjacent panels.

A single anchor, or line of anchors, near the panel center of mass should be evaluated for an accidental eccentricity of 5% of the critical panel dimension, as a minimum.

A.5.1.4 STIFFNESS OF WALL ANCHORS: Anchors of concrete or masonry walls to wood structural elements are installed taut and are stiff enough to limit the relative movement between the wall and the diaphragm to no greater than 1/8 in. before engagement of the anchors. The concern is that flexibility or slip in wall anchorage connections requires relative movement between the wall and structure before the anchor is engaged. This relative movement can induce forces in elements not intended to be part of the load path for out-of-plane forces. It can be enough to cause a loss of bearing at vertical supports, or it can induce cross-grain bending in wood ledger connections.

Compliance can be demonstrated if the movement has no detrimental effect on the connections. Forces generated by any additional eccentricity at bearing supports should be considered.

A.5.2 Shear Transfer

The transfer of diaphragm shears into shear walls and frames is a critical element in the load path for seismic force resistance. If the connection is inadequate or nonexistent, the ability of the walls and frames to receive seismic forces is limited and the overall seismic force resistance of the building is reduced.

A.5.2.1 TRANSFER TO SHEAR WALLS OR CONCRETE AND INFILL FRAMES: Diaphragms are connected for transfer of seismic forces to the shear walls for Life Safety, and the connections are able to develop the lesser of the shear strength of the walls or diaphragms for Immediate Occupancy. The floor or roof diaphragms must be connected to the shear walls or concrete to provide a complete load path for the transfer of diaphragm shear forces to the walls or frames. Where the wall or frame does not extend the full depth of the diaphragm, this connection may include collectors or drag struts. Collectors and drag struts must be continuous across intersecting framing members and must be adequately connected to the wall to deliver high tension and compression forces at a concentrated location.

In the case of frame buildings with infill walls (Building Types S5, S5a, C3, and C3a), the seismic performance is dependent on the interaction between the frame and infill, and the behavior is more like that of a shear wall building. The load path between the diaphragms and the infill panels is most likely through the frame elements, which also may act as drag struts and collectors. In this case, the evaluation statement is addressing the connection between the diaphragm and the frame elements.

If the connection is nonexistent, mitigation with elements or connections needed to transfer diaphragm shear to the shear walls is necessary to achieve the selected Performance Level.

Collector members, splice plates, and shear transfer devices can be added as required to deliver collector forces to the shear wall. Adding shear connectors from the diaphragm to the wall and/or to the collectors transfers shear. See FEMA 172 (1992a), Section 3.7 for wood diaphragms, Section 3.7.2 for concrete diaphragms, Section 3.7.3 for poured gypsum, and Section 3.7.4 for metal deck diaphragms.

A.5.2.2 TRANSFER TO STEEL FRAMES: Diaphragms are connected for transfer of loads to the steel frames for Life Safety, and the connections are able to develop the lesser of the strength of the frames or the diaphragms for Immediate Occupancy. The floor and roof diaphragms must be adequately connected to the steel frames to provide a complete load path for shear transfer between the diaphragms and the frames. This connection may consist of shear studs or welds between the metal deck and steel framing. In older construction, steel framing may be encased in concrete. Direct force transfer between concrete and steel members by shear friction concepts should not be used unless the members are completely encased in concrete.

If the connection is nonexistent, mitigation with elements or connections needed to transfer diaphragm shear to the steel frames is necessary to achieve the selected Performance Level.

Adding collectors and connections to the diaphragm transfers forces to the frames. Connections can be provided along the collector length and at the collector-to-frame connection to withstand the calculated forces. See FEMA 172 (1992a), Sections 3.7.5 and 3.7.6.

A.5.2.3 TOPPING SLAB TO WALLS OR FRAMES: Reinforced concrete topping slabs that interconnect the precast concrete diaphragm elements are doweled for transfer of forces into the shear wall or frame elements for Life Safety, and the dowels are able to develop the least of the shear strength of the walls, frames, or slabs for Immediate Occupancy. The topping slabs at each floor or roof must be connected to the shear walls or frame elements to provide a complete load path for the transfer of diaphragm shear forces to

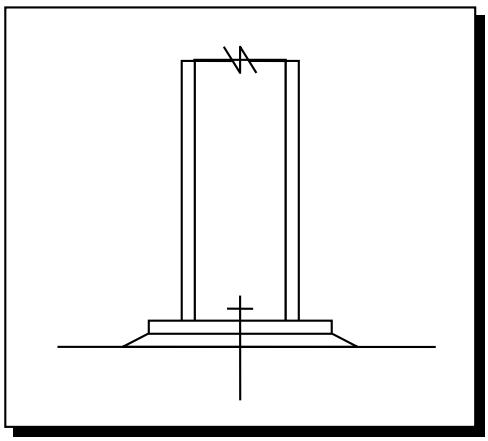

FIG. A-38. Steel Column Connection

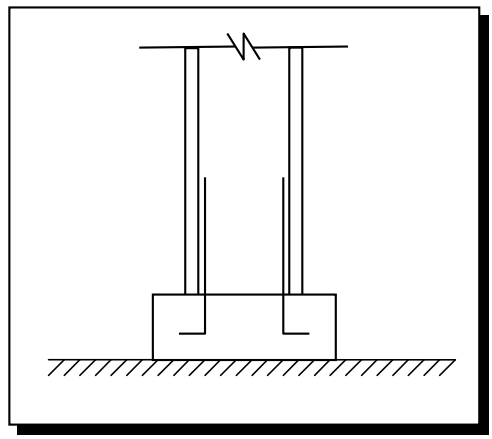

FIG. A-39. Column Doweled into Foundation

the vertical elements. Welded inserts between precast floor or roof elements are susceptible to weld fracture and spalling and are likely not adequate to transfer these forces alone.

If a direct topping slab connection is nonexistent, mitigation with elements or connections needed to transfer diaphragm shear to the vertical elements is necessary to achieve the selected Performance Level.

See Sections A.5.2.1 and A.5.2.2 for additional retrofit guidelines.

A.5.3 Vertical Components The following statements reflect a number of common concerns related to inadequate connections between elements. For example, members may be incapable of transferring seismic forces into the foundation or may be displaced where uplifted, resulting in reduced support for vertical loads. A potential deficiency common to all of the following statements would be a nonexistent connection.

A.5.3.1 STEEL COLUMNS: The columns in seismic-force-resisting frames are anchored to the building foundation for Life Safety in all levels of seismicity and Immediate Occupancy for very low seismicity, and the anchorage is able to develop the least of the tensile capacity of the column, the tensile capacity of the lowest level column splice (if any), or the uplift capacity of the foundation, for Immediate Occupancy In low, moderate, and high seismicity. Steel columns that are part of the seismic-force-resisting system must be connected for the transfer of uplift and shear forces at the foundation (Fig. A-38). The absence of a substantial connection between the columns and the foundation may allow the column to uplift or slide off of bearing supports, which may limit the ability of the columns to support vertical loads or resist seismic forces.

As an upper-bound limit for the Immediate Occupancy Performance Level, the connection is checked for the tensile capacity of the column, column splice, or the foundation, whichever is the weak link in the load path between the superstructure and the supporting soil. It could be the uplift capacity of the pile, the connection between the pile and the cap, or the foundation dead load that can be activated by the column, the column tensile capacity, or the splice capacity.

If the connection is nonexistent, mitigation with elements or connections needed to anchor the vertical elements to the foundation is necessary to achieve the selected Performance Level.

A.5.3.2 CONCRETE COLUMNS: All concrete columns are doweled into the foundation with a minimum of four bars for Life Safety, and the dowels are able to develop the tensile capacity of reinforcement in columns of the seismic-force-resisting system for Immediate Occupancy. Concrete columns that are part of the seismic-force-resisting system must be connected for the transfer of uplift and shear forces to the foundation (Fig. A-39). The absence of a substantial connection between the columns and the foundation may allow the column to uplift or slide off of bearing supports, which limits the ability of the columns to support vertical loads or resist seismic forces. Typically, at a minimum, the four corner bars of the column should be doweled into the foundation.

If the connection is nonexistent, mitigation with elements or connections needed to anchor the vertical elements to the foundation is necessary to achieve the selected Performance Level.

If concrete columns lack dowels, a concrete curb can be installed adjacent to the column by drilling dowels and installing anchors into the wall that lap with dowels installed in the slab or footing. However, this curb can cause significant architectural problems.

A.5.3.3 WOOD POSTS: There is a positive connection of wood posts to the foundation. Typically, the bases of wood posts are connected to a wood block embedded in a concrete footing. The use of two or more toenails connecting the post to the block is considered to be the minimum positive connection.

The absence of a substantial connection between the wood posts and the foundation may allow the posts to slide off of bearing supports as the structure drifts in an earthquake.

Mitigation with elements or connections needed to anchor the posts to the foundation is necessary to achieve the selected Performance Level.

Wood posts can be anchored to concrete slabs or footings using expansion anchors and clip angles.

A.5.3.4 WOOD SILLS: All wood sills are bolted to the foundation. The absence of a connection between the wood sills and the foundation is a gap in the load path that limits the ability of the shear walls to resist seismic forces. Structures may potentially slide off foundation supports.

Where some, but not all, of the sill plates have been bolted or the sill is attached by shot pins or other types of shear connections, an evaluation can be performed to check the adequacy of existing elements. The evaluation should consider only those elements located below shear-resisting elements of the seismic-force-resisting system.

Mitigation with elements or connections needed to anchor the sills to the foundation is necessary to achieve the selected Performance Level. Expansion anchors or epoxy anchors can be installed by drilling through the wood sill to the concrete foundation.

A.5.3.5 FOUNDATION DOWELS: Wall reinforcement is doweled into the foundation with vertical bars equal to the size and spacing to the vertical walls reinforcing immediately above the foundation for Life Safety, and the dowels are able to develop the lesser of the strength of the walls or the uplift capacity of the foundation for Immediate Occupancy. The absence of an adequate connection between the shear walls and the foundation is a gap in the load path that limits the ability of the shear walls to resist seismic forces.

If the connection is nonexistent or if the size and spacing of the dowels is less than the vertical reinforcing in the walls, the capacity of the dowels to transfer the required forces should be evaluated and mitigation with elements or connections needed to anchor the walls to the foundation may be necessary to achieve the selected Performance Level.

If the concrete or masonry walls lack dowels, a concrete curb can be installed adjacent to the wall or column by drilling dowels and installing anchors into the wall that lap with dowels installed in the slab or footing. However, this curb can cause significant architectural problems.

A.5.3.6 PRECAST WALL PANELS: Precast wall panels are connected to the foundation for Life Safety, and the connections are able to develop the strength of the walls for Immediate Occupancy. The absence of an adequate connection between the precast wall panels and the foundation is a gap in the load path that limits the ability of the panels to resist seismic forces.

If the connection is nonexistent, mitigation with elements or connections needed to anchor the precast walls to the foundation is necessary to achieve the selected Performance Level.

If precast walls lack adequate connections, a concrete curb can be installed adjacent to the wall by drilling dowels and installing anchors into the wall that lap with dowels installed in the slab or footing. However, this curb can cause significant architectural problems. Alternatively, steel angles may be used with drilled anchors.

A.5.3.7 WOOD SILL BOLTS: Sill bolts are spaced at 6 ft or less for Life Safety and 4 ft or less for Immediate Occupancy, with proper edge and end distance provided for wood and concrete. The absence of an adequate connection between the wood sills and the foundation is a gap in the load path that limits the ability of the shear walls to resist seismic forces. Structures may slide off foundation supports.

Sill bolt spacing has been limited in moderate and high seismic zones to limit the demand on individual bolts. Compliance can be demonstrated if the existing bolts are adequate to resist the demands in the building being evaluated.

To improve wood sill anchorage, expansion anchors or epoxy anchors can be installed by drilling through the wood sill to the concrete foundation.

A.5.3.8 UPLIFT AT PILE CAPS: Pile caps have top reinforcement and piles are anchored to the pile caps for Life Safety, and the pile cap reinforcement and pile anchorage are able to develop the tensile capacity of the piles for Immediate Occupancy. Pile foundations may have been designed considering downward gravity loads only. A potential problem is a lack of top reinforcement in the pile cap and a lack of a positive connection between the piles and the pile cap. The piles may be socketed into the cap without any connection to resist tension.

Seismic forces may induce uplift at the foundation that must be delivered into the piles for overturning stability. The absence of top reinforcement means the pile cap cannot distribute the uplift forces to the piles. The absence of pile tension connections means that the forces cannot be transferred to the piles. Piles also should be checked for confinement and spacing of ties and spirals.

Typically, deficiencies in the load path at the pile caps are not a life safety concern. However, if the design professional has determined that there is a strong possibility of a life safety hazard because of this deficiency, piles and pile caps may be modified, supplemented, repaired, or in the most severe condition, replaced in their entirety. Alternatively, the building system may be retrofitted such that the pile caps are protected.

A.5.4 Interconnection of Elements

A.5.4.1 GIRDER–COLUMN CONNECTION: There is a positive connection using plates, connection hardware, or straps between the girder and the column support. The absence of a substantial connection between the girders and supporting columns may allow the girders to slide off bearing supports as the structure deforms in an earthquake.

Mitigation with elements or connections needed to connect the girders and columns is necessary to achieve the selected performance.

Bearing length conditions can be addressed by adding bearing extensions.

A.5.4.2 GIRDERS: Girders supported by walls or pilasters have at least two ties securing the anchor bolts unless provided with independent stiff wall anchors with adequate strength to resist the connection force calculated in the Quick Check procedure of Section 4.5.3.7. Girders supported on wall pilasters may be required to resist wall out-of-plane forces. Without adequate confinement, anchor bolts may pull out of the pilaster (Fig. A-40). The potential for the pilaster to spall can lead to reduced bearing area or loss of bearing support for the girder.

Where there is concern about lack of pilaster ties, the existing reinforcing must be exposed and the connection must be modified as necessary. For out-of-plane forces, the number of column ties can be increased by jacketing the pilaster or, alternatively, by developing a second load path for the out-of-plane forces.

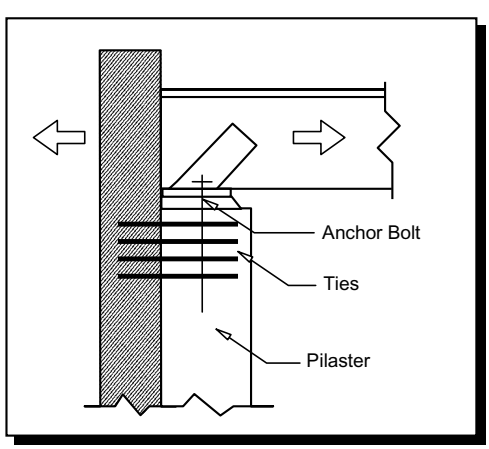

FIG. A-40. Girder Anchorage

A.5.4.3 CORBEL BEARING: If the frame girders bear on column corbels, the length of bearing is greater than 3 in. If drifts are sufficiently large, girders can slide off bearing supports without adequate length. At maximum drift, the bearing support may experience additional eccentricity not considered in the design. The support should be evaluated for strength at this extreme condition.

A.5.4.4 CORBEL CONNECTIONS: The frame girders are not connected to corbels with welded elements. Precast elements that are interconnected at the supports may develop unintended frame action and attract seismic forces. The concern is that the welded connections are unable to develop the strength of the members and are subject to sudden nonductile failure, possibly leading to partial collapse of the floor or roof.

Connections may be in compliance if failure of the connection does not jeopardize the vertical support of the girder.

A.5.4.5 BEAM, GIRDER, AND TRUSS SUPPORTS: Beams, girders, and trusses supported by unreinforced masonry walls or pilasters have independent secondary columns for support of vertical loads. Loss of masonry capacity caused by seismic forces also results in loss of vertical support without a secondary gravity system.

A.5.5 Panel Connections

A.5.5.1 ROOF PANELS: Metal, plastic, or cementitious roof panels are positively attached to the roof framing to resist seismic forces. The absence of a positive connection between metal, fiberglass, or cementitious panels and the roof framing is a gap in the load path that limits the ability of the panels to act as a diaphragm.

Panels not intended to be a part of the diaphragm represent a potential falling hazard if not positively attached to the framing. In this case, the evaluation should be limited to the anchorage forces and connections of the panels. Consideration should be given to the ability of the connections to resist the deformations imposed by building movements.

If the connection is nonexistent, mitigation with elements or connections needed to attach the roof panels is necessary to achieve the selected Performance Level.

It may be possible to improve the connection between the roof and the framing. If architectural or occupancy conditions warrant, the roof diaphragm can be replaced with a new one. Alternatively, a new diaphragm may be added using rod braces or wood structural panels above or below the existing roof, which remains in place.

A.5.5.2 WALL PANELS: Metal, fiberglass, or cementitious wall panels are positively attached to the framing to resist seismic forces. The absence of a positive connection between metal, fiberglass, or cementitious panels and the framing is a gap in the load path that limits the ability of the panels to resist seismic forces.

Panels not intended to be a part of the seismic-force-resisting system represent a potential falling hazard if not positively attached to the framing. In this case, the evaluation should be limited to the anchorage forces and connections of the panels. Consideration should be given to the ability of the connections to resist the deformations imposed by building movements.

If the connection is nonexistent, mitigation with elements or connections needed to attach the panels is necessary to achieve the selected Performance Level.

A.6 PROCEDURES FOR GEOLOGIC SITE HAZARDS AND FOUNDATIONS

This section provides guidelines for using the Tier 1 checklists and the Tier 2 deficiency-based evaluation and retrofit procedures that apply to foundations and supporting soils: geologic site hazards, condition of foundations, and capacity of foundations.

A thorough seismic evaluation of an existing building should include an examination of the foundation, an assessment of the capability of the soil beneath the foundation to withstand the forces applied during an earthquake, and consideration of nearby geologic hazards that may affect the stability of the building during an earthquake.

To fully assess the potential hazard presented by local geologic site conditions, and to establish soil engineering parameters required for analysis of these hazards, it may be necessary to consult with a geotechnical design professional. The evaluating design professional is strongly urged to seek consultation with appropriate professionals wherever site conditions are beyond the experience or expertise of the design professional.

A.6.1 Geologic Site Hazards Certain geologic and local site conditions can lead to structural damage in the event of an earthquake. Large foundation movements due to any number of causes can severely damage an otherwise seismic-resistant building. Potential causes of significant foundation movement include settlement or lateral spreading caused by liquefaction, slope failure, or surface ruptures. An evaluation of the building should include consideration of these effects and the effect they might have on the superstructure.

Retrofit of structures subject to Life Safety hazards from ground failures is impractical unless site hazards can be mitigated to the point where acceptable performance can be achieved. Not all ground failures need necessarily be considered as Life Safety hazards. For example, in many cases liquefaction beneath a building does not pose a Life Safety hazard; however, related lateral spreading can result in collapse of buildings with inadequate foundation strength. For this reason, the liquefaction potential and the related consequences should be thoroughly investigated for sites that do not satisfy the requirements of this standard. Further information on the evaluation of site hazards is provided in Chapter 8.

A.6.1.1 LIQUEFACTION: Liquefaction-susceptible, saturated, loose granular soils that could jeopardize the building's foundation support and seismic performance do not exist in the foundation soils at depths within 50 ft under the building. Soils susceptible to liquefaction may lose all vertical-load-bearing capacity during an earthquake. Loss of vertical support for the foundation causes large differential settlements and induces large forces in the building superstructure.

These forces are concurrent with all existing gravity loads and seismic forces during the earthquake.

A.6.1.2 SLOPE FAILURE: The building site is sufficiently remote from potential earthquake-induced slope failures or rockfalls to be unaffected by such failures or is capable of accommodating any predicted movements without failure. Steep slopes are susceptible to slides during an earthquake. Slope failures are possible in rock or on other nonliquefiable soils on slopes that normally exceed 6%. Slopes that exhibit signs of prior landslides require the most attention.

The concern for buildings on the uphill side of slopes is lateral spreading of the downhill footings. The concern for buildings on the downhill side is impact from sliding soil and debris.

A.6.1.3 SURFACE FAULT RUPTURE: Surface fault rupture and surface displacement at the building site is not anticipated. In the near field of active faults, there is a potential for large fissures and differential movement to occur in the surface soils. Foundations of buildings located above these ruptures are subjected to large differential movements that induce large forces in the building superstructure.

These forces are concurrent with all existing gravity loads and seismic forces during the earthquake.

A.6.2 Foundation Configuration Building foundation elements normally have a capacity at least two times the gravity loads. If there are no signs of foundation distress caused by settlement, erosion, corrosion, or other reasons, the foundations are likely to have adequate vertical capacity if the total gravity and seismic overturning forces do not exceed the allowable static capacity by more than a factor of 2.0.

Foundations are considered to have adequate lateral capacity if the horizontal resistance of the foundation system exceeds the calculated seismic forces in Chapter 4 or 5 with horizontal resistance at the foundation treated as a force-controlled action.

Where the evaluation of foundation elements indicates significant problems, the evaluating design professional should consult with a qualified geotechnical design professional to establish rational criteria for foundation analysis and mitigation of unsatisfactory conditions.

The correction of seismic deficiencies in the foundations of existing buildings is expensive and may not be justified by more realistic analysis procedures. For this reason, the Tier 3 systematic retrofit procedure is recommended for these cases.

A.6.2.1 OVERTURNING: The ratio of the horizontal dimension of the seismic-force-resisting system at the foundation level to the building height (base/height) is greater than $0.6S_a$. The concentration of seismic overturning forces in foundation elements may exceed the capacity of the soil, the foundation structure, or both. The effective horizontal dimension should be determined based on the ability of the seismic-force-resisting elements to act as a system. Therefore, the building dimension can be used if the elements are well connected. However, multiple checks may be required for elements isolated on opposite sides of the building.

For shallow foundations, the shear and moment capacity of the foundation elements should be evaluated for adequacy to resist calculated seismic forces. The vertical bearing pressure of the soil under seismic loading conditions caused by the total gravity and overturning forces should be calculated and compared with two times the allowable static bearing pressure. For deep foundations, the ultimate vertical capacity of the pile or pier under seismic forces should be determined. The foundation capacity should then be compared with the demands caused by gravity loads plus overturning.

Existing foundations can be strengthened as needed to resist overturning forces. Spread footings may be enlarged, or additional piles, rock anchors, or piers may be added to deep foundations. It may also be possible to use grade beams or new wall elements to spread out overturning forces over a greater distance. Adding new seismic-force-resisting elements reduces overturning effects of existing elements.

A.6.2.2 TIES BETWEEN FOUNDATION ELEMENTS: The foundation has ties adequate to resist seismic forces where footings, piles, and piers are not restrained by beams, slabs, or soils classified as Class A, B, or C. Ties between discrete foundation elements, such as pile caps and pole footings, are required where the seismic ground motions are likely to cause significant lateral spreading of the foundations. Ties may consist of tie beams, grade beams, or slabs. If the foundations are restrained laterally by competent soils or rock, ties are not required.

A.6.2.3 DEEP FOUNDATIONS: Piles and piers are capable of transferring the seismic forces between the structure and the soil. Common problems include flexural strength and ductility of the upper portions of piles or piers, or at the connection to the cap. Distinct changes in soil stiffness can create high bending stresses along the length of the pile.

For concrete piles, the design professional should check for a minimal amount of longitudinal reinforcement in the upper portion of piles or piers, and for hoops or ties immediately beneath the caps. The design professional also should check for confining transverse reinforcement wherever bending moments might be high along the length of the pile, including changes in soil stiffness.

The correction of seismic deficiencies in the deep foundations of existing buildings is expensive and may not be required by taking advantage of more rigorous analysis procedures. For this reason, the Tier 3 systematic evaluation or retrofit procedure is recommended for these cases.

A.6.2.4 SLOPING SITES: The difference in foundation embedment depth from one side of the building to another does exceed one story high. The transfer of seismic force is more difficult where a permanent horizontal force is present.

The correction of seismic deficiencies in the foundations of existing buildings is expensive and may not be required by taking advantage of more rigorous analysis procedures. For this reason, the Tier 3 systematic retrofit procedure is recommended for these cases.

A.7 PROCEDURES FOR NONSTRUCTURAL COMPONENTS

This section provides guidelines for using the Tier 1 checklist procedures that apply to nonstructural components.

Nonstructural components refer to architectural, mechanical, and electrical components. Additional guidance may be requested from another design professional with expertise in structural evaluation and design.

Investigation of nonstructural components can be very time-consuming because they usually are not well detailed on plans and because they often are concealed. It is essential, however, to investigate these items because their seismic support may have been given little attention in the past and they are potentially dangerous. Of particular importance in nonstructural component evaluation efforts are site visits to identify the present status of nonstructural items.

For nonstructural component evaluation in general, the key issue is generally whether the component or piece of equipment is braced or anchored. This issue is generally immediately visible and is part of the Tier 1 evaluation. If the component is braced or anchored, a Tier 3 evaluation per Chapter 13 may be necessary (based on the design professional's judgment) to establish the capacity of the components. Evaluation of cladding, exterior veneers, backup materials, and glazing requires more careful investigation because the critical components, such as connections and framing, often are concealed. In some cases, it is necessary to remove materials to conduct the evaluation. In addition, some calculations may be necessary to establish capacity to accommodate estimated seismic forces.

Several different types of deficiencies may be identified by the design professional in the Tier 1 evaluation. Some of these, such as the nonexistence of anchorage or bracing, are clearly in noncompliance, and any further evaluation is not necessary. In other cases, where some bracing or anchorage is provided or material is deteriorated or corroded, further evaluation and judgment are necessary to ascertain the extent of the deficiency and the consequences of the failure. Some simple calculations of weights, dimensional ratios, and forces are used in this tier of evaluation. A few critical components, such as heavy cladding, may justify a complete analysis (a Tier 3 evaluation) for ability to withstand forces and drifts and for achievement of the desired Performance Level.

Nonstructural elements can pose significant hazards to life safety under certain circumstances. In addition, certain types of building contents can pose hazards (e.g., toxic chemicals) and should be given attention during the evaluation. Special consideration also is warranted for nonstructural elements in essential facilities (e.g., hospitals and police and fire stations) and other facilities that must remain operational after an earthquake.

Any element with rigidity is a part of the seismic-force-resisting system until it fails. All walls have some rigidity, and they participate in resisting seismic forces in proportion to their relative rigidity. Walls of gypsum board or plaster have considerable rigidity. If connected at top and bottom, they can take a significant portion of the seismic force at low force levels; at some higher level, they crack and lose strength, and the main system then takes all of the seismic force.

A.7.1 Partitions

A.7.1.1 UNREINFORCED MASONRY: Unreinforced masonry or hollow-clay tile partitions are braced at a spacing equal to or less than 10 ft in low or moderate seismicity and 6 ft in high seismicity. Hollow-clay tile units are brittle and subject to shattering. Unreinforced masonry units may have cracks, loose blocks, or weak mortar. Bracing is needed to prevent portions of the unreinforced masonry from dislodging because of out-of-plane seismic forces, especially at corridors, elevator shafts, and stairs. Door openings often create localized weaknesses because of inadequate support for the block masonry or clay tile at the head and at the sides of the opening.

If bracing is nonexistent, mitigation with elements or connections needed to brace the partitions is necessary to achieve the selected Performance Level.

A.7.1.2 DRIFT: Rigid cementitious partitions are detailed to accommodate the following drift ratios: in steel moment frame, concrete moment frame, and wood frame buildings, 0.02; in other buildings, 0.005. Full-height partitions may fail because of lack of provision for building drift. Rigid cementitious partitions should be detailed to provide adequate space for the structure drift without racking the walls, while retaining out-of-plane support. In addition, if not separated from the structure at the top and sides, these walls may alter the response of the building.

A.7.1.3 STRUCTURAL SEPARATIONS: Partitions at structural separations have seismic or control joints. Seismic and control joints are necessary to permit differential structure movement at building separations without causing damage. However, if localized cracking of the partition does not lead to out-of-plane failure of the wall, the costs of a difficult retrofit process may not be justified.

A.7.1.4 TOPS: The tops of framed or panelized partitions that extend only to the ceiling line have lateral bracing to the building structure at a spacing equal to or less than 6 ft. Partitions extending only to suspended ceilings may fall out-of-plane because of lack of bracing. Movement of the partition may damage the ceiling. Cross walls that may frame into the wall have a beneficial impact on preventing excessive out-of-plane movement and should be considered in the evaluation process.

If lateral bracing is nonexistent, mitigation with elements or connections needed to brace the partitions is necessary to achieve the selected Performance Level.

A.7.2 Ceiling Systems

A.7.2.1 HEAVY OR LIGHT PARTITIONS SUPPORTED BY CEILINGS: The tops of masonry, hollow-clay tile, or gypsum board partitions are not laterally supported by an integrated ceiling system. Heavy partitions, such as those of gypsum board, masonry, or hollow-clay tile, can be falling hazards if not properly restrained at their tops and bottoms. Integrated ceilings braced with diagonal wires generally do not have the strength and stiffness to adequately brace the tops of heavy partitions. Heavy partitions should be independently braced to the underside of the floor above.

A.7.2.2 INTEGRATED CEILINGS: Integrated suspended ceilings with continuous areas greater than 144 ft^2, and ceilings of smaller areas that are not surrounded by restraining partitions, are laterally restrained at a spacing no greater than 12 ft with members attached to the structure above. Each restraint location has a minimum of four diagonal wires and compression struts, or diagonal members capable of resisting compression. Without bracing, integrated ceiling systems are susceptible to vertical and lateral movement, which can damage fire sprinkler piping and other elements that penetrate the ceiling grid. Lightweight suspended ceilings may not pose a Life Safety hazard unless special conditions apply in the judgment of the design professional, such as a large area of ceiling, poor-quality construction, vulnerable occupancy, or egress route.

If bracing is inadequate or nonexistent, mitigation with elements or connections needed to brace the ceilings is necessary to achieve the selected Performance Level.

A.7.2.3 SUSPENDED LATH AND PLASTER or GYPSUM BOARD: Suspended lath and plaster ceilings have attachments that resist seismic forces for every 12 ft^2 of area. Suspended plaster ceilings may behave like structural diaphragms and resist in-plane seismic forces. If the strength of the plaster is exceeded, cracking and spalling of portions of the ceiling are possible. Large areas of suspended plaster may separate from the suspension system and fall if not properly fastened. The interconnection of the plaster to the lath and of the lath to the support framing should also be specifically assessed.

If anchorage is nonexistent, mitigation with elements or connections needed to brace the ceilings is necessary to achieve the selected Performance Level.

A.7.2.4 EDGE CLEARANCE: The free edges of integrated suspended ceilings with continuous areas greater than 144 ft^2 have clearances from the enclosing wall or partition of at least the following: in moderate seismicity, 1/2 in.; in high seismicity, 3/4 in. This provision relates especially to large suspended grid ceilings but also may apply to other forms of hung ceilings. The intent is to ensure that the ceiling is sufficiently detached from the surrounding structural walls, such that it can tolerate out-of-plane drift without suffering distortion and damage.

A.7.2.5 CONTINUITY ACROSS STRUCTURE: The ceiling system does not extend continuously across any seismic joint and is not attached to multiple independent structures. Localized damage to ceilings is expected where seismic separations are not provided in the ceiling framing. Seismic or control joints should be provided based on a consideration of the consequences of local ceiling damage. If the damage is unlikely to create a falling hazard or prevent safe egress, the costs of a difficult retrofit process may not be justified.

A.7.2.6 EDGE SUPPORT: The free edges of integrated suspended ceilings with continuous areas greater than 144 ft^2 are supported by closure angles or channels not less than 2 in. wide. This provision relates especially to large suspended grid ceilings but also may apply to other forms of hung ceilings. The intent is to ensure that the ceiling is supported by the surrounding structural or nonstructural walls, such that it can tolerate lateral movement but not fall.

A.7.2.7 SEISMIC JOINTS: Acoustical tile or lay-in panel ceilings have seismic separation joints such that each continuous portion of the ceiling is no more than 2,500 ft^2 and has a ratio of long-to-short dimension no more than 4-to-1. This provision relates especially to large suspended grid ceilings. The intent is to ensure that the ceiling grid does not undergo excessive deformation because of its size or because of a very large aspect ratio such that it would collapse.

A.7.3 Light Fixtures

A.7.3.1 EMERGENCY LIGHTING: Emergency and egress lighting equipment is anchored or braced. Emergency and egress lighting equipment and signs should be provided with positive anchorage and/or bracing to prevent falling hazards and to enhance the reliability of post-earthquake performance.

If bracing or anchorage is nonexistent, mitigation is necessary to achieve the selected Performance Level.

A.7.3.2 INDEPENDENT SUPPORT: Light fixtures that weigh more per square foot than the ceiling they penetrate are supported independent of the grid ceiling suspension system by a minimum of two wires at diagonally opposite corners of each fixture. With lay-in fluorescent lighting systems, ceiling movement can cause fixtures to separate and fall from suspension systems. These fixtures perform satisfactorily when they are supported separately from the ceiling system or have backup support that is independent of the ceiling system. If the fixtures are independently supported by methods other than that described, the design professional should exercise judgment as to their adequacy.

If independent support is nonexistent, mitigation is necessary to achieve the selected Performance Level.

A.7.3.3 PENDANT SUPPORTS: Light fixtures on pendant supports are attached at a spacing equal to or less than 6 ft and, if rigidly supported, are free to move with the structure to which they are attached without damaging adjoining components. With stem-hung incandescent or fluorescent fixtures, the fixtures are usually suspended from stems or chains that allow them to sway. This swaying may cause the light and/or fixture to break after encountering other building components. The stem or chain connection may fail. Long rows of fluorescent fixtures placed end to end have sometimes fallen because of poor support, and their weight makes them hazardous. Long-stem fixtures, which may swing considerably, tend to suffer more damage than short-stem items.

If anchorage is inadequate or nonexistent, mitigation is necessary to achieve the selected Performance Level.

A.7.3.4 LENS COVERS: Lens covers on light fixtures are attached with safety devices. Devices or detailing to prevent lens covers from falling from the fixture are necessary to prevent damage to the lens and items below and may be a safety feature.

A.7.4 Cladding and Glazing

A.7.4.1 CLADDING ANCHORS: Cladding components weighing more than 10 lb/ft^2 are mechanically anchored to the structure at a spacing equal to or less than the following: for life safety in moderate seismicity, 6 ft; for Life Safety in high seismicity and for Position Retention in any seismicity, 4 ft. Exterior cladding components, which are often heavy, can fail if their connections to the building frames have insufficient strength and/or ductility. The design professional should assess the consequences of failure, in particular the location of the panels in relation to building occupants and passersby. Adhesive anchorage of heavy exterior cladding components is unacceptable; as such, anchorages typically fail at lower drift ratios than are necessary to ensure Life Safety performance.

If anchorage is nonexistent, mitigation is necessary to achieve the selected Performance Level.

A.7.4.2 CLADDING CONNECTION DETERIORATION: There is no evidence of deterioration, damage, or corrosion in any of the connection elements. Corrosion can reduce the strength of connections and lead to deterioration of the adjoining materials. The extent of corrosion and its impact on the wall cladding and structure should be considered in the evaluation.

Water leakage into and through exterior walls is a common building problem. Damage caused by corrosion, rotting, freezing, or erosion can be concealed in wall spaces. Substantial deterioration can lead to loss of cladding elements or panels.

Exterior walls should be checked for deterioration. Wall spaces should be probed if necessary, and signs of water leakage should be sought at vulnerable locations (e.g., at windows and at floor areas). Particular attention should be paid to elements that tie cladding to the backup structure and that tie the backup structure to the floor and roof slabs.

Extremes of temperature can cause substantial structural damage to exterior walls. The resulting weakness may be brought out in a seismic event. Exterior walls should be checked for cracking caused by thermal movements.

A.7.4.3 CLADDING ISOLATION: For steel or concrete moment frame buildings, panel connections are detailed to accommodate a story drift ratio of at least the following: for Life Safety in moderate seismicity, 0.01; for Life Safety in high seismicity and for Position Retention in any seismicity, 0.02. High levels of drift and deformation may occur in moment frames. If cladding connections are not detailed to accommodate the drift, failure of connections can result and panels can become dislodged.

A.7.4.4 MULTI-STORY PANELS: For multi-story panels attached at more than one floor level, panel connections are detailed to accommodate a story drift ratio of at least the following: for Life Safety in moderate seismicity, 0.01; for Life Safety in high seismicity and for Position Retention in any seismicity, 0.02. The design professional should determine whether the panels themselves and/or their connections to the structure would deform to accommodate the story drift. If the connectors are expected to deform, they should be capable of doing so without loss of structural support for the panel. If the

panels are expected to rack, they should be capable of deforming without becoming unstable and without loss of support for other interconnected systems, such as glazing.

A.7.4.5 PANEL CONNECTIONS: Cladding panels are anchored out-of-plane with a minimum number of connections for each wall panel, as follows: for Life Safety in moderate seismicity, 2 connections; for Life Safety in high seismicity and for Position Retention in any seismicity, 4 connections. A minimum of two connections, usually one at the top and bottom of the panel, are generally required for stability in resisting out-of-plane earthquake forces. Evaluation of connection adequacy should include consideration of all connection eccentricities.

If connections are nonexistent, mitigation is necessary to achieve the selected Performance Level.

A.7.4.6 BEARING CONNECTIONS: Where bearing connections are used, there is a minimum of two bearing connections for each cladding panel. A single bearing connection can result in a dangerous lack of redundancy. The adequacy of single-point bearing connections should be evaluated for resistance to in-plane overturning forces including all eccentricities. Small panels, such as some column covers, may have a single bearing connection and still provide adequate safety against failure.

If connections are nonexistent, mitigation is necessary to achieve the selected Performance Level.

A.7.4.7 INSERTS: Where concrete cladding components use inserts, the inserts have positive anchorage or are anchored to reinforcing steel. Out-of-plane panel connections that do not engage panel reinforcement are susceptible to pulling out when subjected to seismic forces.

A.7.4.8 GLAZING: Glazing panes of any size in curtain walls and individual interior or exterior panes more than 16 ft^2 in area are laminated annealed or laminated heat-strengthened glass and are detailed to remain in the frame when glass is cracked. Laminated glass remains in the frame after cracking or shattering, providing a temporary weather barrier and allowing for immediate occupancy after an earthquake.

A.7.5 Masonry Veneer

A.7.5.1 TIES: Masonry veneer is connected to the backup with corrosion-resistant ties. There is a minimum of one tie for every 2-2/3 ft^2, and the ties have spacing no greater than the following: for Life Safety in low or moderate seismicity, 36 in.; for Life Safety in high seismicity and for Position Retention in any seismicity, 24 in. Inadequately fastened masonry veneer can pose a falling hazard if it peels away from its backing. Judgment may be needed to assess the adequacy of various attachments that may be used. For levels of lower seismicity, it may be easier to show compliance for a larger tie spacing and larger tie area.

Ordinary shop-galvanized wire ties are not very corrosion resistant and are likely to become heavily corroded within 15 years, if the environment is marine or causes continued wetting and drying cycles to the ties, such as at a windward or southern exposure. To be corrosion resistant, the ties should be stainless steel.

If anchorage is nonexistent, mitigation is necessary to achieve the selected Performance Level.

A.7.5.2 SHELF ANGLES: Masonry veneer is supported by shelf angles or other elements at each above the ground floor. Inadequately fastened masonry veneer can pose a falling hazard if it peels away from its backing. Judgment may be needed to assess the adequacy of various attachments that may be used.

If anchorage is nonexistent, mitigation is necessary to achieve the selected Performance Level.

A.7.5.3 WEAKENED PLANES: Masonry veneer is anchored to the backup adjacent to weakened planes, such as at the locations of flashing. Inadequate attachment at locations of wall discontinuities is a potential source of weakness. Such discontinuities can be created by base flashing or architectural reveals. In areas of moderate and high seismicity, masonry veneer should be anchored to the backup system immediately above the weakened plane.

If anchorage is nonexistent, mitigation is necessary to achieve the selected Performance Level.

A.7.5.4 MASONRY VENEER DETERIORATION: There is no evidence of deterioration, damage, or corrosion in any of the connection elements. Corrosion can reduce the strength of connections and lead to deterioration of the adjoining materials. The extent of corrosion and its impact on the wall cladding and structure should be considered in the evaluation.

Water leakage into and through exterior walls is a common building problem. Damage caused by corrosion, rotting, zfreezing, or erosion can be concealed in wall spaces. Substantial deterioration can lead to loss of cladding elements or panels.

Exterior walls should be checked for deterioration. Wall spaces should be probed if necessary, and signs of water leakage should be sought at vulnerable locations (e.g., at windows and at floor areas). Particular attention should be paid to elements that tie cladding to the backup structure and that tie the backup structure to the floor and roof slabs.

Extremes of temperature can cause substantial structural damage to exterior walls. The resulting weakness may be brought out in a seismic event. Exterior walls should be checked for cracking caused by thermal movements.

A.7.5.5 MORTAR: The mortar in masonry veneer cannot be easily scraped away from the joints by hand with a metal tool, and there are not significant areas of eroded mortar. Inadequate mortar affects the veneer's ability to withstand seismic motions and maintain attachment to the backup system.

If mortar is noncompliant, mitigation is necessary to achieve the selected Performance Level.

A.7.5.6 WEEP HOLES: In veneer anchored to stud walls, the veneer has functioning weep holes and base flashing. Absence of weep holes and flashing indicates an inadequately detailed veneer. Water intrusion can lead to deterioration of the veneer and/or substrate. Destructive investigation may be needed to evaluate whether deterioration has taken place and mitigation is necessary.

If weep holes are noncompliant, mitigation is necessary to achieve the selected Performance Level.

A.7.5.7 STONE CRACKS: There are no visible cracks or signs of visible distortion in the stone. Cracking in the panel, depending on the material, may be caused by weathering or by stresses imposed by movement of the structure or connection system. Severely cracked panels probably require replacement.

Veins in the stone can create weak points and potential for future cracking and deterioration.

A.7.6 Metal Stud Backup Systems

A.7.6.1 STUD TRACKS: For veneer with metal stud backup, stud tracks are fastened to the structural framing at a spacing equal to or less than 24 in. On center. Without proper anchorage at top and bottom tracks, metal stud backup systems are susceptible to excessive movement during an earthquake.

A.7.6.2 OPENINGS: For veneer with metal stud backup, steel studs frame window and door openings. This issue is primarily one of the general framing system of the building. Absence of adequate framing around openings indicates a possible out-of-plane weakness in the framing system.

A.7.7 Concrete Block and Masonry Back-up Systems

A.7.7.1 ANCHORAGE: For veneer with concrete block or masonry backup, the backup is positively anchored to the structure at a horizontal spacing equal to or less than 4 ft along the floors and roof. Backup is the system that supports veneer for out-of-plane forces. Inadequate anchorage of the backup wall may affect the whole assembly's ability to withstand seismic motions and maintain attachment to backup.

A.7.7.2 UNREINFORCED MASONRY BACKUP: There is not an unreinforced masonry backup. Unreinforced masonry (URM) backup is common in early steel-framed buildings with cut stone exteriors. The design professional should use judgment in evaluating the condition and integrity of the backup and necessary remedial measures. Testing may be necessary to determine the strength of the URM backup.

Complete replacement of backup is extremely expensive; depending on the state of the installation and the facing materials, alternative methods may be possible.

To qualify as reinforced masonry, the reinforcing steel shall be greater than 0.002 times the gross area of the wall with a minimum of 0.0007 in either of the two directions; the spacing of reinforcing steel shall be less than 48 in.; and all vertical bars shall extend to the top of the backup walls.

Judgment by the design professional must be used to evaluate the adequacy of concrete block walls not classified as "reinforced." Concrete block walls lacking the minimum reinforcement may be susceptible to in-plane cracking under seismic forces, and portions of the wall may become dislodged.

A.7.8 Parapets, Cornices, Ornamentation, and Appendages

A.7.8.1 UNREINFORCED MASONRY PARAPETS OR CORNICES: Laterally unsupported unreinforced masonry parapets or cornices have height-to-thickness ratios no greater than the following: for Life Safety in low or moderate seismicity, 2.5; for Life Safety in areas of high seismicity and for Position Retention in any seismicity, 1.5. URM parapets present a major falling hazard and potential Life Safety threat. For sloped roofs, the highest anchorage level should not be taken at the ridge but should vary with roof slope when checking height-to-thickness ratios.

If anchorage is nonexistent, mitigation is necessary to achieve the selected Performance Level.

A.7.8.2 CANOPIES: Canopies at building exits are anchored to the structure at a spacing of 6 ft or less. An anchorage no greater than the following: for Life Safety in low or moderate seismicity, 10 ft; for Life Safety in high seismicity and for Position Retention in any area, 6 ft. Inadequately supported canopies present a Life Safety hazard. A common form of failure is pullout of shallow anchors from building walls.

If anchorage is nonexistent, mitigation is necessary to achieve the selected Performance Level.

A.7.8.3 CONCRETE PARAPETS: Concrete parapets with height-to-thickness ratios greater than 2.5 have vertical reinforcement. Inadequately reinforced parapets can be severely damaged during an earthquake.

If anchorage is nonexistent, mitigation is necessary to achieve the selected Performance Level.

A.7.8.4 APPENDAGES: Cornices, parapets, signs, and other ornamentation or appendages that extend above the highest point of anchorage to the structure or cantilever from components are reinforced and anchored to the structural system at a spacing equal to or less than 6 ft. This checklist item does not apply to parapets or cornices covered by other checklist items. The above components may vary greatly in size, location, and attachment; the design professional should use judgment in their assessment. If any of these items is of insufficient strength and/or is not securely attached to the structural elements, it may break off and fall onto storefronts, streets, sidewalks, or adjacent property and become a significant Life Safety hazard.

If anchorages are nonexistent, mitigation is necessary to achieve the selected Performance Level.

A.7.9 Masonry Chimneys

A.7.9.1 UNREINFORCED MASONRY CHIMNEYS: Unreinforced masonry chimneys extend above the roof no more than the following: for Life Safety in Low or Moderate Seismicity, 3 times the least dimension of the chimney; for Life Safety in High Seismicity and for Position Retention in any seismicity, 2 times the least dimension of the chimney. Unreinforced masonry chimneys are highly vulnerable to damage in earthquakes. Typically, chimneys extending above the roof more than twice the least dimension of the chimney crack just above the roof line and become dislodged. Chimneys may fall through the roof or onto a public or private walkway, creating a Life Safety hazard. Experience has shown that the costs of retrofitting masonry chimneys can sometimes exceed the costs of damage repair.

A.7.9.2 ANCHORAGE: Masonry chimneys are anchored at each floor level, at the topmost ceiling level, and the roof. Anchorage of chimneys has proven to be problematic at best, ineffective at worst in reducing chimney losses because anchorage alone does not typically account for incompatibility of deformations between the main structure and the chimney. Other retrofit strategies—such as the presence of plywood above the ceiling or on the roof to keep the falling masonry from penetrating or relocating occupant activities within a falling radius—may be more effective than anchoring chimneys.

A.7.10 Stairs

A.7.10.1 STAIR ENCLOSURES: Hollow-clay tile or unreinforced masonry walls around stair enclosures are restrained out-of-plane and have height-to-thickness ratios not greater than the following: for Life Safety in low or moderate seismicity, 15-to-1; for Life Safety in high seismicity and for Position Retention in any area, 12-to-1. Hollow-tile or unreinforced masonry walls may fail and block stairs and corridors. Post-earthquake evacuation efforts can be severely hampered as a result.

The procedures in Chapter 13 are recommended for analysis of the walls for both in-plane and out-of-plane forces. If bracing

is nonexistent, mitigation may be necessary to achieve the selected Performance Level.

A.7.10.2 STAIR DETAILS: In moment frame structures, the connection between the stairs and the structure does not rely on shallow anchors in concrete. Alternatively, the stair details are capable of accommodating the drift calculated using the quick check procedure of Section 4.5.3.1 without inducing tension in the anchors. If stairs are not specially detailed to accommodate story drift, they can modify structural response by acting as struts attracting seismic force. Shallow anchors, such as expansion and sleeve anchors, rigidly connect the stairs to the structure. The connection of the stair to the structure must be capable of resisting the imposed forces without loss of gravity support for the stair.

A.7.11 Building Contents and Furnishing

A.7.11.1 INDUSTRIAL STORAGE RACKS: Industrial storage racks or pallet racks more than 12 ft high meet the requirements of ANSI/RMI MH 16.1 as modified by ASCE 7 , Chapter 15. Storage racks are usually constructed of metal. Storage racks are generally purchased as proprietary systems installed by a tenant and are often not under the direct control of the building owner. Thus, they are usually not part of the construction contract and often have no foundation or foundation attachment. However, they are often permanently installed, and their size and loaded weight make them an important hazard to life, property, or the surrounding structure.

A.7.11.2 TALL NARROW CONTENTS: Contents more than 4 ft high with a height-to-depth or height-to-width ratio greater than 3-to-1 are anchored to the floor slab or adjacent structural walls. A height-to-depth or height-to-width ratio of up to 4-to-1 is permitted when only the basic nonstructural component checklist is required by Table 3-2. Tall, narrow storage or file cabinets or racks can tip over if they are not anchored to resist overturning forces. Commercial kitchen equipment, such as freezer boxes, refrigerators, ovens, and storage racks, can be overturned if not properly fastened to adjacent structural walls and floors.

A.7.11.3 FALL-PRONE CONTENTS: Equipment, stored items, or other contents weighing more than 20 lb whose center of mass is more than 4 ft above the adjacent floor level are braced or otherwise restrained. Contents heavier than 20 lb that are elevated more than 4 ft above the floor level can fall from where they are located and be a potential Life Safety concern in earthquakes with strong ground shaking. That is why these types of contents should be braced or restrained, such as being placed in a cabinet with doors that latch in buildings located in a region of high seismicity.

A.7.11.4 ACCESS FLOORS: Access floors more than 9 in. high are braced. Unbraced access floors can collapse onto the structural slab. Small areas of unbraced floors "captured" on all sides within full-height walls may be acceptable; however, the impact of ramps and/or other access openings should be considered in evaluating the adequacy of such unbraced access floors.

If bracing is nonexistent, mitigation is necessary to achieve the selected Performance Level.

A.7.11.5 EQUIPMENT ON ACCESS FLOORS: Equipment and computers supported on access floor systems are anchored or braced to the structure independent of the access floor. Tall, narrow computers and communications equipment can overturn if not properly anchored. Where overturning is not a concern because of the aspect ratio of the equipment, and it is desirable to provide some isolation between the equipment and the structure, it may be acceptable to support the equipment on a raised floor without positive restraint. In this case, the consequences of equipment movement should be considered. Tethering or some other form of restraint may be appropriate for limiting the range of movement.

If anchorage is nonexistent, mitigation is necessary to achieve the selected Performance Level.

A.7.11.6 SUSPENDED CONTENTS: Items suspended without lateral bracing are free to swing from or move with the structure from which they are suspended without damaging themselves or adjoining components. Suspended contents generally do not present a hazard unless they affect something else during seismic shaking.

A.7.12 Mechanical and Electrical Equipment

A.7.12.1 EMERGENCY POWER: Equipment used to power or control life safety systems is anchored or braced. Protection of the emergency power system is critical to post-earthquake recovery, and proper mounting of the components of the system is needed for reliable performance.

Non-emergency equipment located close to or above emergency equipment can be dislodged and fall onto, or cause piping to fail and flood out of, the emergency system.

If anchorage is nonexistent, mitigation is necessary to achieve the selected Performance Level.

A.7.12.2 HAZARDOUS MATERIAL EQUIPMENT: Equipment mounted on vibration isolators and containing hazardous material is equipped with restraints or snubbers. Heating, ventilation, and air conditioning (HVAC) or other equipment containing hazardous material on vibration isolation supports that are not restrained by snubbers may release their contents during an earthquake.

A.7.12.3 EQUIPMENT SUPPORT DETERIORATION: There is no evidence of deterioration, damage, or corrosion in any of the anchorage or supports of mechanical or electrical equipment. Damaged or corroded anchorage or supports of equipment may not have adequate capacity to resist seismic demands. Suspended or wall-mounted equipment is of more concern than floor- or roof-mounted equipment because failure of supports would create a falling hazard.

A.7.12.4 FALL-PRONE EQUIPMENT: Equipment weighing more than 20 lb whose center of mass is more than 4 ft above the adjacent floor level, and which is not in-line equipment, is braced. Equipment located more than 4 ft above the floor poses a falling hazard unless it is properly anchored and braced. Suspended equipment is more susceptible to damage than floor-, roof-, or wall-mounted equipment. Unbraced suspended equipment can sway during an earthquake, causing damage on impact with other adjacent items.

If bracing is nonexistent, mitigation is necessary to achieve the selected Performance Level.

A.7.12.5 IN-LINE EQUIPMENT: Equipment installed in-line with a duct or piping system, with an operating weight more than 75 lb, is supported and laterally braced independent of the duct or piping system. Pieces of equipment, such as large variable air volume (VAV) boxes, which are installed in line with distribution system components such as ducts or piping, can become falling hazards if they are not independently braced. It is common for these pieces of equipment to instead be supported by the piping or ducts with which they are in line and to which they are attached.

A.7.12.6 TALL NARROW EQUIPMENT: Equipment more than 6 ft high with a height-to-depth or height-to-width ratio greater than 3-to-1 is anchored to the floor slab or adjacent structural walls. Tall, narrow equipment can tip over if not anchored to resist overturning forces.

A.7.12.7 MECHANICAL DOORS: Mechanically operated doors are detailed to operate at a story drift ratio of 0.01. Doors that are stuck open or closed, such as fire house garage doors, can greatly affect essential services. Most large doors are not designed to accommodate earthquake-induced transient or permanent drifts in flexible buildings. Fire trucks and ambulances can be delayed in exiting. Critical minutes of emergency response time have been lost in past earthquakes when such doors have been rendered inoperable. Energy conservation measures and vandalism concerns have resulted in an evolution in modern door system designs. Most common door designs are drift intolerant and can result in egress difficulties in flexible buildings, requiring contingency planning and in many cases retrofits. Simple visual evaluations of drift incompatibility between doors that are critical to essential services, their frames, and supporting structures can quickly identify vulnerabilities.

A.7.12.8 SUSPENDED EQUIPMENT: Equipment suspended without lateral bracing is free to swing from or move with the structure from which it is suspended without damaging itself or adjoining components. Suspended equipment generally does not present a hazard unless it impacts something else during seismic shaking.

A.7.12.9 VIBRATION ISOLATORS: Equipment mounted on vibration isolators is equipped with horizontal restraints or snubbers and with vertical restraints to resist overturning. Many isolation devices for vibration isolated equipment (e.g., fans or pumps) offer no restraint against lateral movement. As a result, earthquake forces can cause the equipment to fall off its isolators, usually damaging interconnected piping. Snubbers or other restraining devices are needed to prevent horizontal movement in all directions.

Seismic restraints or snubbers must have proper anchors to prevent pullout. The contact surfaces on the snubbers should be resilient to prevent impact amplification.

If restraints and snubbers are nonexistent, mitigation is necessary to achieve the selected Performance Level.

A.7.12.10 HEAVY EQUIPMENT: Equipment weighing more than 400 lb is anchored to the structure. For rigidly mounted large equipment (e.g., boilers, chillers, tanks, or generators), inadequate anchorage can lead to horizontal movement. Unanchored equipment, particularly equipment with high aspect ratios such as all tanks, may overturn and/or move and damage utility connections. Performance generally is good when positive attachment to the structure is provided.

If bracing is nonexistent, mitigation is necessary to achieve the selected Performance Level.

A.7.12.11 ELECTRICAL EQUIPMENT: Electrical equipment is laterally braced to the structure. Without proper connection to the structure, electrical equipment can move horizontally and/or overturn. The movement can damage the equipment and may create a hazardous condition. Equipment may be mounted to the primary structural system or on walls or ceilings that are capable of resisting the applied forces. Distribution lines that cross structural separations should be investigated. If relative movement of two adjacent buildings can be accommodated by "slack" in the distribution lines, the condition may be acceptable.

If attachment is nonexistent, mitigation is necessary to achieve the selected Performance Level.

A.7.12.12 CONDUIT COUPLINGS: Conduit greater than 2.5 in. Trade size that is attached to panels, cabinets, or other equipment and is subject to relative seismic displacement has flexible couplings or connections. Conduit rigidly attached to electrical equipment can be damaged at the junction where it attaches to the equipment because of differential movement of the conduit and the equipment. Providing a flexible coupling or connection capable of accommodating the relative displacement mitigates this issue.

A.7.13 Piping

A.7.13.1 FIRE SUPPRESSION PIPING: Fire suppression piping is anchored and braced in accordance with NFPA 13. Fire sprinkler piping has performed poorly in past earthquakes, rendering systems unusable when most needed. Causes of fire sprinkler piping failure included inadequate lateral bracing of sprinkler mains and cross-mains, inadequate flexibility and clearance around sprinkler piping, and impact between sprinkler pipes and other unbraced nonstructural elements. Proper pipe bracing is needed for reliable performance of the system. NFPA 13 is intended to provide Operational Nonstructural Performance.

If anchorage and bracing are nonexistent, mitigation is necessary to achieve the selected Performance Level.

A.7.13.2 FLEXIBLE COUPLINGS: Fluid, gas, and fire suppression piping have flexible couplings. For fire suppression piping, the couplings are in accordance with NFPA 13. Failures may occur in pipes that cross seismic joints because of differential movement of the two adjacent structures. Special detailing is required to accommodate the movement. Flexibility can be provided by a variety of means, including special couplings and pipe bends. Flexible couplings should be evaluated for their ability to accommodate expected seismic movements in all directions. NFPA 13 is intended to provide Operational Nonstructural Performance.

If flexible couplings are nonexistent, mitigation is necessary to achieve the selected Performance Level.

A.7.13.3 SPRINKLER CEILING CLEARANCE: Penetrations through panelized ceilings for fire suppression devices provide clearances in accordance with NFPA 13. A common failure of fire suppression piping is caused by the sprinkler heads impacting the ceiling where the sprinkler pokes down through. This problem can be mitigated by providing clearance around the sprinkler head or by providing flexible lines between the horizontal pipe and the sprinkler head.

A.7.13.4 FLUID AND GAS PIPING: Fluid and gas piping is anchored and braced to the structure to prevent limit spills or leaks. Piping can fail at elbows, tees, and connections to supported equipment. The potential for failure is dependent on the rigidity, ductility, and expansion or movement capability of the piping system. Joints may separate and hangers may fail. Hanger failures can cause progressive failure of other hangers or supports. Smaller diameter pipes, which generally have greater flexibility, often perform better than larger diameter pipes, but they are still subject to damage at the joints. Piping in vertical runs typically performs better than in horizontal runs if it is regularly connected to a vertical shaft.

When using flexible couplings, the following limitations should be considered:

- Elastomeric flexible couplings can resist compression, tension, torsion, and bending.

- Metal flexible couplings can resist bending only.
- Ball joints can resist bending and torsion.
- Grooved couplings can resist only minimum bending and torsion.

Some building codes permit certain configurations and size of piping without bracing or anchorage. It may be possible to demonstrate compliance by showing that the piping meets current code requirements.

If anchorage and bracing are nonexistent, mitigation is necessary to achieve the selected Performance Level.

A.7.13.5 C-CLAMPS: One-sided C-clamps that support piping greater than 2.5 in. In diameter are restrained. Unrestrained C-clamps (such as those connected to the bottom flange of structural steel beams) have proven to be unreliable during an earthquake. Pipe movement can cause the C-clamp to work itself off its support, causing local loss of gravity support for the pipe. The loss of a single C-clamp can lead to progressive collapse of other supports.

If C-clamps are noncompliant, mitigation is necessary to achieve the selected Performance Level.

A.7.13.6 PIPING CROSSING SEISMIC JOINTS: Piping that crosses seismic joints or isolation planes or is connected to independent structures has couplings or other details to accommodate the relative seismic displacements. Because of the potential for portions of a building on either side of a seismic joint or isolation plane to move relative to each other, any piping that crosses the joint should have been detailed to accommodate whatever movement is anticipated across the joint. The same condition exists when the piping is supported by different structures that are independent of each other. If the piping does not have flexible couplings or other means to accommodate the movement, the pipe can be damaged such that it releases its contents.

A.7.14 Ducts

A.7.14.1 STAIR AND SMOKE DUCTS: Stair pressurization and smoke control ducts are braced and have flexible connections at seismic joints. Because these ducts are part of the fire protection system, they are more critical than normal air conditioning ducts. Depending on the duct layout and function of the building, however, the hazard may vary greatly and judgment should be exercised during the evaluation.

If bracing or flexible connections are nonexistent, mitigation is necessary to achieve the selected Performance Level.

A.7.14.2 DUCT BRACING: Rectangular ductwork larger than 6 ft^2 in cross-sectional area and round ducts larger than 28 in. In diameter, are braced. The maximum spacing of transverse bracing does not exceed 30 ft. The maximum spacing of longitudinal bracing does not exceed 60 ft. Large duct installations are heavy and can cause damage to other materials and may pose a hazard to occupants. Failures may occur in long runs because of large amplitude swaying. Failure usually consists of leakage rather than collapse.

When evaluating the ductwork, the function of the duct system, proximity to occupants, and other materials likely to be damaged should be considered.

If bracing is nonexistent, mitigation is necessary to achieve the selected Performance Level.

A.7.14.3 DUCT SUPPORT: Ducts are not supported by piping or electrical conduit. Though generally undesirable, this condition is only serious when large ducts are supported by other elements that are poorly supported and braced.

A.7.14.4 DUCTS CROSSING SEISMIC JOINTS: Ducts that cross seismic joints or isolation planes or are connected to independent structures have couplings or other details to accommodate the relative seismic displacements. Because of the potential for portions of a building on either side of a seismic joint or isolation plane to move relative to each other, any ducts that cross the joint should have been detailed to accommodate whatever movement is anticipated across the joint. The same condition exists when the ducts are supported by different structures that are independent of each other. If the ducts do not have flexible couplings or other means to accommodate the movement, the ducts can be damaged to the point where they do not function.

A.7.15 Hazardous Materials

A.7.15.1 HAZARDOUS MATERIAL STORAGE: Breakable containers that hold hazardous material, including gas cylinders, are restrained by latched doors, shelf lips, wires, or other methods. Unrestrained containers are susceptible to overturning and falling, resulting in release of materials. Storage conditions should be evaluated in relation to the proximity to occupants, the nature of the substances involved, and the possibility of a toxic condition.

If restraints are nonexistent, mitigation is necessary to achieve the selected Performance Level.

A.7.15.2 SHUT-OFF VALVES: Piping containing hazardous materials has shut-off valves or other devices to prevent major spills or leaks. Postearthquake recovery efforts are hampered if toxic releases cannot be promptly stopped. Shut-off valves should be accessible, and training should be provided to enhance the reliability of postearthquake recovery efforts. The specifics of the materials and systems vary greatly. Federal, state, and local codes govern regarding the installation of shut-off devices.

Large spills of some nonhazardous materials, such as liquid soap or some food products, also can be environmentally damaging and can create a nuisance. Proper shut-off valves and containment structures can help to avert these problems.

If shut-off devices are nonexistent, mitigation is necessary to achieve the selected Performance Level. The need for and location of shut-off devices should be established in cooperation with local utility companies. Utility companies vary in their policies regarding the installation of shut-off devices.

A.7.13.3 SHUT-OFF VALVES: Piping containing hazardous material, including natural gas, has shut-off valves or other devices to limit spills or leaks. Post-earthquake recovery efforts have been severely hampered in cases where damaged utility lines could not be expediently isolated from main distribution systems. Shut-off valves are needed to allow for isolation of a building or portions of a building. The valves should be easily accessible, and training should be provided for reliable post-earthquake response.

Shut-off valves can be either manually operated or automatic. Automatic shut-off valves should conform to ASCE 25-97. Manually operated valves should conform to ASME B16.33 or ANSI Z21.15.

If shut-off devices are nonexistent, mitigation is necessary to achieve the selected Performance Level. The need for and location of shut-off devices should be established in cooperation with local utility companies. Utility companies vary in their policies regarding the installation of shut-off devices.

A.7.15.4 FLEXIBLE COUPLINGS: Hazardous material ductwork and piping, including natural gas piping, has

flexible couplings. Failures may occur in pipes that cross seismic joints because of differential movement of the two adjacent structures. Special detailing is required to accommodate the movement. Flexibility can be provided by a variety of means, including special couplings and pipe bends. Flexible couplings should be evaluated for their ability to accommodate expected seismic movements in all directions.

If flexible couplings are nonexistent, mitigation is necessary to achieve the selected Performance Level.

A.7.16 Elevators

Elevator components are typically not dealt with by design professionals. If necessary, a design professional with experience in elevator design should be consulted.

A.7.16.1 RETAINER GUARDS: Sheaves and drums have cable retainer guards. Strong earthquake motions cause the elevator hoistway cables to whip around and often misalign on the sheaves and drums. Retainer guards are effective at reducing the number of misalignments and improving the possibility that the elevator can continue in service after inspection.

A.7.16.2 RETAINER PLATE: A retainer plate is present at the top and bottom of both car and counterweight. Retainer plates are installed just above or below all roller guides and serve to prevent derailment. They are U-shaped, firmly attached to the roller guides, and run not more than 3/4 in. from the rail.

A.7.16.3 ELEVATOR EQUIPMENT: Equipment, piping, and other components that are part of the elevator system are anchored. The successful performance of an elevator system requires that the various elements of the system remain in place, undamaged, and capable of operating after inspection. As a minimum, all equipment, including hoistway doors, brackets, controllers, and motors, must be anchored.

A.7.16.4 SEISMIC SWITCH: Elevators capable of operating at speeds of 150 ft/min or faster are equipped with seismic switches that meet the requirements of ASME A17.1 or have trigger levels set to 20% of the acceleration of gravity at the base of the structure and 50% of the acceleration of gravity in other locations. Traction elevators, unless carefully designed and constructed, are highly vulnerable to damage during strong shaking. It is very common for the counterweights to swing out of their rails and collide with the car. Current industry practice and most elevator regulations ensure that the elevator occupants remain safe by installing seismic switches that sense when strong shaking has begun and automatically shut down the system. Seismic switches are generally located in the elevator machine room and are connected directly to the controller. The design professional should verify that the switch is operational, as they are often disabled because of malfunctioning.

A.7.16.5 SHAFT WALLS: Elevator shaft walls are anchored and reinforced to prevent toppling into the shaft during strong shaking. Elevator shaft walls are often unreinforced masonry construction using hollow-clay tile or concrete masonry block. In the event of strong shaking, these walls may experience significant damage caused by in-plane and out-of-plane forces and may fall into the shaft.

A.7.16.6 COUNTERWEIGHT RAILS: All counterweight rails and divider beams are sized in accordance with ASME A17.1. The typically poor performance of counterweights is caused by the size of the rails and the spacing of the rail brackets. Eight-pound rails have routinely shown to be insufficient and are best replaced by 15-pound rails as a minimum.

A.7.16.7 BRACKETS: The brackets that tie the car rails and the counterweight rail to the building structure are sized in accordance with ASME A17.1. The brackets that support the rails must be properly spaced and designed to be effective. It is common for brackets to be properly spaced but improperly designed. The design professional should be particularly aware of the eccentricities that often occur within the standard bracket systems most commonly used.

A.7.16.8 SPREADER BRACKET: Spreader brackets are not used to resist seismic forces. Spreader brackets are a useful element to maintain alignment of counterweight rails between supporting brackets. They have worked successfully under normal daily operating loads. However, they do not offer any protection to the rails under seismic loading because of the large eccentricities inherent in their shape.

A.7.16.9 GO-SLOW ELEVATORS: The building has a go-slow elevator system. The functionality of a building after an earthquake depends on the ability to move through it. However, elevators that are compliant with the code shut down after an earthquake. Therefore, even if the building has the ability to provide Immediate Occupancy after an earthquake, movement through the building is impeded until the elevators are reactivated. Go-slow elevators alleviate this problem by providing one elevator that functions at a lower speed after an earthquake.

APPENDIX B
APPLYING ASCE 41-13 IN BUILDING CODES, REGULATORY POLICIES, AND MITIGATION PROGRAMS

B.1 INTRODUCTION

This appendix discusses two issues related to the ASCE 41-13 standard but outside the scope of its technical provisions. First is the selection of a Performance Objective.[1] Second is the recognition of different contexts in which the standard is expected to be applied. ASCE 41-13 will often be applied through mitigation programs that target specific building types or occupancies. In most of the country, however, mitigation is most commonly done either voluntarily or when triggered by the local building code. The various mitigation contexts sometimes call for different considerations when selecting a Performance Objective and applying the standard.

As described in Chapter 2, ASCE 41-13 accommodates a number of possible Performance Objectives. The Performance Objective, together with attributes of the site and the building, determines the applicable provisions for evaluation or retrofit. Thus, one of the first tasks for the decision maker applying the standard is to select a Performance Objective.

This standard does not specify a Performance Objective. The purpose of this appendix, however, is to describe how objectives are commonly set, with reference to existing programs and precedents.[2] The intent is to provide some general guidance to code developers, policy makers, building owners, and other stakeholders.

A mitigation program can involve a single building, a portfolio or class of buildings, or an entire community of buildings and infrastructure. Seismic evaluation and retrofit, the subjects of this standard, are key components of many programs, but a full program might also include tasks for, e.g., financing, capital planning, legislation, and enforcement. These other tasks, though often essential to the success of a mitigation program, are outside the scope of this standard and this appendix.

Mitigation programs and regulations can vary in purpose, scope, duration, and in other ways. This appendix classifies them primarily by whether the mitigation is

- Mandatory, generally through a specific law or ordinance;
- Voluntary, at the discretion of one or more building stakeholders; or
- Triggered under certain conditions by a building code or by a regulation or policy of the authority having jurisdiction.

The process and rationale for selecting a Performance Objective and applying the standard vary with the type of mitigation. Additional considerations—generally waivers or relaxed criteria—often apply to designated historic buildings, as noted briefly in the following sections. Commentary Section C1.1 discusses the application of the standard to historic buildings in more general terms.

B.2 MANDATORY MITIGATION

Mandatory mitigation is mitigation required by specific legislation regardless of the intentions of the building owner (or other stakeholders). Where mitigation is mandated, the ASCE 41-13 standard (or other engineering criteria) can be invoked by the legislation directly or by subsequent regulations.

Mandatory mitigation has been used most often to target specific groups of buildings that pose extreme or urgent risks, especially where voluntary or triggered mitigation has been slow or ineffective from the perspective of public policy makers.

- In some cases, the urgency is related to safety and the likelihood of life-threatening structural collapse; the classic example is the case of unreinforced masonry buildings in California. Other similarly hazardous conditions could, in some jurisdictions, pose risks that might warrant mandatory mitigation. These conditions might include certain concrete tilt-up structures, nonductile concrete structures, or even certain nonstructural components such as gas-fired equipment or brick chimneys.
- In other cases, the urgency is related to essential postearthquake services, regardless of structure type, such as those provided by hospitals.
- Legislation has also been proposed to target buildings that are neither historic collapse risks nor essential facilities, but which, as a group, are expected to be critical to a community's postearthquake recovery. Programs addressing soft-story, multi-unit residential buildings are examples.

B.2.1 Performance Objectives Because mandatory mitigation is driven by legislation, the stated purpose of the law or ordinance will usually suggest a suitable Performance Objective. Mandatory mitigation represents legislated public policy. As such, even though mitigation is performed through individual projects, building by building, the program's overall success is measured at the jurisdiction level. The appropriate Performance Objective is thus the one that, when applied to all subject buildings, results in the desired improvement for the jurisdiction as a whole. This perspective distinguishes mandatory mitigation from voluntary or

[1]This appendix refers to Performance Levels, Seismic Hazard Levels, and Performance Objectives defined in Chapter 2 of the standard.

[2]This appendix references specific codes, jurisdictions, programs, and practices for illustration purposes only. No endorsement or critique is implied.

triggered mitigation, which both deal primarily with individual buildings.

Where public safety is the primary concern, the standard's Life Safety Performance Level is often appropriate. The Life Safety structural and nonstructural provisions were developed to support programs focused on the safety of persons, as opposed to programs seeking to minimize repair cost or downtime. Additional considerations when selecting a safety-based Performance Objective include the following:

- Life Safety performance is traditionally paired with a hazard somewhat less than that required for new construction, such as the BSE-1E hazard. As discussed in commentary Section C2.2.1, use of this lower hazard recognizes that achieving "code equivalent" performance with an obsolete structure type is often disproportionately expensive and disruptive; for mandated mitigation, this issue can affect the political viability of a proposed program. Nevertheless, if equivalence with new buildings is sought, a Performance Objective of Life Safety Structural Performance Level and Position Retention Nonstructural Performance Level in the BSE-1N earthquake might be more suitable (see Section 2.2.4.)
- The standard's Basic Performance Objectives (see Sections 2.2.1 and 2.2.4) each have two parts, one of which considers performance at the BSE-2E or BSE-2N hazard level. Though use of the higher hazard level can distinguish robust performance from marginal performance at the lower BSE-1E or BSE-1N hazard level, it can also substantially increase the level of evaluation or design effort. Most mandatory mitigation programs have not used a two-part objective. This approach is consistent in principle with the standard, in which acceptable Tier 1 evaluation considering the BSE-1E hazard is deemed to comply with a corresponding performance under the BSE-2E hazard (Section 2.2.1). However, these mitigation programs may not have the same limitations as the Tier 1 procedure does; therefore, they may not provide the intended performance in the BSE-2E hazard without explicit consideration at that hazard level.
- Where the goal of the mandate is to remove the most egregious life-threatening conditions with the least expense and disruption, Collapse Prevention structural performance in the BSE-1E or BSE-1N earthquake might be appropriate. Note, however, that ASCE 41-13 does not provide Tier 1 evaluation criteria for Collapse Prevention performance. The standard's committee expects to develop such criteria in a future revision cycle. In the interim, Tier 1 Collapse Prevention evaluation criteria can be derived from the Life Safety criteria by extracting the checklist items and other relevant provisions that focus on the most egregious potential deficiencies.)
- Where the legislation targets a specific structure type, nonstructural performance might be reasonably ignored. The standard's separate enumeration of structural and nonstructural performance levels supports such an approach. Similarly, where the targeted deficiency involves a specific nonstructural deficiency (such as an unbraced brick parapet or gas-fired equipment), an objective that ignores structural performance might be reasonable.

Where postearthquake functionality is the primary concern, the standard's Immediate Occupancy Structural Performance Level and Operational Nonstructural Performance Level might be appropriate. These Performance Levels were developed to support programs focused on maintaining building services in the immediate postearthquake period. Additional considerations are the following:

- As with safety-based mandates, functionality-based mandates often pair Immediate Occupancy performance with a reduced Seismic Hazard Level like BSE-1E (see Section 2.2.1). For the most essential facilities, however, the deference to practicality represented by the use of a reduced hazard might not be warranted. A Performance Objective involving the BSE-1N and/or the BSE-2N hazard might be more appropriate for mandating legislation that seeks equivalence with new buildings (see Section 2.2.4).
- As described in Section C2.3.2.1, the standard does not provide a full set of evaluation or retrofit criteria for Operational Nonstructural Performance, which relies in part on the performance of infrastructure and utilities external to the building. In some cases, or for some components or systems, the standard's Position Retention nonstructural criteria might be adequate. In Section 2.2.1, for example, the standard's Basic Performance Objective for Existing Buildings calls for Position Retention nonstructural performance in the BSE-1E earthquake even for buildings assigned to Risk Category IV. In general, however, nonstructural performance is important for functionality-based objectives and should not be ignored.

Where the mandating legislation has other goals, appropriate Performance Objectives can be customized from the standard's defined performance and hazard levels.

B.2.2 Implementation Issues Because mandatory mitigation is based in legislation, the legislative language (or subsequent regulations) must account for the logistics of a whole program. Program development issues related to the use of ASCE 41-13 might include the following:

- Phasing. The standard's tiered methodology enables the phased approach often used in mandatory mitigation programs. Tier 1 evaluation provisions facilitate a screening process, which can be followed by detailed evaluation or retrofit. The standard also allows separate Performance Objectives for evaluation and retrofit.
- Quality assurance. Legislated mandates by their nature involve enforcement, reviews, and approvals by jurisdiction staff. This method can require the development of procedures, as well as the training of staff.
- Incomplete criteria. As noted above, ASCE 41-13 does not provide Tier 1 evaluation criteria for Collapse Prevention performance. Where the mandating legislation seeks a collapse-based evaluation, a customization of the Tier 1 Life Safety criteria might be appropriate.

B.2.3 Historic Buildings Whereas designated historic buildings are often afforded waivers or special consideration by building codes, some of those variances might not be appropriate in the case of mandatory mitigation. Where a public safety risk or the need for an essential facility is urgent enough to justify a legislated mandate, that urgency might be prioritized over the objectives of historic preservation. Nevertheless, where ASCE 41-13 is applied to historic buildings, legislation (or its implementing regulations) might allow for certain exceptions to the normal mandated compliance.

B.2.4 Example Programs The following example programs represent the diversity of seismic mitigation mandates. They cover both private and public buildings, local and statewide scope, evaluation-only programs as well as mandated retrofit, and a variety of regulatory approaches.

- California unreinforced masonry buildings. In 1986, California required (through Senate Bill 547) local jurisdictions in high seismicity areas to compile inventories and adopt mitigation programs for privately owned unreinforced masonry buildings. In most of the major jurisdictions, including Los Angeles and San Francisco, the resulting programs involved mandatory retrofit. The evaluation and retrofit criteria varied, but many used criteria similar to the special procedure now found in Section 15.2 of this standard. These programs were administered by the local building departments of individual jurisdictions.
- California hospitals. In 1994, California required (through Senate Bill 1953) certain hospital facilities to be replaced or retrofitted or to have acute care services relocated to other buildings. As of 2012, evaluation criteria were added to Chapter 6 of the *California Building Standards Administrative Code* reprint portions of the ASCE 31-03 Tier 1 checklists. Chapter 34A of the *California Building Code* references ASCE 41-06 and ties compliance to certain Performance Objectives, with an emphasis on post-earthquake functionality. This program is administered by the state's Office of Statewide Health Planning and Development, a state agency dedicated to specific health-care-related occupancies.
- California courthouses. In 2002, California required (through Senate Bill 1732) seismic evaluations of most of its courthouse facilities as part of an intended transfer of facility management responsibility from counties to the state. The evaluation criteria used a customized version of the ASCE 31-03 Life Safety criteria. This program was administered by the state's Administrative Office of the Courts, the agency that would become the owner or manager of the transferred buildings.
- Oregon schools and emergency facilities. In 2005, Oregon required (through Senate Bill 2) a seismic safety inventory of more than 3,000 public schools, hospitals, and first responder facilities. Although the assessments used a rapid visual screening technique, and not ASCE 31 or ASCE 41, they represent a significant mandatory program. The program was administered by the Oregon Department of Geology and Mineral Industries, a technical department not normally acting as an owner or regulatory agency.

B.3 VOLUNTARY MITIGATION

Voluntary mitigation is mitigation undertaken at the discretion of a building owner or other stakeholder. It is sometimes driven by an owner's intent to anticipate a future mandate or triggered work. Mandatory or triggered evaluation sometimes leads to voluntary retrofit. There are a few subcategories of voluntary mitigation, and they affect how ASCE 41-13 (or other engineering criteria) is invoked and applied:

- Some voluntary mitigation is entirely owner driven. Often, voluntary mitigation is done as a single project, as in the case of a homeowner retrofitting a house. In other cases, the mitigation is done to comply with an institutional policy covering multiple properties through a coordinated program, for example, by a university, corporation, or government agency. Though a driving policy implies a requirement of sorts, the mitigation is still said to be voluntary with respect to the local building department or authority having jurisdiction. That is, if the mitigation is *not* done, no law or ordinance has been violated. (Policies for voluntary mitigation can make use of triggers, as discussed in Section B.4. The federal government, for example, triggers voluntary mitigation when a new space is purchased or leased.)
- Some voluntary mitigation is driven by industry standards or by contractual relationships between parties. For example, an owner might perform mitigation to secure a loan, to satisfy requirements of a potential tenant, or to qualify for an insurance discount. In these cases, acceptability is subject to the approval of a party other than the owner, but the mitigation is still voluntary with respect to the authority having jurisdiction.
- Some jurisdictions offer incentives to encourage mitigation. The mitigation is voluntary in that no owner is required to pursue the incentive, but if an owner intends to qualify, the logistics of the mitigation become similar to those of mandatory work, involving specific criteria, approvals, and quality assurance by the authority administering the incentive program.

B.3.1 Performance Objectives The variety of defined performance and hazard levels in ASCE 41-13 makes it well suited to voluntary mitigation. By its nature, voluntary mitigation is about choice, so almost any pairing of performance and hazard can make sense as a Performance Objective. The appropriateness of the selected objective is measured only by the desires or preferences of the parties. Table C2-8, however, recommends against some combinations of structural and nonstructural performance levels; it does not make sense, for example, to seek exceptional nonstructural performance (to minimize downtime, perhaps) while allowing extensive structural damage (which would shut down the building anyway).

Where safety is an urgent concern, mitigation is often the subject of legislative mandates, as discussed above. Some jurisdictions, however, might determine that the safety risk does not justify a jurisdiction-wide mandate. In these cases, the standard's safety-based objectives (as discussed in Section B.2) might be appropriate for voluntary mitigation. Otherwise, objectives that focus on reducing property losses or downtime might be appropriate.

Voluntary mitigation is further distinguished from mandatory or triggered mitigation because its optional nature requires no strict compliance with any prescribed criteria. That is, assuming that all stakeholders agree, the owner is free to emphasize certain provisions and ignore or under-comply with others. This approach can make sense where strict compliance with certain provisions would be especially difficult or impractical. Voluntary mitigation is often scoped based on an available budget or by a desire to avoid disruption to tenants or building services. It can thus make sense, for example, to retrofit an exceptionally soft or weak first story using Life Safety structural criteria, while allowing marginal Life Safety deficiencies in occupied upper stories. On the nonstructural side, a voluntary project might seek Position Retention performance as a general rule but ignore components that are inaccessible or easier to repair than to retrofit.

The selective nature of voluntary mitigation is both common and explicitly allowed by building codes. (See, for example, Section 3404.5 of the 2012 *International Building Code* or Section 807.6 of the 2012 *International Existing Building Code*.) However, it is not allowed, and does not make sense, where voluntary work would create a structural irregularity or an unbalanced condition that would reduce performance of the building as a whole.

Where the mitigation is done to qualify for an incentive provided by a jurisdiction, the Performance Objective represents a public policy, much as it does in the case of a legislated mandate. The objective and the engineering criteria for achieving it are

spelled out in the ordinance or regulation that offers the incentive. As with mandatory mitigation, the Performance Objective should match the driving policy issue, which could be rooted in safety, recovery planning, community stability, or other concerns. Guidance for selecting an objective using ASCE 41-13 is therefore similar to that given in Section B.2.

B.3.2 Implementation Issues Voluntary mitigation often lacks the criteria-setting and procedural documentation (the ordinances and codes) of mandatory or triggered mitigation. This fact, together with the generally flexible nature of voluntary work, raises some implementation issues related to the use of ASCE 41-13:

- Incomplete criteria. As noted above, ASCE 41-13 does not provide Tier 1 evaluation criteria for Collapse Prevention Performance Level. Where the parties seek a collapse-based evaluation, a customization of the Tier 1 Life Safety criteria might be appropriate.
- Quality assurance. Where there is no requirement to do the mitigation, there is no basis for a building department or authority to check the work. For voluntary evaluation, the authority probably does not even see the report. For voluntary retrofit, building permits are generally needed, but reviews of seismic design calculations and drawings are often limited to a check that no harm is being caused. The burden of quality assurance thus falls to those who set the Performance Objective. (This concern applies less in the case of a jurisdictional incentive program, where the agency offering the incentive is motivated to confirm the quality of the voluntary work.)
- Certification. One benefit of using a document like ASCE 41-13 is that work can be said to meet (or not meet) a defined standard. As discussed above, however, voluntary mitigation, even if it references the standard, often makes exceptions for itself for practical reasons. Though rational, this situation can make it difficult for an owner or engineer to certify full compliance or to state with clarity exactly what performance has been sought.
- Records and disclosures. Different jurisdictions have different requirements regarding public records and disclosures of building information. This issue can affect how parties choose to apply ASCE 41-13 (or other engineering criteria) and report findings, especially where the work involves only voluntary evaluation.

B.3.3 Historic Buildings Special considerations often made for designated historic buildings are within the spirit of voluntary mitigation, which already allows for practical variances and exceptions even to standard criteria such as those in ASCE 41-13.

B.3.4 Example Programs Thousands of voluntary retrofits are completed every year throughout the country. Most are owner-initiated improvements of individual buildings, and they range in scope from simple nonstructural mitigation (for example, bracing bookshelves or water tanks) to full structural retrofits. The following examples represent the types of voluntary programs described above.

- Federal government facilities. Federal agencies follow internal policies based on the recommended practice known as *RP 8*, "Standards of Seismic Safety for Existing Federally Owned and Leased Buildings" (NIST 2012). *RP 8* relies on ASCE 31-03 and ASCE 41-06 for its technical criteria. For most buildings, it sets Performance Objectives based on safety. Some agencies use *RP 8* as a supplement to the applicable building code (see Section B.4.4); others cite it as a guideline and apply it voluntarily. For example, some agencies apply *RP 8* when leasing or buying private buildings otherwise regulated by the local building department. Because most local codes do not require seismic evaluation upon lease or purchase, the agency's application of *RP 8* in these cases is entirely voluntary from the perspective of the local code official. Many state and municipal agencies have similar policies.
- Private sector due diligence. Private sector lenders and equity investors often require seismic loss estimates as a precondition for financing, especially for commercial buildings. Loss estimates may be performed using ASTM E2026 (2007) and ASTM E2557 (2007) standards, both of which include optional criteria that reference ASCE 31-03 and ASCE 41-06.
- Portland, Oregon, schools. In 2009, Portland Public Schools engaged a consultant to conduct evaluations and prepare preliminary retrofit designs and project cost estimates for 12 campuses. The project used ASCE 31-03 and ASCE 41-06 with safety-based Performance Objectives. Many institutions, public and private, conduct similar assessments to inform their emergency response and capital improvement plans.
- San Francisco wood frame residential buildings. In 2009, San Francisco implemented an incentive program to encourage voluntary retrofit of certain residential buildings with soft or weak stories, which have a history of poor performance. Owners who complete a voluntary retrofit have fees waived and are exempt from future mandates for 15 years. The retrofit criteria include ASCE 41-06 with a Performance Objective of Life Safety Structural Performance Level with the BSE-1 hazard.

B.4 TRIGGERED MITIGATION

Triggered mitigation is mitigation required by a standing regulation, typically the building code, when certain qualifying, or "triggering," conditions are met. ASCE 41-13 is sometimes invoked as the criteria for triggered work and is sometimes allowed as an option.

In triggered cases, seismic mitigation is generally not part of the building owner's intended work. Rather, it is required as a condition of permitting the intended project. For example, the *International Building Code* requires seismic structural evaluation, and possibly retrofit, when an addition, change of occupancy, or extensive repair is made.

In concept, triggered mitigation is a combination of mandatory and voluntary work. To the extent that an owner avoids a triggering condition, the triggered mitigation is voluntary. Once the trigger is pulled, however, the work proceeds as if mandatory.

Triggers in current model building codes are based on conditions already regulated by the code, such as an increase in load, a decrease in capacity, an expectation of performance, or a change of occupancy. Some local codes use cost-based triggers as well, requiring seismic evaluation or retrofit when the cost of an intended alteration, for example, exceeds a specified amount.

B.4.1 Performance Objectives Because triggered mitigation involves compliance with a building code provision, the code sets the trigger, the scope of triggered work, and the criteria for that work. Where ASCE 41-13 is allowed or specified as a criterion, the triggering code provision specifies a Performance Objective.

Generally, the Performance Objectives for triggered work follow the building code's practice of setting criteria based on Risk Category, with essential or high-occupancy facilities subject to more aggressive requirements. ASCE 41-13's various performance and hazard levels can accommodate this approach.

In some cases, when a code triggers mitigation, it seeks performance, or compliance, similar to what it requires of new construction. ASCE 41-13's Basic Performance Objective Equivalent to New Building Standards (BPON) in Section 2.2.4 is suitable for this purpose. However, if the code only calls for structural mitigation or only requires compliance at a single hazard level, some parts of the BPON might not be triggered. For example, where code-level mitigation is triggered, the 2012 *International Existing Building Code* allows the use of ASCE 41-06 with a two-part structural objective, but it makes no nonstructural requirements. (In ASCE 41-13 terms, the triggered nonstructural performance level would be N-D, Not Considered.)

In other triggered cases, the model codes explicitly allow lesser performance. The 2012 *International Existing Building Code*, for example, allows retrofits triggered by repair projects to use either ASCE 31-03 or ASCE 41-06 with just the BSE-1 hazard. This method is akin to using ASCE 41-13 with just the BSE-1E hazard level. Thus, in these cases, the code's performance objective, unlike the BPON, involves only one hazard level, and that hazard is lower than the one that would be used for the design of similar new buildings. Also, nonstructural performance is again ignored by the triggering provision.

Local amendments to the model codes sometimes apply different performance objectives for certain classes of buildings.

B.4.2 Implementation Issues Where mitigation is triggered, it is subject to a jurisdiction's normal code enforcement practices. In this way, triggered mitigation presents many of the same implementation issues as mandatory mitigation, including the need for quality assurance, approvals, and inspections. Other implementation issues associated with triggered mitigation include the following:

- Enforcement of local amendments. Triggered mitigation generally starts with the building code. To the extent that model codes are modified locally, some of the triggers, triggered scope, and triggered criteria might vary between jurisdictions.
- Coordination with other code provisions. Triggered mitigation is often done as part of another intended project, such as a major alteration or repair. The other work is likely to be subject to building code provisions for new construction or unrelated to earthquake design at all, so coordination with the criteria of ASCE 41-13, including resolution of conflicting provisions, is often needed.

B.4.3 Historic Buildings Building codes typically waive the triggers or relax the triggered criteria for designated historic buildings. See, for examples, Section 3409 of the 2012 *International Building Code* or Chapter 12 of the 2012 *International Existing Building Code* .

B.4.4 Example Programs As discussed above, triggered mitigation is typically initiated through building code provisions that regulate other intended work, such as additions, alterations, repairs, or changes of occupancy. As described in Section B.3, some organizations have internal policies that are also based on triggers, but in terms of public policy, those institutional programs are voluntary.

In the United States, the leading model building codes are the *International Building Code* and the *International Existing Building Code* , both of which regulate existing buildings through code triggers. Where seismic evaluation or retrofit is triggered, these codes consider primarily structural performance. The IEBC is not, however, as widely adopted as the IBC, and many jurisdictions rely solely on existing building provisions of Chapter 34 of the IBC.

Where seismic evaluation or retrofit is triggered, the 2012 IEBC explicitly references ASCE 31-03 and ASCE 41-06 as potential criteria. The 2012 IBC does not, but it does allow the IEBC to be used as an alternative. A full description of the differences between the two model codes is beyond the scope of this appendix. One difference worth noting, however, is that in regions of relatively high seismicity, the IEBC triggers upgrades for unreinforced masonry parapets and concrete or masonry wall anchorage when buildings with these historic deficiencies are altered.

Local codes sometimes supplement the model code triggers, especially those based on building alterations. On alteration projects, the 2012 IBC and IEBC trigger seismic mitigation only when the intended alteration would make significant changes to the existing lateral system. Thus, a major architectural or mechanical upgrade that does not change the structure's seismic adequacy would not trigger any seismic improvements. Following are examples of local code provisions that amend the model codes to consider certain vulnerable structure types, the extent of a nonstructural alteration, or the cost of an alteration project.

- Federal government facilities. As noted in Section B.3.4, federal agencies use the recommended practice known as *RP 8* (NIST 2012), which relies on ASCE 31-03 and ASCE 41-06 for its technical criteria. Some agencies that act as their own code officials, such as the Department of Defense, apply *RP 8* as a code, supplementing a model code's triggers with *RP 8*'s additional triggers. For example, *RP 8* includes cost-based triggers not found in the model codes.
- California state-owned buildings. Sections 3417-3422 of the 2010 *California Building Code* provide supplemental provisions for state-owned buildings. In addition to modifying CBC's typical triggers based on repair and structural alteration, these provisions also trigger seismic evaluation and potential retrofit whenever the cost of a renovation exceeds 25% of the building replacement cost. The criteria apply ASCE 41-06, specifying Structural and Nonstructural Performance Levels at two Seismic Hazard Levels.
- Massachusetts unreinforced masonry buildings. In 2010, Massachusetts adopted the 2009 IEBC with amendments that address, among other things, the alteration and adaptive reuse of unreinforced masonry buildings. In Section 606.2, dealing with reroofing triggers, the state modified the IEBC provision to encompass a lower seismicity threshold than the model code. In Section 101.10, it modified the IEBC's change of occupancy trigger and added triggers for any project that significantly increases the occupant load or whose work area exceeds 50% of the building.
- Seattle substantial alterations. The 2009 Seattle Building Code amends Chapter 34 of the 2009 IBC. In addition to modifying the IBC's triggers based on repairs and change of occupancy, Section 3404.8 defines any project that substantially extends a building's useful life as a "substantial alteration" that triggers seismic evaluation and possibly retrofit. Identification of substantial alterations by the code official is based on case-specific considerations of the building size, the building condition, the scope and cost of

the proposed alteration, and other factors. Unreinforced brick chimneys in buildings undergoing substantial alterations must be retrofitted. Triggered structural evaluations are permitted to use ASCE 31-03 or ASCE 41-06 with a specified one-part Performance Objective involving a BSE-1 hazard. Where deficiencies are found, the retrofit scope and objective are subject to negotiation.

- Portland alteration triggers. The city of Portland, Oregon, adopted the 2009 IBC and amended its seismic provisions for existing buildings in Chapter 24.85 of the City Code and Charter. In addition to modifying the IBC's triggers based on repairs and change of occupancy, Section 24.85.060 requires a seismic evaluation using ASCE 31-03 for most pre-1974 buildings (other than 1- and 2-famliy dwellings) where the cost of the intended alteration exceeds a certain value. In addition, Section 24.85.065 addresses unreinforced masonry buildings, triggering parapet bracing and wall anchors upon reroofing and a full structural retrofit, again using ASCE 31-03 as a criterion, when the alteration cost exceeds a triggering value.

APPENDIX C
SUMMARY DATA SHEET

BUILDING DATA

Building Name: _____ Date: _____

Building Address: _____

Latitude: _____ Longitude: _____ By: _____

Year Built: _____ Year(s) Remodeled: _____ Original Design Code: _____

Area (sf): _____ Length (ft): _____ Width (ft): _____

No. of Stories: _____ Story Height: _____ Total Height: _____

USE ☐ Industrial ☐ Office ☐ Warehouse ☐ Hospital ☐ Residential ☐ Educational ☐ Other: _____

CONSTRUCTION DATA

Gravity Load Structural System: _____

Exterior Transverse Walls: _____ Openings? _____

Exterior Longitudinal Walls: _____ Openings? _____

Roof Materials/Framing: _____

Intermediate Floors/Framing: _____

Ground Floor: _____

Columns: _____ Foundation: _____

General Condition of Structure: _____

Levels Below Grade? _____

Special Features and Comments: _____

LATERAL-FORCE-RESISTING SYSTEM

	Longitudinal	Transverse
System:		
Vertical Elements:		
Diaphragms:		
Connections:		

EVALUATION DATA

BSE-1N Spectral Response Accelerations: S_{Ds} = _____ S_{D1} = _____

Soil Factors: Class = _____ F_a = _____ F_v = _____

BSE-1E Spectral Response Accelerations: S_{XS} = _____ S_{X1} = _____

Level of Seismicity: _____ Performance Level: _____

Building Period: T = _____

Spectral Acceleration: S_a = _____

Modification Factor: $C_mC_1C_2$ = _____ Building Weight: W = _____

Pseudo Lateral Force: V=

$C_mC_1C_2S_aW$= _____

BUILDING CLASSIFICATION: _____

REQUIRED TIER 1 CHECKLISTS	**Yes**	**No**
Basic Configuration Checklist	☐	☐
Building Type _____ Structural Checklist	☐	☐
Nonstructural Component Checklist	☐	☐

FURTHER EVALUATION REQUIREMENT: _____

Project: _____ Location: _____

Completed by: _____ Date: _____

TIER 1 CHECKLISTS

16.1 BASIC CHECKLIST

Very Low Seismicity

Structural Components

C NC N/A U LOAD PATH: The structure shall contain a complete, well-defined load path, including structural elements and connections, that serves to transfer the inertial forces associated with the mass of all elements of the building to the foundation. (Commentary: Sec. A.2.1.1. Tier 2: Sec. 5.4.1.1)

C NC N/A U WALL ANCHORAGE: Exterior concrete or masonry walls that are dependent on the diaphragm for lateral support are anchored for out-of-plane forces at each diaphragm level with steel anchors, reinforcing dowels, or straps that are developed into the diaphragm. Connections shall have adequate strength to resist the connection force calculated in the Quick Check procedure of Section 4.5.3.7. (Commentary: Sec. A.5.1.1. Tier 2: Sec. 5.7.1.1)

Project: _____ Location: _____

Completed by: _____ Date: _____

16.1.2LS LIFE SAFETY BASIC CONFIGURATION CHECKLIST

Low Seismicity

Building System

General

C NC N/A U LOAD PATH: The structure shall contain a complete, well defined load path, including structural elements and connections, that serves to transfer the inertial forces associated with the mass of all elements of the building to the foundation. (Commentary: Sec. A.2.1.1. Tier 2: Sec. 5.4.1.1)

C NC N/A U ADJACENT BUILDINGS: The clear distance between the building being evaluated and any adjacent building is greater than 4% of the height of the shorter building. This statement shall not apply for the following building types: W1, W1a, and W2. (Commentary: Sec. A.2.1.2. Tier 2: Sec. 5.4.1.2)

C NC N/A U MEZZANINES: Interior mezzanine levels are braced independently from the main structure or are anchored to the seismic-force-resisting elements of the main structure. (Commentary: Sec. A.2.1.3. Tier 2: Sec. 5.4.1.3)

Building Configuration

C NC N/A U WEAK STORY: The sum of the shear strengths of the seismic-force-resisting system in any story in each direction is not less than 80% of the strength in the adjacent story above. (Commentary: Sec. A2.2.2. Tier 2: Sec. 5.4.2.1)

C NC N/A U SOFT STORY: The stiffness of the seismic-force-resisting system in any story is not less than 70% of the seismic-force-resisting system stiffness in an adjacent story above or less than 80% of the average seismic-force-resisting system stiffness of the three stories above. (Commentary: Sec. A.2.2.3. Tier 2: Sec. 5.4.2.2)

C NC N/A U VERTICAL IRREGULARITIES: All vertical elements in the seismic-force-resisting system are continuous to the foundation. (Commentary: Sec. A.2.2.4. Tier 2: Sec. 5.4.2.3)

C NC N/A U GEOMETRY: There are no changes in the net horizontal dimension of the seismic-force-resisting system of more than 30% in a story relative to adjacent stories, excluding one-story penthouses and mezzanines. (Commentary: Sec. A.2.2.5. Tier 2: Sec. 5.4.2.4)

C NC N/A U MASS: There is no change in effective mass more than 50% from one story to the next. Light roofs, penthouses, and mezzanines need not be considered. (Commentary: Sec. A.2.2.6. Tier 2: Sec. 5.4.2.5)

C NC N/A U TORSION: The estimated distance between the story center of mass and the story center of rigidity is less than 20% of the building width in either plan dimension. (Commentary: Sec. A.2.2.7. Tier 2: Sec. 5.4.2.6)

Moderate Seismicity: Complete the Following Items in Addition to the Items for Low Seismicity.

Geologic Site Hazards

C NC N/A U LIQUEFACTION: Liquefaction-susceptible, saturated, loose granular soils that could jeopardize the building's seismic performance shall not exist in the foundation soils at depths within 50 ft under the building. (Commentary: Sec. A.6.1.1. Tier 2: 5.4.3.1)

C NC N/A U SLOPE FAILURE: The building site is sufficiently remote from potential earthquake-induced slope failures or rockfalls to be unaffected by such failures or is capable of accommodating any predicted movements without failure. (Commentary: Sec. A.6.1.2. Tier 2: 5.4.3.1)

C NC N/A U SURFACE FAULT RUPTURE: Surface fault rupture and surface displacement at the building site are not anticipated. (Commentary: Sec. A.6.1.3. Tier 2: 5.4.3.1)

High Seismicity: Complete the Following Items in Addition to the Items for Low and Moderate Seismicity.

Foundation Configuration

C NC N/A U OVERTURNING: The ratio of the least horizontal dimension of the seismic-force-resisting system at the foundation level to the building height (base/height) is greater than $0.6S_a$. (Commentary: Sec. A.6.2.1. Tier 2: Sec. 5.4.3.3)

C NC N/A U TIES BETWEEN FOUNDATION ELEMENTS: The foundation has ties adequate to resist seismic forces where footings, piles, and piers are not restrained by beams, slabs, or soils classified as Site Class A, B, or C. (Commentary: Sec. A.6.2.2. Tier 2: Sec. 5.4.3.4)

Project: _____ Location: _____

Completed by: _____ Date: _____

16.1.2IO IMMEDIATE OCCUPANCY BASIC CONFIGURATION CHECKLIST

Very Low Seismicity

Building System

General

C NC N/A U LOAD PATH: The structure shall contain a complete, well-defined load path, including structural elements and connections, that serves to transfer the inertial forces associated with the mass of all elements of the building to the foundation. (Commentary: Sec. A.2.1.1. Tier 2: Sec. 5.4.1.1)

C NC N/A U ADJACENT BUILDINGS: The clear distance between the building being evaluated and any adjacent building is greater than 4% of the height of the shorter building. This statement need not apply for the following building types: W1, W1a, and W2. (Commentary: Sec. A.2.1.2. Tier 2: Sec. 5.4.1.2)

C NC N/A U MEZZANINES: Interior mezzanine levels are braced independently from the main structure or are anchored to the seismic-force-resisting elements of the main structure. (Commentary: Sec. A.2.1.3. Tier 2: Sec. 5.4.1.3)

Building Configuration

C NC N/A U WEAK STORY: The sum of the shear strengths of the seismic-force-resisting system in any story in each direction shall not be less than 80% of the strength in the adjacent story above. (Commentary: Sec. A.2.2.2. Tier 2: Sec. 5.4.2.1)

C NC N/A U SOFT STORY: The stiffness of the seismic-force-resisting system in any story shall not be less than 70% of the seismic-force-resisting system stiffness in an adjacent story above or less than 80% of the average seismic-force-resisting system stiffnessof the three stories above. (Commentary: Sec. A.2.2.3. Tier 2: Sec. 5.4.2.2)

C NC N/A U VERTICAL IRREGULARITIES: All vertical elements in the seismic-force-resisting system are continuous to the foundation. (Commentary: Sec. A.2.2.4. Tier 2: Sec. 5.4.2.3)

C NC N/A U GEOMETRY: There are no changes in the net horizontal dimension of the seismic-force-resisting system of more than 30% in a story relative to adjacent stories, excluding one-story penthouses and mezzanines. (Commentary: Sec. A.2.2.5. Tier 2: Sec. 5.4.2.4)

C NC N/A U MASS: There is no change in effective mass more than 50% from one story to the next. Light roofs, penthouses, and mezzanines need not be considered. (Commentary: Sec. A.2.2.6. Tier 2: Sec. 5.4.2.5)

C NC N/A U TORSION: The estimated distance between the story center of mass and the story center of rigidity is less than 20% of the building width in either plan dimension. (Commentary: Sec. A.2.2.7. Tier 2: Sec. 5.4.2.6)

Low Seismicity: Complete the Following Items in Additionto the Items for Very Low Seismicity.

Geologic Site Hazards

C NC N/A U LIQUEFACTION: Liquefaction-susceptible, saturated, loose granular soils that could jeopardize the building's seismic performance shall not exist in the foundation soils at depths within 50 ft under the building. (Commentary: Sec. A.6.1.1. Tier 2: 5.4.3.1)

C NC N/A U SLOPE FAILURE: The building site is sufficiently remote from potential earthquake-induced slope failures or rockfalls to be unaffected by such failures or is capable of accommodating any predicted movements without failure. (Commentary: Sec. A.6.1.2. Tier 2: 5.4.3.1)

C NC N/A U SURFACE FAULT RUPTURE: Surface fault rupture and surface displacement at the building site are not anticipated. (Commentary: Sec. A.6.1.3. Tier 2: 5.4.3.1)

Moderate and High Seismicity: Complete the Following Items in Addition to the Items for Low Seismicity.

Foundation Configuration

C NC N/A U OVERTURNING: The ratio of the least horizontal dimension of the seismic-force-resisting system at the foundation level to the building height (base/height) is greater than $0.6S_a$. (Commentary: Sec. A.6.2.1. Tier 2: Sec. 5.4.3.3)

C NC N/A U TIES BETWEEN FOUNDATION ELEMENTS: The foundation has ties adequate to resist seismic forces where footings, piles, and piers are not restrained by beams, slabs, or soils classified as Site Class A, B, or C. (Commentary: Sec. A.6.2.2. Tier 2: Sec. 5.4.3.4)

Project: _____ Location: _____

Completed by: _____ Date: _____

16.2LS LIFE SAFETY STRUCTURAL CHECKLIST FOR BUILDING TYPES W1: WOOD LIGHT FRAMES AND W1A: MULTI-STORY, MULTI-UNIT RESIDENTIAL WOOD FRAME

Low and Moderate Seismicity

Seismic-Force-Resisting System

C NC N/A U REDUNDANCY: The number of lines of shear walls in each principal direction is greater than or equal to 2. (Commentary: Sec. A.3.2.1.1. Tier 2: Sec. 5.5.1.1)

C NC N/A U SHEAR STRESS CHECK: The shear stress in the shear walls, calculated using the Quick Check procedure of Section 4.5.3.3, is less than the following values (Commentary: Sec. A.3.2.7.1. Tier 2: Sec. 5.5.3.1.1):

Structural panel sheathing	1,000 lb/ft
Diagonal sheathing	700 lb/ft
Straight sheathing	100 lb/ft
All other conditions	100 lb/ft

C NC N/A U STUCCO (EXTERIOR PLASTER) SHEAR WALLS: Multi-story buildings do not rely on exterior stucco walls as the primary seismic-force-resisting system. (Commentary: Sec. A.3.2.7.2. Tier 2: Sec. 5.5.3.6.1)

C NC N/A U GYPSUM WALLBOARD OR PLASTER SHEAR WALLS: Interior plaster or gypsum wallboard are not used as shear walls on buildings more than one story high with the exception of the uppermost level of a multi-story building. (Commentary: Sec. A.3.2.7.3. Tier 2: Sec. 5.5.3.6.1)

C NC N/A U NARROW WOOD SHEAR WALLS: Narrow wood shear walls with an aspect ratio greater than 2-to-1 are not used to resist seismic forces. (Commentary: Sec. A.3.2.7.4. Tier 2: Sec. 5.5.3.6.1)

C NC N/A U WALLS CONNECTED THROUGH FLOORS: Shear walls have an interconnection between stories to transfer overturning and shear forces through the floor. (Commentary: Sec. A.3.2.7.5. Tier 2: Sec. 5.5.3.6.2)

C NC N/A U HILLSIDE SITE: For structures that are taller on at least one side by more than one-half story because of a sloping site, all shear walls on the downhill slope have an aspect ratio less than 1-to-1. (Commentary: Sec. A.3.2.7.6. Tier 2: Sec. 5.5.3.6.3)

C NC N/A U CRIPPLE WALLS: Cripple walls below first-floor-level shear walls are braced to the foundation with wood structural panels. (Commentary: Sec. A.3.2.7.7. Tier 2: Sec. 5.5.3.6.4)

C NC N/A U OPENINGS: Walls with openings greater than 80% of the length are braced with wood structural panel shear walls with aspect ratios of not more than 1.5-to-1 or are supported by adjacent construction through positive ties capable of transferring the seismic forces. (Commentary: Sec. A.3.2.7.8. Tier 2: Sec. 5.5.3.6.5)

Connections

C NC N/A U WOOD POSTS: There is a positive connection of wood posts to the foundation. (Commentary: Sec. A.5.3.3. Tier 2: Sec. 5.7.3.3)

C NC N/A U WOOD SILLS: All wood sills are bolted to the foundation. (Commentary: Sec. A.5.3.4. Tier 2: Sec. 5.7.3.3)

C NC N/A U GIRDER/COLUMN CONNECTION: There is a positive connection using plates, connection hardware, or straps between the girder and the column support. (Commentary: Sec. A.5.4.1. Tier 2: Sec. 5.7.4.1)

High Seismicity: Complete the Following Items in Addition to the Items for Low and Moderate Seismicity.

Connections

C NC N/A U WOOD SILL BOLTS: Sill bolts are spaced at 6 ft or less with proper edge and end distance provided for wood and concrete. (Commentary: Sec. A.5.3.7. Tier 2: Sec. 5.7.3.3)

Diaphragms

C NC N/A U DIAPHRAGM CONTINUITY: The diaphragms are not composed of split-level floors and do not have expansion joints. (Commentary: Sec. A.4.1.1. Tier 2: Sec. 5.6.1.1)

C NC N/A U ROOF CHORD CONTINUITY: All chord elements are continuous, regardless of changes in roof elevation. (Commentary: Sec. A.4.1.3. Tier 2: Sec. 5.6.1.1)

C NC N/A U STRAIGHT SHEATHING: All straight sheathed diaphragms have aspect ratios less than 2-to-1 in the direction being considered. (Commentary: Sec. A.4.2.1. Tier 2: Sec. 5.6.2)

C NC N/A U SPANS: All wood diaphragms with spans greater than 24 ft consist of wood structural panels or diagonal sheathing. (Commentary: Sec. A.4.2.2. Tier 2: Sec. 5.6.2)

C NC N/A U DIAGONALLY SHEATHED AND UNBLOCKED DIAPHRAGMS: All diagonally sheathed or unblocked wood structural panel diaphragms have horizontal spans less than 40 ft and shall have aspect ratios less than or equal to 4-to-1. (Commentary: Sec. A.4.2.3. Tier 2: Sec. 5.6.2)

C NC N/A U OTHER DIAPHRAGMS: The diaphragms do not consist of a system other than wood, metal deck, concrete, or horizontal bracing. (Commentary: Sec. A.4.7.1. Tier 2: Sec. 5.6.5)

Project: _____ Location: _____

Completed by: _____ Date: _____

16.2IO IMMEDIATE OCCUPANCY STRUCTURAL CHECKLIST FOR BUILDING TYPES W1: WOOD LIGHT FRAMES AND W1A: MULTI-STORY, MULTI-UNIT RESIDENTIAL WOOD FRAME

Very Low Seismicity

Seismic-Force-Resisting System

C NC N/A U REDUNDANCY: The number of lines of shear walls in each principal direction is greater than or equal to 2. (Commentary: Sec. A.3.2.1.1. Tier 2: Sec. 5.5.1.1)

C NC N/A U SHEAR STRESS CHECK: The shear stress in the shear walls, calculated using the Quick Check procedure of Section 4.5.3.3, is less than the following values (Commentary: Sec. A.3.2.7.1. Tier 2: Sec. 5.5.3.1.1):

Structural panel sheathing	1,000 lb/ft
Diagonal sheathing	700 lb/ft
Straight sheathing	100 lb/ft
All other conditions	100 lb/ft

C NC N/A U STUCCO (EXTERIOR PLASTER) SHEAR WALLS: Multi-story buildings do not rely on exterior stucco walls as the primary seismic-force-resisting system. (Commentary: Sec. A.3.2.7.2. Tier 2: Sec. 5.5.3.6.1)

C NC N/A U GYPSUM WALLBOARD OR PLASTER SHEAR WALLS: Interior plaster or gypsum wallboard are not used as shear walls on buildings more than one story high with the exception of the uppermost level of a multi-story building. (Commentary: Sec. A.3.2.7.3. Tier 2: Sec. 5.5.3.6.1)

C NC N/A U NARROW WOOD SHEAR WALLS: Narrow wood shear walls with an aspect ratio greater than 2-to-1 are not used to resist seismic forces. (Commentary: Sec. A.3.2.7.4. Tier 2: Sec. 5.5.3.6.1)

C NC N/A U WALLS CONNECTED THROUGH FLOORS: Shear walls have an interconnection between stories to transfer overturning and shear forces through the floor. (Commentary: Sec. A.3.2.7.5. Tier 2: Sec.5.5.3.6.2)

C NC N/A U HILLSIDE SITE: For structures that are taller on at least one side by more than one-half story because of a sloping site, all shear walls on the downhill slope have an aspect ratio less than 1 to 2. (Commentary: Sec. A.3.2.7.6. Tier 2: Sec.5.5.3.6.3)

C NC N/A U CRIPPLE WALLS: Cripple walls below first-floor-level shear walls are braced to the foundation with wood structural panels. (Commentary: Sec. A.3.2.7.7. Tier 2: Sec. 5.5.3.6.4)

C NC N/A U OPENINGS: Walls with openings greater than 80% of the length are braced with wood structural panel shear walls with aspect ratios of not more than 1.5-to-1 or are supported by adjacent construction through positive ties capable of transferring the seismic forces. (Commentary: Sec. A.3.2.7.8. Tier 2: Sec. 5.5.3.6.5)

Connections

C NC N/A U WOOD POSTS: There is a positive connection of wood posts to the foundation. (Commentary: Sec. A.5.3.3. Tier 2: Sec. 5.7.3.3)

C NC N/A U WOOD SILLS: All wood sills are bolted to the foundation. (Commentary: Sec. A.5.3.4. Tier 2: Sec. 5.7.3.3)

C NC N/A U GIRDER/COLUMN CONNECTION: There is a positive connection using plates, connection hardware, or straps between the girder and the column support. (Commentary: Sec. A.5.4.1. Tier 2: Sec. 5.7.4.1)

Foundation System

C NC N/A U DEEP FOUNDATIONS: Piles and piers are capable of transferring the lateral forces between the structure and the soil. (Commentary: Sec. A.6.2.3.)

C NC N/A U SLOPING SITES: The difference in foundation embedment depth from one side of the building to another shall not exceed one story high. (Commentary: Sec. A.6.2.4)

Low, Moderate, and High Seismicity: Complete the Following Items in Addition to the Items for Very Low Seismicity.

Seismic-Force-Resisting System

C NC N/A U HOLD-DOWN ANCHORS: All shear walls have hold-down anchors, constructed per acceptable construction practices, attached to the end studs. (Commentary: Sec. A.3.2.7.9. Tier 2: Sec. 5.5.3.6.6)

C NC N/A U NARROW WOOD SHEAR WALLS: Narrow wood shear walls with an aspect ratio greater than 1.5-to-1 are not used to resist seismic forces. (Commentary: Sec. A.3.2.7.4. Tier 2: Sec. 5.5.3.6.1)

Diaphragms

C NC N/A U DIAPHRAGM CONTINUITY: The diaphragms are not composed of split-level floors and do not have expansion joints. (Commentary: Sec. A.4.1.1. Tier 2: Sec. 5.6.1.1)

C NC N/A U ROOF CHORD CONTINUITY: All chord elements are continuous, regardless of changes in roof elevation. (Commentary: Sec. A.4.1.3. Tier 2: Sec. 5.6.1.1)

C NC N/A U PLAN IRREGULARITIES: There is tensile capacity to develop the strength of the diaphragm at reentrant corners or other locations of plan irregularities. (Commentary: Sec. A.4.1.7. Tier 2: Sec. 5.6.1.4)

C NC N/A U DIAPHRAGM REINFORCEMENT AT OPENINGS: There is reinforcing around all diaphragm openings larger than 50% of the building width in either major plan dimension. (Commentary: Sec. A.4.1.8. Tier 2: Sec. 5.6.1.5)

C NC N/A U STRAIGHT SHEATHING: All straight sheathed diaphragms have aspect ratios less than 1-to-1 in the direction being considered. (Commentary: Sec. A.4.2.1. Tier 2: Sec. 5.6.2)

C NC N/A U SPANS: All wood diaphragms with spans greater than 12 ft consist of wood structural panels or diagonal sheathing. (Commentary: Sec. A.4.2.2. Tier 2: Sec. 5.6.2)

C NC N/A U DIAGONALLY SHEATHED AND UNBLOCKED DIAPHRAGMS: All diagonally sheathed or unblocked wood structural panel diaphragms have horizontal spans less than 30 ft and aspect ratios less than or equal to 3-to-1 ft. (Commentary: Sec. A.4.2.3. Tier 2: Sec. 5.6.2)

C NC N/A U OTHER DIAPHRAGMS: The diaphragm does not consist of a system other than wood, metal deck, concrete, or horizontal bracing. (Commentary: Sec. A.4.7.1. Tier 2: Sec. 5.6.5)

Connections

C NC N/A U WOOD SILL BOLTS: Sill bolts are spaced at 4 ft or less, with proper edge and end distance provided for wood and concrete. (Commentary: Sec. A.5.3.7. Tier 2: Sec. 5.7.3.3)

Project: _____ Location: _____

Completed by: _____ Date: _____

16.3LS LIFE SAFETY STRUCTURAL CHECKLIST FOR BUILDING TYPE W2: WOOD FRAMES, COMMERCIAL AND INDUSTRIAL

Low and Moderate Seismicity

Lateral Seismic-Force-Resisting System

C NC N/A U REDUNDANCY: The number of lines of shear walls in each principal direction is greater than or equal to 2. (Commentary: Sec. A.3.2.1.1. Tier 2: Sec. 5.5.1.1)

C NC N/A U SHEAR STRESS CHECK: The shear stress in the shear walls, calculated using the Quick Check procedure of Section 4.5.3.3, is less than the following values (Commentary: Sec. A.3.2.7.1. Tier 2: Sec. 5.5.3.1.1):

Structural panel sheathing	1,000 lb/ft
Diagonal sheathing	700 lb/ft
Straight sheathing	100 lb/ft
All other conditions	100 lb/ft

C NC N/A U STUCCO (EXTERIOR PLASTER) SHEAR WALLS: Multi-story buildings do not rely on exterior stucco walls as the primary seismic-force-resisting system. (Commentary: Sec. A.3.2.7.2. Tier 2: Sec. 5.5.3.6.1)

C NC N/A U GYPSUM WALLBOARD OR PLASTER SHEAR WALLS: Interior plaster or gypsum wallboard is not used as shear walls on buildings more than one story high with the exception of the uppermost level of a multi-story building. (Commentary: Sec. A.3.2.7.3. Tier 2: Sec. 5.5.3.6.1)

C NC N/A U NARROW WOOD SHEAR WALLS: Narrow wood shear walls with an aspect ratio greater than 2-to-1 are not used to resist seismic forces. (Commentary: Sec. A.3.2.7.4. Tier 2: Sec. 5.5.3.6.1)

C NC N/A U WALLS CONNECTED THROUGH FLOORS: Shear walls have an interconnection between stories to transfer overturning and shear forces through the floor. (Commentary: Sec. A.3.2.7.5. Tier 2: Sec.5.5.3.6.2)

C NC N/A U HILLSIDE SITE: For structures that are taller on at least one side by more than one-half story because of a sloping site, all shear walls on the downhill slope have an aspect ratio less than 1-to-1. (Commentary: Sec. A.3.2.7.6. Tier 2: Sec. 5.5.3.6.3)

C NC N/A U CRIPPLE WALLS: Cripple walls below first-floor-level shear walls are braced to the foundation with wood structural panels. (Commentary: Sec. A.3.2.7.7. Tier 2: Sec. 5.5.3.6.4)

C NC N/A U OPENINGS: Walls with openings greater than 80% of the length are braced with wood structural panel shear walls with aspect ratios of not more than 1.5-to-1 or are supported by adjacent construction through positive ties capable of transferring the seismic forces. (Commentary: Sec. A.3.2.7.8. Tier 2: Sec. 5.5.3.6.5)

Connections

C NC N/A U WOOD POSTS: There is a positive connection of wood posts to the foundation. (Commentary: Sec. A.5.3.3. Tier 2: Sec. 5.7.3.3)

C NC N/A U WOOD SILLS: All wood sills are bolted to the foundation. (Commentary: Sec. A.5.3.4. Tier 2: Sec. 5.7.3.3)

C NC N/A U GIRDER/COLUMN CONNECTION: There is a positive connection using plates, connection hardware, or straps between the girder and the column support. (Commentary: Sec. A.5.4.1. Tier 2: Sec. 5.7.4.1)

High Seismicity: Complete the Following Items in Addition to the Items for Low and Moderate Seismicity.

Diaphragms

C NC N/A U DIAPHRAGM CONTINUITY: The diaphragms are not composed of split-level floors and do not have expansion joints. (Commentary: Sec. A.4.1.1. Tier 2: Sec. 5.6.1.1)

C NC N/A U ROOF CHORD CONTINUITY: All chord elements are continuous, regardless of changes in roof elevation. (Commentary: Sec. A.4.1.3. Tier 2: Sec. 5.6.1.1)

C NC N/A U DIAPHRAGM REINFORCEMENT AT OPENINGS: There is reinforcing around all diaphragm openings larger than 50% of the building width in either major plan dimension. (Commentary: Sec. A.4.1.8. Tier 2: Sec. 5.6.1.5)

C NC N/A U STRAIGHT SHEATHING: All straight sheathed diaphragms have aspect ratios less than 2-to-1 in the direction being considered. (Commentary: Sec. A.4.2.1. Tier 2: Sec. 5.6.2)

C NC N/A U SPANS: All wood diaphragms with spans greater than 24 ft consist of wood structural panels or diagonal sheathing. Wood commercial and industrial buildings may have rod-braced systems. (Commentary: Sec. A.4.2.2. Tier 2: Sec. 5.6.2)

C NC N/A U DIAGONALLY SHEATHED AND UNBLOCKED DIAPHRAGMS: All diagonally sheathed or unblocked wood structural panel diaphragms have horizontal spans less than 40 ft and aspect ratios less than or equal to 4-to-1. (Commentary: Sec. A.4.2.3. Tier 2: Sec. 5.6.2)

C NC N/A U OTHER DIAPHRAGMS: The diaphragm does not consist of a system other than wood, metal deck, concrete, or horizontal bracing. (Commentary: Sec. A.4.7.1. Tier 2: Sec. 5.6.5)

Connections

C NC N/A U WOOD SILL BOLTS: Sill bolts are spaced at 6 ft or less, with proper edge and end distance provided for wood and concrete. (Commentary: A.5.3.7. Tier 2: Sec. 5.7.3.3)

Project: _____ Location: _____

Completed by: _____ Date: _____

16.3IO IMMEDIATE OCCUPANCY STRUCTURAL CHECKLIST FOR BUILDING TYPE W2: WOOD FRAMES, COMMERCIAL AND INDUSTRIAL

Very Low Seismicity

Seismic-Force-Resisting System

C NC N/A U REDUNDANCY: The number of lines of shear walls in each principal direction is greater than or equal to 2. (Commentary: Sec. A.3.2.1.1. Tier 2: Sec. 5.5.1.1)

C NC N/A U SHEAR STRESS CHECK: The shear stress in the shear walls, calculated using the Quick Check procedure of Section 4.5.3.3, is less than the following values (Commentary: Sec. A.3.2.7.1. Tier 2: Sec. 5.5.3.1.1):

Structural panel sheathing	1,000 lb/ft
Diagonal sheathing	700 lb/ft
Straight sheathing	100 lb/ft
All other conditions	100 lb/ft

C NC N/A U STUCCO (EXTERIOR PLASTER) SHEAR WALLS: Multi-story buildings do not rely on exterior stucco walls as the primary seismic-force-resisting system. (Commentary: Sec. A.3.2.7.2. Tier 2: Sec. 5.5.3.6.1)

C NC N/A U GYPSUM WALLBOARD OR PLASTER SHEAR WALLS: Interior plaster or gypsum wallboard is not used as shear walls on buildings more than one story high with the exception of the uppermost level of a multi-story building. (Commentary: Sec. A.3.2.7.3. Tier 2: Sec. 5.5.3.6.1)

C NC N/A U NARROW WOOD SHEAR WALLS: Narrow wood shear walls with an aspect ratio greater than 2-to-1 are not used to resist seismic forces. (Commentary: Sec. A.3.2.7.4. Tier 2: Sec. 5.5.3.6.1)

C NC N/A U WALLS CONNECTED THROUGH FLOORS: Shear walls have an interconnection between stories to transfer overturning and shear forces through the floor. (Commentary: Sec. A.3.2.7.5. Tier 2: Sec. 5.5.3.6.2)

C NC N/A U HILLSIDE SITE: For structures that are taller on at least one side by more than one-half story because of a sloping site, all shear walls on the downhill slope have an aspect ratio less than 1-to-2. (Commentary: Sec. A.3.2.7.6. Tier 2: Sec. 5.5.3.6.3)

C NC N/A U CRIPPLE WALLS: Cripple walls below first-floor-level shear walls are braced to the foundation with wood structural panels. (Commentary: Sec. A.3.2.7.7. Tier 2: Sec. 5.5.3.6.4)

C NC N/A U OPENINGS: Walls with openings greater than 80% of the length are braced with wood structural panel shear walls with aspect ratios of not more than 1.5-to-1 or are supported by adjacent construction through positive ties capable of transferring the seismic forces. (Commentary: Sec. A.3.2.7.8. Tier 2: Sec. 5.5.3.6.5)

C NC N/A U HOLD-DOWN ANCHORS: All shear walls have hold-down anchors, constructed per acceptable construction practices, attached to the end studs. (Commentary: Sec. A.3.2.7.9. Tier 2: Sec. 5.5.3.6.6)

Connections

C NC N/A U WOOD POSTS: There is a positive connection of wood posts to the foundation. (Commentary: Sec. A.5.3.3. Tier 2: Sec. 5.7.3.3)

C NC N/A U WOOD SILLS: All wood sills are bolted to the foundation. (Commentary: Sec. A.5.3.4. Tier 2: Sec. 5.7.3.3)

C NC N/A U GIRDER/COLUMN CONNECTION: There is a positive connection using plates, connection hardware, or straps between the girder and the column support. (Commentary: Sec. A.5.4.1. Tier 2: Sec. 5.7.4.1)

Foundation System

C NC N/A U DEEP FOUNDATIONS: Piles and piers are capable of transferring the lateral forces between the structure and the soil. (Commentary: Sec. A.6.2.3.)

C NC N/A U SLOPING SITES: The difference in foundation embedment depth from one side of the building to another shall not exceed one story high. (Commentary: Sec. A.6.2.4)

Low, Moderate, and High Seismicity: Complete the Following Items in Addition to the Items for Very Low Seismicity.

Seismic-Force-Resisting System

C NC N/A U NARROW WOOD SHEAR WALLS: Narrow wood shear walls with an aspect ratio greater than 1.5-to-1 are not used to resist seismic forces. (Commentary: Sec. A.3.2.7.4. Tier 2: Sec. 5.5.3.6.1)

Diaphragms

C NC N/A U DIAPHRAGM CONTINUITY: The diaphragms are not composed of split-level floors and do not have expansion joints. (Commentary: Sec. A.4.1.1. Tier 2: Sec. 5.6.1.1)

C NC N/A U ROOF CHORD CONTINUITY: All chord elements are continuous, regardless of changes in roof elevation. (Commentary: Sec. A.4.1.3. Tier 2: Sec. 5.6.1.1)

C NC N/A U PLAN IRREGULARITIES: There is tensile capacity to develop the strength of the diaphragm at reentrant corners or other locations of plan irregularities. (Commentary: Sec. A.4.1.7. Tier 2: Sec. 5.6.1.4)

C NC N/A U DIAPHRAGM REINFORCEMENT AT OPENINGS: There is reinforcing around all diaphragm openings larger than 50% of the building width in either major plan dimension. (Commentary: Sec. A.4.1.8. Tier 2: Sec. 5.6.1.5)

C NC N/A U STRAIGHT SHEATHING: All straight sheathed diaphragms have aspect ratios less than 1-to-1 in the direction being considered. (Commentary: Sec. A.4.2.1. Tier 2: Sec. 5.6.2)

C NC N/A U SPANS: All wood diaphragms with spans greater than 12 ft consist of wood structural panels or diagonal sheathing. Wood commercial and industrial buildings may have rod-braced systems. (Commentary: Sec. A.4.2.2. Tier 2: Sec. 5.6.2)

C NC N/A U DIAGONALLY SHEATHED AND UNBLOCKED DIAPHRAGMS: All diagonally sheathed or unblocked wood structural panel diaphragms have horizontal spans less than 30 ft and aspect ratios less than or equal to 3-to-1. (Commentary: Sec. A.4.2.3. Tier 2: Sec. 5.6.2)

C NC N/A U OTHER DIAPHRAGMS: The diaphragm does not consist of a system other than wood, metal deck, concrete, or horizontal bracing. (Commentary: Sec. A.4.7.1. Tier 2: Sec. 5.6.5)

Connections

C NC N/A U WOOD SILL BOLTS: Sill bolts are spaced at 4 ft or less, with proper edge and end distance provided for wood and concrete. (Commentary: Sec. A.5.3.7. Tier 2: Sec. 5.7.3.3)

Project: _____ Location: _____

Completed by: _____ Date: _____

16.4LS LIFE SAFETY STRUCTURAL CHECKLIST FOR BUILDING TYPES S1: STEEL MOMENT FRAMES WITH STIFF DIAPHRAGMS AND S1A: STEEL MOMENT FRAMES WITH FLEXIBLE DIAPHRAGMS

Low Seismicity

Seismic-Force-Resisting System

C NC N/A U DRIFT CHECK: The drift ratio of the steel moment frames, calculated using the Quick Check procedure of Section 4.5.3.1, is less than 0.025. (Commentary: Sec. A.3.1.3.1. Tier 2: Sec. 5.5.2.1.2)

C NC N/A U COLUMN AXIAL STRESS CHECK: The axial stress caused by gravity loads in columns subjected to overturning forces is less than $0.10F_y$. Alternatively, the axial stress caused by overturning forces alone, calculated using the Quick Check procedure of Section 4.5.3.6, is less than $0.30F_y$. (Commentary: Sec. A.3.1.3.2. Tier 2: Sec. 5.5.2.1.3)

C NC N/A U FLEXURAL STRESS CHECK: The average flexural stress in the moment frame columns and beams, calculated using the Quick Check procedure of Section 4.5.3.9, is less than F_y. Columns need not be checked if the strong column–weak beam checklist item is compliant. (Commentary: Sec. A.3.1.3.3. Tier 2: Sec. 5.5.2.1.2)

Connections

C NC N/A U TRANSFER TO STEEL FRAMES: Diaphragms are connected for transfer of seismic forces to the steel frames. (Commentary: Sec. A.5.2.2. Tier 2: Sec. 5.7.2)

C NC N/A U STEEL COLUMNS: The columns in seismic-force-resisting frames are anchored to the building foundation. (Commentary: Sec. A.5.3.1. Tier 2: Sec. 5.7.3.1)

Moderate Seismicity: Complete the Following Items in Addition to the Items for Low Seismicity.

Seismic-Force-Resisting System

C NC N/A U REDUNDANCY: The number of lines of moment frames in each principal direction is greater than or equal to 2. The number of bays of moment frames in each line is greater than or equal to 2. (Commentary: Sec. A.3.1.1.1. Tier 2: Sec. 5.5.1.1)

C NC N/A U INTERFERING WALLS: All concrete and masonry infill walls placed in moment frames are isolated from structural elements. (Commentary: Sec. A.3.1.2.1. Tier 2: Sec. 5.5.2.1.1)

C NC N/A U MOMENT-RESISTING CONNECTIONS: All moment connections are able to develop the strength of the adjoining members based on the specified minimum yield stress of steel. (Commentary: Sec. A.3.1.3.4. Tier 2: Sec. 5.5.2.2.1). Note: more restrictive requirements for High Seismicity.

High Seismicity: Complete the Following Items in Addition to the Items for Low and Moderate Seismicity.

Seismic-Force-Resisting System

C NC N/A U MOMENT-RESISTING CONNECTIONS: All moment connections are able to develop the strength of the adjoining members or panel zones based on 110% of the expected yield stress of the steel per AISC 341, Section A3.2. (Commentary: Sec. A.3.1.3.4. Tier 2: Sec. 5.5.2.2.1)

C NC N/A U PANEL ZONES: All panel zones have the shear capacity to resist the shear demand required to develop 0.8 times the sum of the flexural strengths of the girders framing in at the face of the column. (Commentary: Sec. A.3.1.3.5. Tier 2: Sec. 5.5.2.2.2)

C NC N/A U COLUMN SPLICES: All column splice details located in moment-resisting frames include connection of both flanges and the web. (Commentary: Sec. A.3.1.3.6. Tier 2: Sec. 5.5.2.2.3)

C NC N/A U STRONG COLUMN—WEAK BEAM: The percentage of strong column–weak beam joints in each story of each line of moment frames is greater than 50%. (Commentary: Sec. A.3.1.3.7. Tier 2: Sec. 5.5.2.1.5)

C NC N/A U COMPACT MEMBERS: All frame elements meet section requirements set forth by AISC 341 Table D1.1, for moderately ductile members. (Commentary: Sec. A.3.1.3.8. Tier 2: Sec. 5.5.2.2.4)

Diaphragms (Stiff or Flexible)

C NC N/A U OPENINGS AT FRAMES: Diaphragm openings immediately adjacent to the moment frames extend less than 25% of the total frame length. (Commentary: Sec. A.4.1.5. Tier 2: Sec. 5.6.1.3)

Flexible Diaphragms

C NC N/A U CROSS TIES: There are continuous cross ties between diaphragm chords. (Commentary: Sec. A.4.1.2. Tier 2: Sec. 5.6.1.2)

C NC N/A U STRAIGHT SHEATHING: All straight sheathed diaphragms have aspect ratios less than 2-to-1 in the direction being considered. (Commentary: Sec. A.4.2.1. Tier 2: Sec. 5.6.2)

C NC N/A U SPANS: All wood diaphragms with spans greater than 24 ft consist of wood structural panels or diagonal sheathing. (Commentary: Sec. A.4.2.2. Tier 2: Sec. 5.6.2)

C NC N/A U DIAGONALLY SHEATHED AND UNBLOCKED DIAPHRAGMS: All diagonally sheathed or unblocked wood structural panel diaphragms have horizontal spans less than 40 ft and aspect ratios less than or equal to 4-to-1. (Commentary: Sec. A.4.2.3. Tier 2: Sec. 5.6.2)

C NC N/A U OTHER DIAPHRAGMS: The diaphragm does not consist of a system other than wood, metal deck, concrete, or horizontal bracing. (Commentary: Sec. A.4.7.1. Tier 2: Sec. 5.6.5)

Project: _____ Location: _____

Completed by: _____ Date: _____

16.4IO IMMEDIATE OCCUPANCY STRUCTURAL CHECKLIST FOR BUILDING TYPES S1: STEEL MOMENT FRAMES WITH STIFF DIAPHRAGMS AND S1A: STEEL MOMENT FRAMES WITH FLEXIBLE DIAPHRAGMS

Very Low Seismicity

Seismic-Force-Resisting System

C NC N/A U DRIFT CHECK: The drift ratio of the steel moment frames, calculated using the Quick Check procedure of Section 4.5.3.1, is less than 0.015. (Commentary: Sec. A.3.1.3.1. Tier 2: Sec. 5.5.2.1.2)

C NC N/A U COLUMN AXIAL STRESS CHECK: The axial stress caused by gravity loads in columns subjected to overturning forces is less than $0.10F_y$. Alternatively, the axial stress caused by overturning forces alone, calculated using the Quick Check procedure of Section 4.5.3.6, is less than $0.30F_y$. (Commentary: Sec. A.3.1.3.2. Tier 2: Sec. 5.5.2.1.3)

C NC N/A U FLEXURAL STRESS CHECK: The average flexural stress in the moment frame columns and beams, calculated using the Quick Check procedure of Section 4.5.3.9, is less than F_y. Columns need not be checked if the strong column—weak beam checklist item is compliant. (Commentary: Sec. A.3.1.3.3. Tier 2: Sec. 5.5.2.1.2)

Connections

C NC N/A U STEEL COLUMNS: The columns in seismic-force-resisting frames are anchored to the building foundation. (Commentary: Sec. A.5.3.1. Tier 2: Sec. 5.7.3.1)

Low Seismicity: Complete the Following Items in Addition to the Items for Very Low Seismicity.

Seismic-Force-Resisting System

C NC N/A U REDUNDANCY: The number of lines of moment frames in each principal direction is greater than or equal to 2. The number of bays of moment frames in each line is greater than or equal to 3. (Commentary: Sec. A.3.1.1.1. Tier 2: Sec. 5.5.1.1)

C NC N/A U INTERFERING WALLS: All concrete and masonry infill walls placed in moment frames are isolated from structural elements. (Commentary: Sec. A.3.1.2.1. Tier 2: Sec. 5.5.2.1.1)

Connections

C NC N/A U TRANSFER TO STEEL FRAMES: Diaphragms are connected for transfer of seismic forces to the steel frames, and the connections are able to develop the lesser of the strength of the frames or the diaphragms. (Commentary: Sec. A.5.2.2. Tier 2: Sec. 5.7.2)

C NC N/A U STEEL COLUMNS: The columns in seismic-force-resisting frames are anchored to the building foundation, and the anchorage is able to develop the least of the tensile capacity of the column, the tensile capacity of the lowest level column splice (if any), or the uplift capacity of the foundation. (Commentary: Sec. A.5.3.1. Tier 2: Sec. 5.7.3.1)

Moderate Seismicity: Complete the Following Items in Addition to the Items for Very Low and Low Seismicity.

Seismic-Force-Resisting System

C NC N/A U MOMENT-RESISTING CONNECTIONS: All moment connections are able to develop the expected strength of the adjoining members based on the specified minimum yield stress of the steel. (Commentary: Sec. A.3.1.3.4. Tier 2: Sec. 5.5.2.2.1). Note: more restrictive requirements for High Seismicity.

C NC N/A U PANEL ZONES: All panel zones have the shear capacity to resist the shear demand required to develop 0.8 times the sum of the flexural strengths of the girders framing in at the face of the column. (Commentary: Sec. A.3.1.3.5. Tier 2: Sec. 5.5.2.2.2)

C NC N/A U COLUMN SPLICES: All column splice details located in moment frames include connection of both flanges and the web, and the splice develops the strength of the column. (Commentary: Sec. A.3.1.3.6. Tier 2: Sec. 5.5.2.2.3)

C NC N/A U STRONG COLUMN—WEAK BEAM: The percentage of strong column–weak beam joints in each story of each line of moment-resisting frames is greater than 50%. (Commentary: Sec. A.3.1.3.7. Tier 2: Sec. 5.5.2.1.5)

C NC N/A U COMPACT MEMBERS: All frame elements meet section requirements set forth by AISC 341, Table D1.1, for highly ductile members. (Commentary: Sec. A.3.1.3.8. Tier 2: Sec. 5.5.2.2.4)

C NC N/A U BEAM PENETRATIONS: All openings in frame-beam webs are less than one quarter of the beam depth and are located in the center half of the beams. (Commentary: Sec. A.3.1.3.9. Tier 2: Sec. 5.5.2.2.5)

C NC N/A U GIRDER FLANGE CONTINUITY PLATES: There are girder flange continuity plates at all moment frame joints. (Commentary: Sec. A.3.1.3.10. Tier 2: Sec. 5.5.2.2.6)

C NC N/A U OUT-OF-PLANE BRACING: Beam–column joints are braced out-of-plane. (Commentary: Sec. A.3.1.3.11. Tier 2: Sec. 5.5.2.2.7)

C NC N/A U BOTTOM FLANGE BRACING: The bottom flanges of beams are braced out-of-plane. (Commentary: Sec. A.3.1.3.12. Tier 2: Sec. 5.5.2.2.8)

Diaphragms (Stiff or Flexible)

C NC N/A U PLAN IRREGULARITIES: There is tensile capacity to develop the strength of the diaphragm at reentrant corners or other locations of plan irregularities. (Commentary: Sec. A.4.1.7. Tier 2: Sec. 5.6.1.4)

C NC N/A U DIAPHRAGM REINFORCEMENT AT OPENINGS: There is reinforcing around all diaphragm openings larger than 50% of the building width in either major plan dimension. (Commentary: Sec. A.4.1.8. Tier 2: Sec. 5.6.1.5)

C NC N/A U OPENINGS AT FRAMES: Diaphragm openings immediately adjacent to the moment frames extend less than 15% of the total frame length. (Commentary: Sec. A.4.1.5. Tier 2: Sec. 5.6.1.3)

Flexible Diaphragms

C NC N/A U CROSS TIES: There are continuous cross ties between diaphragm chords. (Commentary: Sec. A.4.1.2. Tier 2: Sec. 5.6.1.2)

C NC N/A U STRAIGHT SHEATHING: All straight sheathed diaphragms have aspect ratios less than 1-to-1 in the direction being considered. (Commentary: Sec. A.4.2.1. Tier 2: Sec. 5.6.2)

C NC N/A U SPANS: All wood diaphragms with spans greater than 12 ft consist of wood structural panels or diagonal sheathing. (Commentary: Sec. A.4.2.2. Tier 2: Sec. 5.6.2)

C NC N/A U DIAGONALLY SHEATHED AND UNBLOCKED DIAPHRAGMS: All diagonally sheathed or unblocked wood structural panel diaphragms have horizontal spans less than 30 ft and aspect ratios less than or equal to 3-to-1. (Commentary: Sec. A.4.2.3. Tier 2: Sec. 5.6.2)

C NC N/A U NONCONCRETE FILLED DIAPHRAGMS: Untopped metal deck diaphragms or metal deck diaphragms with fill other than concrete consist of horizontal spans of less than 40 ft and have aspect ratios less than 4-to-1. (Commentary: Sec. A.4.3.1. Tier 2: Sec. 5.6.3)

C NC N/A U OTHER DIAPHRAGMS: The diaphragm does not consist of a system other than wood, metal deck, concrete, or horizontal bracing. (Commentary: Sec. A.4.7.1. Tier 2: Sec. 5.6.5)

High Seismicity: Complete theFollowing Items in Addition to the Items for Very Low, Low, and Moderate Seismicity.

Seismic-Force-Resisting System

C NC N/A U MOMENT-RESISTING CONNECTIONS: All moment connections are able to develop the strength of the adjoining members or panel zones based on 110% of the expected yield stress of the steel per AISC 341, Section A3.2. (Commentary: Sec. A.3.1.3.4. Tier 2: Sec. 5.5.2.2.1)

Foundation System

C NC N/A U DEEP FOUNDATIONS: Piles and piers are capable of transferring the seismic forces between the structure and the soil. (Commentary: Sec. A.6.2.3.)

C NC N/A U SLOPING SITES: The difference in foundation embedment depth from one side of the building to another does not exceed one story high. (Commentary: Sec. A.6.2.4)

Project: _____ Location: _____

Completed by: _____ Date: _____

16.5LS LIFE SAFETY STRUCTURAL CHECKLIST FOR BUILDING TYPES S2: STEEL BRACED FRAMES WITH STIFF DIAPHRAGMS AND S2A: STEEL BRACED FRAMES WITH FLEXIBLE DIAPHRAGMS

Low Seismicity

Seismic-Force-Resisting System

C NC N/A U COLUMN AXIAL STRESS CHECK: The axial stress caused by gravity loads in columns subjected to overturning forces is less than $0.10F_y$. Alternatively, the axial stress caused by overturning forces alone, calculated using the Quick Check procedure of Section 4.5.3.6, is less than $0.30F_y$. (Commentary: Sec. A.3.1.3.2. Tier 2: Sec. 5.5.2.1.3)

C NC N/A U BRACE AXIAL STRESS CHECK: The axial stress in the diagonals, calculated using the Quick Check procedure of Section 4.5.3.4, is less than $0.50F_y$. (Commentary: Sec. A.3.3.1.2. Tier 2: Sec. 5.5.4.1)

Connections

C NC N/A U TRANSFER TO STEEL FRAMES: Diaphragms are connected for transfer of seismic forces to the steel frames. (Commentary: Sec. A.5.2.2. Tier 2: Sec. 5.7.2)

C NC N/A U STEEL COLUMNS: The columns in seismic-force-resisting frames are anchored to the building foundation. (Commentary: Sec. A.5.3.1. Tier 2: Sec. 5.7.3.1)

Moderate Seismicity: Complete the Following Items in Addition to the Items for Low Seismicity.

Seismic-Force-Resisting System

C NC N/A U REDUNDANCY: The number of lines of braced frames in each principal direction is greater than or equal to 2. The number of braced bays in each line is greater than 2. (Commentary: Sec. A.3.3.1.1. Tier 2: Sec. 5.5.1.1)

C NC N/A U CONNECTION STRENGTH: All the brace connections develop the buckling capacity of the diagonals. (Commentary: Sec. A.3.3.1.5. Tier 2: Sec. 5.5.4.4)

C NC N/A U COMPACT MEMBERS: All brace elements meet compact section requirements set forth by AISC 360, Table B4.1. (Commentary: Sec. A.3.3.1.7. Tier 2: Sec. 5.5.4)

C NC N/A U K-BRACING: The bracing system does not include K-braced bays. (Commentary: Sec. A.3.3.2.1. Tier 2: Sec. 5.5.4.6)

High Seismicity: Complete the Following Items in Addition to the Items for Low and Moderate Seismicity.

Seismic-Force-Resisting System

C NC N/A U COLUMN SPLICES: All column splice details located in braced frames develop 50% of the tensile strength of the column. (Commentary: Sec. A.3.3.1.3. Tier 2: Sec. 5.5.4.2)

C NC N/A U SLENDERNESS OF DIAGONALS: All diagonal elements required to carry compression have Kl/r ratios less than 200. (Commentary: Sec. A.3.3.1.4. Tier 2: Sec. 5.5.4.3)

C NC N/A U CONNECTION STRENGTH: All the brace connections develop the yield capacity of the diagonals. (Commentary: Sec. A.3.3.1.5. Tier 2: Sec. 5.5.4.4)

C NC N/A U COMPACT MEMBERS: All brace elements meet section requirements set forth by AISC 341, Table D1.1, for moderately ductile members. (Commentary: Sec. A.3.3.1.7. Tier 2: Sec. 5.5.4)

C NC N/A U CHEVRON BRACING: Beams in chevron, or V-braced, bays are capable of resisting the vertical load resulting from the simultaneous yielding and buckling of the brace pairs. (Commentary: Sec. A.3.3.2.3. Tier 2: Sec. 5.5.4.6)

C NC N/A U CONCENTRICALLY BRACED FRAME JOINTS: All the diagonal braces shall frame into the beam–column joints concentrically. (Commentary: Sec. A.3.3.2.4. Tier 2: Sec. 5.5.4.8)

Diaphragms (Stiff or Flexible)

C NC N/A U OPENINGS AT FRAMES: Diaphragm openings immediately adjacent to the braced frames extend less than 25% of the frame length. (Commentary: Sec. A.4.1.5. Tier 2: Sec. 5.6.1.3)

Flexible Diaphragms

C NC N/A U CROSS TIES: There are continuous cross ties between diaphragm chords. (Commentary: Sec. A.4.1.2. Tier 2: Sec. 5.6.1.2)

C NC N/A U STRAIGHT SHEATHING: All straight sheathed diaphragms have aspect ratios less than 2-to-1 in the direction being considered. (Commentary: Sec. A.4.2.1. Tier 2: Sec. 5.6.2)

C NC N/A U SPANS: All wood diaphragms with spans greater than 24 ft consist of wood structural panels or diagonal sheathing. (Commentary: Sec. A.4.2.2. Tier 2: Sec. 5.6.2)

C NC N/A U DIAGONALLY SHEATHED AND UNBLOCKED DIAPHRAGMS: All diagonally sheathed or unblocked wood structural panel diaphragms have horizontal spans less than 40 ft and aspect ratios less than or equal to 4-to-1. (Commentary: Sec. A.4.2.3. Tier 2: Sec. 5.6.2)

C NC N/A U OTHER DIAPHRAGMS: The diaphragm does not consist of a system other than wood, metal deck, concrete, or horizontal bracing. (Commentary: Sec. A.4.7.1. Tier 2: Sec. 5.6.5)

Project: _____ Location: _____

Completed by: _____ Date: _____

16.5IO IMMEDIATE OCCUPANCY STRUCTURAL CHECKLIST FOR BUILDING TYPES S2: STEEL BRACED FRAMES AND S2A: STEEL BRACED FRAMES WITH FLEXIBLE DIAPHRAGMS

Very Low Seismicity

Seismic-Force-Resisting System

C NC N/A U COLUMN AXIAL STRESS CHECK: The axial stress caused by gravity loads in columns subjected to overturning forces is less than $0.10F_y$. Alternatively, the axial stress caused by overturning forces alone, calculated using the Quick Check procedure of Section 4.5.3.6, is less than $0.30F_y$. (Commentary: Sec. A.3.1.3.2. Tier 2: Sec. 5.5.2.1.3)

C NC N/A U BRACE AXIAL STRESS CHECK: The axial stress in the diagonals, calculated using the Quick Check procedure of Section 4.5.3.4, is less than $0.50F_y$. (Commentary: Sec. A.3.3.1.2. Tier 2: Sec. 5.5.4.1)

Connections

C NC N/A U STEEL COLUMNS: The columns in seismic-force-resisting frames are anchored to the building foundation. (Commentary: Sec. A.5.3.1. Tier 2: Sec. 5.7.3.1)

Low Seismicity: Complete the Following Items in Addition to the Items for Very Low Seismicity.

Connections

C NC N/A U TRANSFER TO STEEL FRAMES: Diaphragms are connected for transfer of seismic forces to the steel frames, and the connections are able to develop the lesser of the strength of the frames or the diaphragms. (Commentary: Sec. A.5.2.2. Tier 2: Sec. 5.7.2)

Moderate Seismicity: Complete the Following Items in Addition to the Items for Very Low and Low Seismicity.

Seismic-Force-Resisting System

C NC N/A U REDUNDANCY: The number of lines of braced frames in each principal direction is greater than or equal to 2. The number of braced bays in each line is greater than 3. (Commentary: Sec. A.3.1.1.1. Tier 2: Sec. 5.5.1.1)

C NC N/A U COLUMN SPLICES: All column splice details located in braced frames develop 100% of the tensile strength of the column. (Commentary: Sec. A.3.3.1.3. Tier 2: Sec. 5.5.4.2)

C NC N/A U SLENDERNESS OF DIAGONALS: All diagonal elements required to carry compression shall have Kl/r ratios less than 200. (Commentary: Sec. A.3.3.1.4. Tier 2: Sec. 5.5.4.3)

C NC N/A U CONNECTION STRENGTH: All the brace connections develop the buckling capacity of the diagonals. (Commentary: Sec. A.3.3.1.5. Tier 2: Sec. 5.5.4.4)

C NC N/A U OUT-OF-PLANE BRACING: Braced frame connections attached to beam bottom flanges located away from beam–column joints are braced out-of-plane at the bottom flange of the beams. (Commentary: Sec. A.3.3.1.6. Tier 2: Sec. 5.5.4.5)

C NC N/A U COMPACT MEMBERS: All brace elements meet compact section requirements set forth by AISC 341, Table B4.1. (Commentary: Sec. A.3.3.1.7. Tier 2: Sec. 5.5.4)

C NC N/A U K-BRACING: The bracing system does not include K-braced bays. (Commentary: Sec. A.3.3.2.1. Tier 2: Sec. 5.5.4.6)

C NC N/A U TENSION-ONLY BRACES: Tension-only braces do not comprise more than 70% of the total seismic-force-resisting capacity in structures more than two stories high. (Commentary: Sec. A.3.3.2.2. Tier 2: Sec. 5.5.4.7)

C NC N/A U CHEVRON BRACING: Beams in chevron, or V-braced, bays are capable of resisting the vertical load resulting from the simultaneous yielding and buckling of the brace pairs. (Commentary: Sec. A.3.3.2.3.Tier 2: Sec. 5.5.4.6)

C NC N/A U CONCENTRICALLY BRACED FRAME JOINTS: All the diagonal braces frame into the beam–column joints concentrically. (Commentary: Sec. A.3.3.2.4. Tier 2: Sec. 5.5.4.8)

Diaphragms (Stiff or Flexible)

C NC N/A U OPENINGS AT FRAMES: Diaphragm openings immediately adjacent to the braced frames extend less than 15% of the frame length. (Commentary: Sec. A.4.1.5. Tier 2: Sec. 5.6.1.3)

C NC N/A U PLAN IRREGULARITIES: There is tensile capacity to develop the strength of the diaphragm at reentrant corners or other locations of plan irregularities. (Commentary: Sec. A.4.1.7. Tier 2: Sec. 5.6.1.4)

C NC N/A U DIAPHRAGM REINFORCEMENT AT OPENINGS: There is reinforcing around all diaphragm openings larger than 50% of the building width in either major plan dimension. (Commentary: Sec. A.4.1.8. Tier 2: Sec. 5.6.1.5)

Flexible Diaphragms

C NC N/A U CROSS TIES: There are continuous cross ties between diaphragm chords. (Commentary: Sec. A.4.1.2. Tier 2: Sec. 5.6.1.2)

C NC N/A U STRAIGHT SHEATHING: All straight sheathed diaphragms have aspect ratios less than 1-to-1 in the direction being considered. (Commentary: Sec. A.4.2.1. Tier 2: Sec. 5.6.2)

C NC N/A U SPANS: All wood diaphragms with spans greater than 12 ft consist of wood structural panels or diagonal sheathing. (Commentary: Sec. A.4.2.2. Tier 2: Sec. 5.6.2)

C NC N/A U DIAGONALLY SHEATHED AND UNBLOCKED DIAPHRAGMS: All diagonally sheathed or unblocked wood structural panel diaphragms have horizontal spans less than 30 ft and aspect ratios less than or equal to 3-to-1. (Commentary: Sec. A.4.2.3. Tier 2: Sec. 5.6.2)

C NC N/A U NONCONCRETE FILLED DIAPHRAGMS: Untopped metal deck diaphragms or metal deck diaphragms with fill other than concrete consist of horizontal spans of less than 40 ft and have aspect ratios less than 4-to-1. (Commentary: Sec. A.4.3.1. Tier 2: Sec. 5.6.3)

C NC N/A U OTHER DIAPHRAGMS: The diaphragm does not consist of a system other than wood, metal deck, concrete, or horizontal bracing. (Commentary: Sec. A.4.7.1. Tier 2: Sec. 5.6.5)

High Seismicity: Complete the Following Items in Addition to the Items for Very Low, Low, and Moderate Seismicity.

Seismic-Force-Resisting System

C NC N/A U CONNECTION STRENGTH: All the brace connections develop the yield capacity of the diagonals. (Commentary: Sec. A.3.3.1.5. Tier 2: Sec. 5.5.4.4)

C NC N/A U COMPACT MEMBERS: All column and brace elements meet section requirements set forth by AISC 341, Table D1.1, for highly ductile members. Braced frame beams meet the requirements for moderately ductile members. (Commentary: Sec. A.3.3.1.7. Tier 2: Sec. 5.5.4)

C NC N/A U NET AREA: The brace effective net area is not less than the brace gross area for hollow structural section (HSS) tube and pipes sections. (Commentary: Sec. A.3.3.1.8. Tier 2: Sec. 5.5.4.1)

Connections

C NC N/A U STEEL COLUMNS: The columns in seismic-force-resisting frames are anchored to the building foundation, and the anchorage is able to develop the least of the tensile capacity of the column, the tensile capacity of the lowest level column splice (if any), or the uplift capacity of the foundation. (Commentary: Sec. A.5.3.1. Tier 2: Sec. 5.7.3.1)

Foundation System

C NC N/A U DEEP FOUNDATIONS: Piles and piers are capable of transferring the seismic forces between the structure and the soil. (Commentary: Sec. A.6.2.3.)

C NC N/A U SLOPING SITES: The difference in foundation embedment depth from one side of the building to another does not exceed one story high. (Commentary: Sec. A.6.2.4)

Project: _____ Location: _____

Completed by: _____ Date: _____

16.6LS LIFE SAFETY STRUCTURAL CHECKLIST FOR BUILDING TYPE S3: STEEL LIGHT FRAMES

Low and Moderate Seismicity

Seismic-Force-Resisting System

C NC N/A U BRACE AXIAL STRESS CHECK: The axial stress in the diagonals, calculated using the Quick Check procedure of Section 4.5.3.4, is less than $0.50F_y$. (Commentary: Sec. A.3.3.1.2. Tier 2: Sec. 5.5.4.1)

Connections

C NC N/A U TRANSFER TO STEEL FRAMES: Diaphragms are connected for transfer of seismic forces to the steel frames. (Commentary: Sec. A.5.2.2. Tier 2: Sec. 5.7.2)

C NC N/A U STEEL COLUMNS: The columns in seismic-force-resisting frames are anchored to the building foundation. (Commentary: Sec. A.5.3.1. Tier 2: Sec. 5.7.3.1)

High Seismicity: Complete the Following Items in Addition to the Items for Low and Moderate Seismicity.

Seismic-Force-Resisting System

C NC N/A U MOMENT-RESISTING CONNECTIONS: All moment connections are able to develop the elastic moment (F_yS) of the adjoining members. (Commentary: Sec. A.3.1.3.4. Tier 2: Sec. 5.5.2.2.1)

C NC N/A U COMPACT MEMBERS: All frame elements shall meet compact section requirements set forth by AISC 360, Table B4.1. (Commentary: Sec. A.3.1.3.8. Tier 2: Sec. 5.5.2.2.4)

C NC N/A U OTHER DIAPHRAGMS: The diaphragm does not consist of a system other than wood, metal deck, concrete, or horizontal bracing. (Commentary: Sec. A.4.7.1. Tier 2: Sec. 5.6.5)

Connections

C NC N/A U ROOF PANELS: Metal, plastic, or cementitious roof panels are positively attached to the roof framing to resist seismic forces. (Commentary: Sec. A.5.5.1. Tier 2: Sec. 5.7.5)

C NC N/A U WALL PANELS: Metal, fiberglass, or cementitious wall panels are positively attached to the framing and foundation to resist seismic forces. (Commentary: Sec. A.5.5.2. Tier 2: Sec. 5.7.5)

Project: _____ Location: _____

Completed by: _____ Date: _____

16.6IO IMMEDIATE OCCUPANCY STRUCTURAL CHECKLIST FOR BUILDING TYPE S3: STEEL LIGHT FRAMES

Very Low and Low Seismicity

Seismic-Force-Resisting System

C NC N/A U BRACE AXIAL STRESS CHECK: The axial stress in the diagonals, calculated using the Quick Check procedure of Section 4.5.3.4, is less than $0.50F_y$. (Commentary: Sec. A.3.3.1.2. Tier 2: Sec. 5.5.4.1)

C NC N/A U FLEXURAL STRESS CHECK: The average flexural stress in the moment frame columns and beams, calculated using the Quick Check procedure of Section 4.5.3.9, is less than F_y. (Commentary: Sec. A.3.1.3.3. Tier 2: Sec. 5.5.2.1.2)

Connections

C NC N/A U TRANSFER TO STEEL FRAMES: Diaphragms are connected for transfer of seismic forces to the steel frames. (Commentary: Sec. A.5.2.2. Tier 2: Sec. 5.7.2)

C NC N/A U STEEL COLUMNS: The columns in seismic-force-resisting frames are anchored to the building foundation. (Commentary: Sec. A.5.3.1. Tier 2: Sec. 5.7.3.1)

Moderate Seismicity: Complete the Following Items in Addition to the Items for Very Low and Low Seismicity.

Seismic-Force-Resisting System

C NC N/A U MOMENT-RESISTING CONNECTIONS: All moment connections are able to develop the elastic moment (F_yS) of the adjoining members. (Commentary: Sec. A.3.1.3.4. Tier 2: Sec. 5.5.2.2.1)

Connections

C NC N/A U ROOF PANELS: Metal, plastic, or cementitious roof panels are positively attached to the roof framing to resist seismic forces. (Commentary: Sec. A.5.5.1. Tier 2: Sec. 5.7.5)

C NC N/A U WALL PANELS: Metal, fiberglass, or cementitious wall panels are positively attached to the framing and foundation to resist seismic forces. (Commentary: Sec. A.5.5.2. Tier 2: Sec. 5.7.5)

Diaphragms

C NC N/A U PLAN IRREGULARITIES: There is tensile capacity to develop the strength of the diaphragm at reentrant corners or other locations of plan irregularities. (Commentary: Sec. A.4.1.7. Tier 2: Sec. 5.6.1.4)

C NC N/A U DIAPHRAGM REINFORCEMENT AT OPENINGS: There is reinforcing around all diaphragm openings larger than 50% of the building width in either major plan dimension. (Commentary: Sec. A.4.1.8. Tier 2: Sec. 5.6.1.5)

C NC N/A U OTHER DIAPHRAGMS: The diaphragm does not consist of a system other than wood, metal deck, concrete, or horizontal bracing. (Commentary: Sec. A.4.7.1. Tier 2: Sec. 5.6.5)

High Seismicity: Complete the Following Items in Addition to the Items for Very Low, Low, and Moderate Seismicity.

Seismic-Force-Resisting System

C NC N/A U MOMENT-RESISTING CONNECTIONS: All moment connections are able to develop the strength of the adjoining members or panel zones. (Commentary: Sec. A.3.1.3.4. Tier 2:Sec. 5.5.2.2.1)

C NC N/A U COMPACT MEMBERS: All frame elements meet compact section requirements set forth by AISC 360, Table B4.1. (Commentary: Sec. A.3.1.3.8. Tier 2: Sec. 5.5.2.2.4)

C NC N/A U BEAM PENETRATIONS: All openings in frame-beam webs are less than one quarter of the beam depth and are located in the center half of the beams. (Commentary: Sec. A.3.1.3.9. Tier 2:Sec. 5.5.2.2.5)

C NC N/A U OUT-OF-PLANE BRACING: Beam–column joints are braced out-of-plane. (Commentary: Sec. A.3.1.3.11. Tier 2: Sec. 5.5.2.2.7)

C NC N/A U BOTTOM FLANGE BRACING: The bottom flanges of beams are braced out-of-plane. (Commentary: Sec. A.3.1.3.12. Tier 2: Sec. 5.5.2.2.8)

Connections

C NC N/A U TRANSFER TO STEEL FRAMES: Diaphragms are connected for transfer of seismic forces to the steel frames, and the connections are able to develop the lesser of the strength of the frames or the diaphragms. (Commentary: Sec. A.5.2.2. Tier 2: Sec. 5.7.2)

C NC N/A U STEEL COLUMNS: The columns in seismic-force-resisting frames are anchored to the building foundation, and the anchorage is able to develop the least of the tensile capacity of the column, the tensile capacity of the lowest level column splice (if any), or the uplift capacity of the foundation. (Commentary: Sec. A.5.3.1. Tier 2: Sec. 5.7.3.1)

Foundation System

C NC N/A U DEEP FOUNDATIONS: Piles and piers are capable of transferring the seismic forces between the structure and the soil. (Commentary: Sec. A.6.2.3.)

C NC N/A U SLOPING SITES: The difference in foundation embedment depth from one side of the building to another shall not exceed one story high. (Commentary: Sec. A.6.2.4)

Project: _____ Location: _____

Completed by: _____ Date: _____

16.7LS LIFE SAFETY STRUCTURAL CHECKLIST FOR BUILDING TYPE S4: DUAL SYSTEMS WITH BACKUP STEEL MOMENT FRAMES AND STIFF DIAPHRAGMS

Low Seismicity

Seismic-Force-Resisting System

C NC N/A U DRIFT CHECK: The drift ratio of the steel moment frames acting alone, calculated using the Quick Check procedure of Section 4.5.3.1 using 25% of V_c, is less than 0.025. (Commentary: Sec. A.3.1.3.1. Tier 2: Sec. 5.5.2.1.2)

C NC N/A U COLUMN AXIAL STRESS CHECK: The axial stress caused by gravity loads in frame columns subjected to overturning forces is less than $0.10F_y$. Alternatively, the axial stress caused by overturning forces alone, calculated using the Quick Check procedure of Section 4.5.3.6, is less than $0.30F_y$. (Commentary: Sec. A.3.1.3.2. Tier 2: Sec. 5.5.2.1.3)

C NC N/A U BRACE AXIAL STRESS CHECK: The axial stress in the diagonal braces, calculated using the Quick Check procedure of Section 4.5.3.4 and neglecting the steel moment frame, is less than $0.50F_y$. (Commentary: Sec. A.3.3.1.2. Tier 2: Sec. 5.5.4.1)

C NC N/A U COMPLETE FRAMES: Steel frames classified as secondary components form a complete vertical-load-carrying system. (Commentary: Sec. A.3.1.6.1. Tier 2: Sec. 5.5.2.5.1)

C NC N/A U SHEAR STRESS CHECK: The shear stress in the concrete shear walls, calculated using the Quick Check procedure of Section 4.5.3.3 and neglecting the steel moment frame, is less than the greater of 100 lb/in.^{2} or $2\sqrt{f'_c}$. (Commentary: Sec. A.3.2.2.1. Tier 2: Sec. 5.5.3.1.1)

C NC N/A U REINFORCING STEEL: The ratio of reinforcing steel area to gross concrete area is not less than 0.0012 in the vertical direction and 0.0020 in the horizontal direction. (Commentary: Sec. A.3.2.2.2. Tier 2: Sec. 5.5.3.1.3)

Connections

C NC N/A U STEEL COLUMNS: The columns in seismic-force-resisting frames are anchored to the building foundation. (Commentary: Sec. A.5.3.1. Tier 2: Sec. 5.7.3.1)

C NC N/A U TRANSFER TO SHEAR WALLS: Diaphragms are connected for transfer of seismic forces to the shear walls. (Commentary: Sec. A.5.2.1. Tier 2: Sec. 5.7.2)

C NC N/A U TRANSFER TO STEEL FRAMES: Diaphragms are connected for transfer of seismic forces to the steel frames. (Commentary: Sec. A.5.2.2. Tier 2: Sec. 5.7.2)

C NC N/A U FOUNDATION DOWELS: Wall reinforcement is doweled into the foundation. (Commentary: Sec. A.5.3.5. Tier 2: Sec. 5.7.3.4)

Moderate Seismicity: Complete the Following Items in Addition to the Items for Low Seismicity.

Seismic-Force-Resisting System

C NC N/A U REDUNDANCY: The number of lines of braced frames or shear walls in each principal direction is greater than or equal to 2. For braced frames, the number of braced bays in each line is greater than 2. (Commentary: Sec. A.3.2.1.1, and Sec. A.3.3.1.1. Tier 2: Sec. 5.5.1.1)

C NC N/A U MOMENT-RESISTING CONNECTIONS: All moment connections are able to develop the strength of the adjoining members based on the specified minimum yield stress of the steel. (Commentary: Sec. A.3.1.3.4. Tier 2: Sec. 5.5.2.2.1). Note: more restrictive requirements for High Seismicity.

C NC N/A U COMPACT MEMBERS: All moment frame and brace elements meet section requirements set forth by AISC 360, Table B4.1. (Commentary: Sec. A.3.1.3.7 and A.3.1.3.8. Tier 2: Sec. 5.5.2.2.4 and 5.5.4)

C NC N/A U CONNECTION STRENGTH: All the brace connections develop the buckling capacity of the diagonals. (Commentary: Sec. A.3.3.1.5. Tier 2: Sec. 5.5.4.4)

C NC N/A U K-BRACING: The bracing system does not include K-braced bays. (Commentary: Sec. A.3.3.2.1. Tier 2: Sec. 5.5.4.6)

High Seismicity: Complete the Following Items in Addition to the Items for Low and Moderate Seismicity.

Seismic-Force-Resisting System

C NC N/A U MOMENT-RESISTING CONNECTIONS: All moment connections are able to develop the strength of the adjoining members or panel zones based on 110% of the expected yield stress of the steel per AISC 341, Section A3.2. (Commentary: Sec. A.3.1.3.4. Tier 2: Sec. 5.5.2.2.1)

C NC N/A U COLUMN SPLICES: All column splice details located in moment frames include connection of both flanges and the web. (Commentary: Sec. A.3.1.3.6. Tier 2: Sec. 5.5.2.2.3)

C NC N/A U STRONG COLUMN/WEAK BEAM: The percentage of strong column–weak beam joints in each story of each line of moment frames is greater than 50%. (Commentary: Sec. A.3.1.3.7. Tier 2: Sec. 5.5.2.1.5)

C NC N/A U COMPACT MEMBERS: All moment frame and brace elements meet section requirements set forth by AISC 341, Table D1.1 for moderately ductile members. (Commentary: Sec. A.3.1.3.7 and A.3.1.3.8. Tier 2: Sec. 5.5.2.2.4 and 5.5.4)

C NC N/A U COLUMN SPLICES: All column splice details located in braced frames develop 50% of the tensile strength of the column. (Commentary: Sec. A.3.3.1.3. Tier 2: Sec. 5.5.4.2)

C NC N/A U SLENDERNESS OF DIAGONALS: All diagonal elements required to carry compression have Kl/r ratios less than 200. (Commentary: Sec. A.3.3.1.4. Tier 2: Sec. 5.5.4.3)

C NC N/A U CONNECTION STRENGTH: All the brace connections develop the yield capacity of the diagonals. (Commentary: Sec. A.3.3.1.5. Tier 2: Sec. 5.5.4.4)

C NC N/A U CHEVRON BRACING: Beams in chevron, or V-braced, bays are capable of resisting the vertical load resulting from the simultaneous yielding and buckling of the brace pairs. (Commentary: Sec. A.3.3.2.3. Tier 2: Sec. 5.5.4.6)

C NC N/A U CONCENTRICALLY BRACED FRAME JOINTS: All the diagonal braces frame into the beam–column joints concentrically. (Commentary: Sec. A.3.3.2.4. Tier 2: Sec. 5.5.4.8)

C NC N/A U COUPLING BEAMS: The stirrups in coupling beams over means of egress are spaced at or less than $d/2$ and are anchored into the confined core of the beam with hooks of 135 degrees or more. (Commentary: Sec. A.3.2.2.3. Tier 2: Sec. 5.5.3.2.1)

Diaphragms

C NC N/A U DIAPHRAGM CONTINUITY: The diaphragms are not composed of split-level floors and do not have expansion joints. (Commentary: Sec. A.4.1.1. Tier 2: Sec. 5.6.1.1)

C NC N/A U OPENINGS AT SHEAR WALLS: Diaphragm openings immediately adjacent to the shear walls are less than 15% of the wall length. (Commentary: Sec. A.4.1.4. Tier 2: Sec. 5.6.1.3)

C NC N/A U OPENINGS AT FRAMES: Diaphragm openings immediately adjacent to the braced frames or moment frames extend less than 25% of the frame length. (Commentary: Sec. A.4.1.5. Tier 2: Sec. 5.6.1.3)

Project: _____ Location: _____

Completed by: _____ Date: _____

16.7IO IMMEDIATE OCCUPANCY STRUCTURAL CHECKLIST FOR BUILDING TYPE S4: DUAL SYSTEMS WITH BACKUP STEEL MOMENT FRAMES AND STIFF DIAPHRAGMS

Very Low Seismicity

Seismic-Force-Resisting System

C NC N/A U COLUMN AXIAL STRESS CHECK: The axial stress caused by gravity loads in frame columns subjected to overturning forces is less than $0.10F_y$. Alternatively, the axial stress caused by overturning forces alone, calculated using the Quick Check procedure of Section 4.5.3.6, is less than $0.30F_y$. (Commentary: Sec. A.3.1.3.2. Tier 2: Sec. 5.5.2.1.3)

C NC N/A U BRACE AXIAL STRESS CHECK: The axial stress in the diagonal braces, calculated using the Quick Check procedure of Section 4.5.3.4 and neglecting the steel moment frame, is less than $0.50F_y$. (Commentary: Sec. A.3.3.1.2. Tier 2: Sec. 5.5.4.1)

C NC N/A U COMPLETE FRAMES: Steel frames classified as secondary components form a complete vertical-load-carrying system. (Commentary: Sec. A.3.1.6.1. Tier 2: Sec. 5.5.2.5.1)

C NC N/A U SHEAR STRESS CHECK: The shear stress in the concrete shear walls, calculated using the Quick Check procedure of Section 4.5.3.3 and neglecting the steel moment frame, is less than the greater of 100 lb/in.^{2} or $2\sqrt{f'_c}$. (Commentary: Sec. A.3.2.2.1. Tier 2: Sec. 5.5.3.1.1)

C NC N/A U REINFORCING STEEL: The ratio of shear wall reinforcing steel area to gross concrete area is not less than 0.0012 in the vertical direction and 0.0020 in the horizontal direction. The spacing of reinforcing steel is equal to or less than 18 in. (Commentary: Sec. A.3.2.2.2. Tier 2: Sec. 5.5.3.1.3)

Connections

C NC N/A U STEEL COLUMNS: The columns in seismic-force-resisting frames are anchored to the building foundation. (Commentary: Sec. A.5.3.1. Tier 2: Sec. 5.7.3.1)

C NC N/A U TRANSFER TO SHEAR WALLS: Diaphragms are connected for transfer of seismic forces to the shear walls. (Commentary: Sec. A.5.2.1. Tier 2: Sec. 5.7.2)

C NC N/A U FOUNDATION DOWELS: Wall reinforcement is doweled into the foundation and the dowels are able to develop the lesser of the strength of the walls or the uplift capacity of the foundation. (Commentary: Sec. A.5.3.5. Tier 2: Sec. 5.7.3.4)

Low Seismicity: Complete the Following Items in Addition to the Items for Very Low Seismicity.

Seismic-Force-Resisting System

C NC N/A U DRIFT CHECK: The drift ratio of the steel moment frames acting alone, calculated using the Quick Check procedure of Section 4.5.3.1 using 25% of V_c, is less than 0.015. (Commentary: Sec. A.3.1.3.1. Tier 2: Sec. 5.5.2.1.2)

C NC N/A U REDUNDANCY: The number of lines of braced frames or shear walls in each principal direction is greater than or equal to 2. The number of braced bays in each line is greater than 3. (Commentary: Sec. A.3.2.1.1 and Sec. A.3.1.1.1. Tier 2: Sec. 5.5.1.1)

C NC N/A U INTERFERING WALLS: All concrete and masonry infill walls placed in moment frames are isolated from structural elements. (Commentary: Sec. A.3.1.2.1. Tier 2: Sec. 5.5.2.1.1)

Connections

C NC N/A U TRANSFER TO STEEL FRAMES: Diaphragms are connected for transfer of seismic forces to the steel frames, and the connections are able to develop the lesser of the strength of the frames or the diaphragms. (Commentary: Sec. A.5.2.2. Tier 2: Sec. 5.7.2)

Moderate Seismicity: Complete the Following Items in Addition to the Items for Very Low and Low Seismicity.

Seismic-Force-Resisting System

C NC N/A U MOMENT-RESISTING CONNECTIONS: All moment connections are able to develop the strength of the adjoining members based on the specified minimum yield stress of the steel. (Commentary: Sec. A.3.1.3.4. Tier 2: Sec. 5.5.2.2.1). Note: more restrictive requirements for High Seismicity.

C NC N/A U PANEL ZONES: All panel zones have the shear capacity to resist the shear demand required to develop 0.8 times the sum of the flexural strengths of the girders framing in at the face of the column. (Commentary: Sec. A.3.1.3.5. Tier 2: Sec. 5.5.2.2.2)

C NC N/A U COLUMN SPLICES: All column splice details located in moment frames include connection of both flanges and the web, and the splice develops the strength of the column. (Commentary: Sec. A.3.1.3.6. Tier 2: Sec. 5.5.2.2.3)

C NC N/A U STRONG COLUMN/WEAK BEAM: The percentage of strong column–weak beam joints in each story of each line of moment frames is greater than 50%. (Commentary: Sec. A.3.1.3.7. Tier 2: Sec. 5.5.2.1.5)

C NC N/A U BEAM PENETRATIONS: All openings in frame-beam webs are less than one quarter of the beam depth and are located in the center half of the beams. (Commentary: Sec. A.3.1.3.9. Tier 2: Sec. 5.5.2.2.5)

C NC N/A U GIRDER FLANGE CONTINUITY PLATES: There are girder flange continuity plates at all moment-resisting frame joints. (Commentary: Sec. A.3.1.3.10. Tier 2: Sec. 5.5.2.2.6)

C NC N/A U OUT-OF-PLANE BRACING: Beam–column joints are braced out-of-plane. (Commentary: Sec. A.3.1.3.11. Tier 2: Sec. 5.5.2.2.7)

C NC N/A U BOTTOM FLANGE BRACING: The bottom flanges of beams are braced out of plane. (Commentary: Sec. A.3.1.3.12. Tier 2: Sec. 5.5.2.2.8)

C NC N/A U COMPACT MEMBERS: All brace elements meet section requirements set forth by AISC 360, Table B4.1. (Commentary: Sec. A.3.3.1.7. Tier 2: Sec. 5.5.4)

C NC N/A U COLUMN SPLICES: All column splice details located in braced frames develop 100% of the tensile strength of the column. (Commentary: Sec. A.3.3.1.3. Tier 2: Sec. 5.5.4.2)

C NC N/A U SLENDERNESS OF DIAGONALS: All diagonal elements required to carry compression have Kl/r ratios less than 200. (Commentary: Sec. A.3.3.1.4. Tier 2: Sec. 5.5.4.3)

C NC N/A U CONNECTION STRENGTH: All the brace connections develop the buckling capacity of the diagonals. (Commentary: Sec. A.3.3.1.5. Tier 2: Sec. 5.5.4.4)

C NC N/A U OUT-OF-PLANE BRACING: Braced frame connections attached to beam bottom flanges located away from beam–column joints are braced out-of-plane at the bottom flange of the beams. (Commentary: Sec. A.3.3.1.6. Tier 2: Sec. 5.5.4.5)

C NC N/A U K-BRACING: The bracing system does not include K-braced bays. (Commentary: Sec. A.3.3.2.1. Tier 2: Sec. 5.5.4.6)

C NC N/A U TENSION-ONLY BRACES: Tension-only braces do not comprise more than 70% of the total seismic-force-resisting capacity in structures more than two stories high. (Commentary: Sec. A.3.3.2.2. Tier 2: Sec. 5.5.4.7)

C NC N/A U CHEVRON BRACING: Beams in chevron, or V-braced, bays are capable of resisting the vertical load resulting from the simultaneous yielding and buckling of the brace pairs. (Commentary: Sec. A.3.3.2.3. Tier 2: Sec. 5.5.4.6)

C NC N/A U CONCENTRICALLY BRACED FRAME JOINTS: All the diagonal braces frame into the beam–column joints concentrically. (Commentary: Sec. A.3.3.2.4. Tier 2: Sec. 5.5.4.8)

C NC N/A U COUPLING BEAMS: The stirrups in coupling beams over means of egress are spaced at or less than $d/2$ and are anchored into the confined core of the beam with hooks of 135 degrees or more. All coupling beams shall comply with the requirements above and shall have the capacity in shear to develop the uplift capacity of the adjacent wall. (Commentary: Sec. A3.2.2.3. Tier 2: Sec. 5.5.3.2.1)

C NC N/A U OVERTURNING: All shear walls have aspect ratios less than 4-to-1. Wall piers need not be considered. (Commentary: Sec. A.3.2.2.4. Tier 2: Sec. 5.5.3.1.4)

C NC N/A U CONFINEMENT REINFORCING: For shear walls with aspect ratios greater than 2-to-1, the boundary elements are confined with spirals or ties with spacing less than $8d_b$. (Commentary: Sec. A.3.2.2.5. Tier 2: Sec. 5.5.3.2.2)

C NC N/A U WALL REINFORCING AT OPENINGS: There is added trim reinforcement around all wall openings with a dimension greater than three times the thickness of the wall. (Commentary: Sec. A.3.2.2.6. Tier 2: Sec. 5.5.3.1.5)

C NC N/A U WALL THICKNESS: Thicknesses of bearing walls is not less than 1/25 the unsupported height or length, whichever is shorter, nor less than 4 in. (Commentary: Sec. A.3.2.2.7. Tier 2: Sec. 5.5.3.1.2)

Diaphragms

C NC N/A U OPENINGS AT SHEAR WALLS: Diaphragm openings immediately adjacent to the shear walls are less than 15% of the wall length. (Commentary: Sec. A.4.1.4. Tier 2: Sec. 5.6.1.3)

C NC N/A U OPENINGS AT FRAMES: Diaphragm openings immediately adjacent to the braced frames or moment frames extend less than 15% of the frame length. (Commentary: Sec. A.4.1.5. Tier 2: Sec. 5.6.1.3)

C NC N/A U PLAN IRREGULARITIES: There is tensile capacity to develop the strength of the diaphragm at reentrant corners or other locations of plan irregularities. (Commentary: Sec. A.4.1.7. Tier 2: Sec. 5.6.1.4)

C NC N/A U DIAPHRAGM REINFORCEMENT AT OPENINGS: There is reinforcing around all diaphragm openings larger than 50% of the building width in either major plan dimension. (Commentary: Sec. A.4.1.8. Tier 2: Sec. 5.6.1.5)

C NC N/A U DIAPHRAGM CONTINUITY: The diaphragms are not composed of split-level floors and do not have expansion joints. (Commentary: Sec. A.4.1.1. Tier 2: Sec. 5.6.1.1)

High Seismicity: Complete the Following Items in Addition to the Items for Very Low, Low, and Moderate Seismicity.

Seismic-Force-Resisting System

C NC N/A U MOMENT-RESISTING CONNECTIONS: All moment connections are able to develop the strength of the adjoining members or panel zones based on 110% of the expected yield stress of the steel per AISC 341, Section A3.2. (Commentary: Sec. A.3.1.3.4. Tier 2: Sec. 5.5.2.2.1)

C NC N/A U COMPACT MEMBERS: All moment and braced frame columns and beams shall meet section requirements set forth by AISC 341, Table D1.1, for highly ductile members. Braced frame beams meet section requirements for moderately ductile members (Commentary: Sec. A.3.3.1.7 and A3.3.1.8. Tier 2: Sec. 5.5.2.2.4 and 5.5.4)

C NC N/A U CONNECTION STRENGTH: All the brace connections develop the yield capacity of the diagonals. (Commentary: Sec. A.3.3.1.5. Tier 2: Sec. 5.5.4.4)

Connections

C NC N/A U STEEL COLUMNS: The columns in seismic-force-resisting frames are anchored to the building foundation, and the anchorage is able to develop the least of the tensile capacity of the column, the tensile capacity of the lowest level column splice (if any), or the uplift capacity of the foundation. (Commentary: Sec. A.5.3.1. Tier 2: Sec. 5.7.3.1)

Project: _____ Location: _____

Completed by: _____ Date: _____

16.8LS LIFE SAFETY STRUCTURAL CHECKLIST FOR BUILDING TYPES S5: STEEL FRAMES WITH INFILL MASONRY SHEAR WALLS AND STIFF DIAPHRAGMS AND S5A: STEEL FRAMES WITH INFILL MASONRY SHEAR WALLS AND FLEXIBLE DIAPHRAGMS

Low Seismicity

Seismic-Force-Resisting System

C NC N/A U SHEAR STRESS CHECK: The shear stress in the reinforced masonry shear walls, calculated using the Quick Check procedure of Section 4.5.3.3, is less than 70 lb/in.^{2}. (Commentary: Sec. A.3.2.4.1. Tier 2: Sec. 5.5.3.1.1)

C NC N/A U SHEAR STRESS CHECK: The shear stress in the unreinforced masonry shear walls, calculated using the Quick Check procedure of Section 4.5.3.3, is less than 30 lb/in.^{2} for clay units and 70 lb/in.^{2} for concrete units. Bays with openings greater than 25% of the wall area shall not be included in A_w of Eq. (4-9). (Commentary: Sec. A.3.2.5.1. Tier 2: Sec. 5.5.3.1.1)

C NC N/A U INFILL WALL CONNECTIONS: Masonry is in full contact with frame. (Commentary: Sec. A.3.2.6.1. Tier 2: Sec. 5.5.3.5.1 and 5.5.3.5.3)

Connections

C NC N/A U STEEL COLUMNS: The columns in seismic-force-resisting frames are anchored to the building foundation. (Commentary: Sec. A.5.3.1. Tier 2: Sec. 5.7.3.1)

Moderate Seismicity: Complete the Following Items in Addition to the Items for Low Seismicity.

Seismic-Force-Resisting System

C NC N/A U REDUNDANCY: The number of lines of shear walls in each principal direction is greater than or equal to 2. (Commentary: Sec. A.3.2.1.1. Tier 2: Sec. 5.5.1.1)

C NC N/A U INFILL WALL ECCENTRICITY: The centerline of the infill masonry wall is not offset from the centerline of the steel framing by more than 25% of the wall thickness. (Commentary: Sec. A.3.2.6.5. Tier 2: Sec. 5.5.3.5.3)

Connections

C NC N/A U TRANSFER TO INFILL WALLS: Diaphragms are connected for transfer of loads to the infill walls. (Commentary: Sec. A.5.2.1. Tier 2: Sec. 5.7.2)

High Seismicity: Complete the Following Items in Addition to the Items for Low and Moderate Seismicity.

Seismic-Force-Resisting System

C NC N/A U PROPORTIONS: The height-to-thickness ratio of the unreinforced infill walls at each story is less than 9. (Commentary: Sec. A.3.2.6.2. Tier 2: Sec. 5.5.3.1.2)

C NC N/A U CAVITY WALLS: The infill walls are not of cavity construction. (Commentary: Sec. A.3.2.6.3. Tier 2: Sec. 5.5.3.5.2)

Flexible Diaphragms

C NC N/A U CROSS TIES: There are continuous cross ties between diaphragm chords. (Commentary: Sec. A.4.1.2. Tier 2: Sec. 5.6.1.2)

C NC N/A U STRAIGHT SHEATHING: All straight sheathed diaphragms have aspect ratios less than 2-to-1 in the direction being considered. (Commentary: Sec. A.4.2.1. Tier 2: Sec. 5.6.2)

C NC N/A U SPANS: All wood diaphragms with spans greater than 24 ft consist of wood structural panels or diagonal sheathing. (Commentary: Sec. A.4.2.2. Tier 2: Sec. 5.6.2)

C NC N/A U DIAGONALLY SHEATHED AND UNBLOCKED DIAPHRAGMS: All diagonally sheathed or unblocked wood structural panel diaphragms have horizontal spans less than 40 ft and aspect ratios less than or equal to 4-to-1. (Commentary: Sec. A.4.2.3. Tier 2: Sec. 5.6.2)

C NC N/A U OTHER DIAPHRAGMS: The diaphragm does not consist of a system other than wood, metal deck, concrete, or horizontal bracing. (Commentary: Sec. A.4.7.1. Tier 2: Sec. 5.6.5)

Connections

C NC N/A U STIFFNESS OF WALL ANCHORS: Anchors of concrete or masonry walls to wood structural elements are installed taut and are stiff enough to limit the relative movement between the wall and the diaphragm to no greater than 1/8 in. before engagement of the anchors. (Commentary: Sec. A.5.1.4. Tier 2: Sec. 5.7.1.2)

Project: _____ Location: _____

Completed by: _____ Date: _____

16.8IO IMMEDIATE OCCUPANCY STRUCTURAL CHECKLIST FOR BUILDING TYPES S5: STEEL FRAMES WITH INFILL MASONRY SHEAR WALLS AND STIFF DIAPHRAGMS AND S5A: STEEL FRAMES WITH INFILL MASONRY SHEAR WALLS AND FLEXIBLE DIAPHRAGMS

Very Low and Low Seismicity

Seismic-Force-Resisting System

C NC N/A U SHEAR STRESS CHECK: The shear stress in the reinforced masonry shear walls, calculated using the Quick Check procedure of Section 4.5.3.3, is less than 70 lb/in.^{2}. (Commentary: Sec. A.3.2.4.1. Tier 2: Sec. 5.5.3.1.1)

C NC N/A U SHEAR STRESS CHECK: The shear stress in the unreinforced masonry shear walls, calculated using the Quick Check procedure of Section 4.5.3.3, is less than 30 lb/in.^{2} for clay units and 70 lb/in.^{2} for concrete units. Bays with openings greater than 25% of the wall area shall not be included in A_w of Eq. (4-9). (Commentary: Sec. A.3.2.5.1. Tier 2: Sec. 5.5.3.1.1)

C NC N/A U INFILL WALL CONNECTIONS: Masonry is in full contact with frame. (Commentary: Sec. A.3.2.6.1. Tier 2: Sec. 5.5.3.5.1 and 5.5.3.5.3)

Connections

C NC N/A U STEEL COLUMNS: The columns in seismic-force-resisting frames are anchored to the building foundation. (Commentary: Sec. A.5.3.1. Tier 2: Sec. 5.7.3.1)

Moderate Seismicity: Complete the Following Items in Addition to the Items for Very Low and Low Seismicity.

Seismic-Force-Resisting System

C NC N/A U REDUNDANCY: The number of lines of shear walls in each principal direction is greater than or equal to 2. (Commentary: Sec. A.3.2.1.1. Tier 2: Sec. 5.5.1.1)

C NC N/A U REINFORCING AT WALL OPENINGS: All wall openings that interrupt rebar have trim reinforcing on all sides or are checked as unreinforced infill frames. (Commentary: Sec. A.3.2.4.3. Tier 2: Sec. 5.5.3.1.5)

C NC N/A U PROPORTIONS: The height-to-thickness ratio of the unreinforced infill walls at each story is less than 13. (Commentary: Sec. A.3.2.6.2. Tier 2: Sec. 5.5.3.1.2)

C NC N/A U CAVITY WALLS: The infill walls are not of cavity construction. (Commentary: Sec. A.3.2.6.3. Tier 2: Sec. 5.5.3.5.2)

C NC N/A U INFILL WALL ECCENTRICITY: The centerline of the infill masonry wall is not offset from the centerline of the steel framing by more than 25% of the wall thickness. (Commentary: Sec. A.3.2.6.5. Tier 2: Sec. 5.5.3.5.3)

Connections

C NC N/A U TRANSFER TO SHEAR WALLS: Diaphragms are connected for transfer of loads to the shear walls, and the connections are able to develop the lesser of the shear strength of the walls or diaphragms. (Commentary: Sec. A.5.2.1. Tier 2: Sec. 5.7.2)

Diaphragms (Stiff or Flexible)

C NC N/A U PLAN IRREGULARITIES: There is tensile capacity to develop the strength of the diaphragm at reentrant corners or other locations of plan irregularities. (Commentary: Sec. A.4.1.7. Tier 2: Sec. 5.6.1.4)

C NC N/A U DIAPHRAGM REINFORCEMENT AT OPENINGS: There is reinforcing around all diaphragm openings larger than 50% of the building width in either major plan dimension. (Commentary: Sec. A.4.1.8. Tier 2: Sec. 5.6.1.5)

Flexible Diaphragms

C NC N/A U CROSS TIES: There are continuous cross ties between diaphragm chords. (Commentary: Sec. A.4.1.2. Tier 2: Sec. 5.6.1.2)

C NC N/A U STRAIGHT SHEATHING: All straight sheathed diaphragms have aspect ratios less than 1-to-1 in the direction being considered. (Commentary: Sec. A.4.2.1. Tier 2: Sec. 5.6.2)

C NC N/A U SPANS: All wood diaphragms with spans greater than 12 ft consist of wood structural panels or diagonal sheathing. (Commentary: Sec. A.4.2.2. Tier 2: Sec. 5.6.2)

C NC N/A U DIAGONALLY SHEATHED AND UNBLOCKED DIAPHRAGMS: All diagonally sheathed or unblocked wood structural panel diaphragms have horizontal spans less than 30 ft and aspect ratios less than or equal to 3-to-1. (Commentary: Sec. A.4.2.3. Tier 2: Sec. 5.6.2)

C NC N/A U NONCONCRETE FILLED DIAPHRAGMS: Untopped metal deck diaphragms or metal deck diaphragms with fill other than concrete consist of horizontal spans of less than 40 ft and have aspect ratios less than 4-to-1. (Commentary: Sec. A.4.3.1. Tier 2: Sec. 5.6.3)

C NC N/A U OTHER DIAPHRAGMS: The diaphragm does not consist of a system other than wood, metal deck, concrete, or horizontal bracing. (Commentary: Sec. A.4.7.1. Tier 2: Sec. 5.6.5)

Connections

C NC N/A U STIFFNESS OF WALL ANCHORS: Anchors of concrete or masonry walls to wood structural elements are installed taut and are stiff enough to limit the relative movement between the wall and the diaphragm to no greater than 1/8 in. before engagement of the anchors. (Commentary: Sec. A.5.1.4. Tier 2: Sec. 5.7.1.2)

Foundation System

C NC N/A U DEEP FOUNDATIONS: Piles and piers are capable of transferring the lateral forces between the structure and the soil. (Commentary: Sec. A.6.2.3.)

C NC N/A U SLOPING SITES: The difference in foundation embedment depth from one side of the building to another shall not exceed one story high. (Commentary: Sec. A.6.2.4)

High Seismicity: Complete the Following Items in Addition to the Items for Very Low, Low, and Moderate Seismicity.

Seismic-Force-Resisting System

C NC N/A U PROPORTIONS: The height-to-thickness ratio of the unreinforced infill walls at each story is less than 8. (Commentary: Sec. A.3.2.6.2. Tier 2: Sec. 5.5.3.1.2)

Connections

C NC N/A U STEEL COLUMNS: The columns in seismic-force-resisting frames are anchored to the building foundation, and the anchorage is able to develop the least of the tensile capacity of the column, the tensile capacity of the lowest level column splice (if any), or the uplift capacity of the foundation. (Commentary: Sec. A.5.3.1. Tier 2: Sec. 5.7.3.1)

Project: _____ Location: _____

Completed by: _____ Date: _____

16.9LS LIFE SAFETY STRUCTURAL CHECKLIST FOR BUILDING TYPE C1: CONCRETE MOMENT FRAMES

Low Seismicity

Seismic-Force-Resisting System

C NC N/A U REDUNDANCY: The number of lines of moment frames in each principal direction is greater than or equal to 2. The number of bays of moment frames in each line is greater than or equal to 2. (Commentary: Sec. A.3.1.1.1. Tier 2: Sec. 5.5.1.1)

C NC N/A U COLUMN AXIAL STRESS CHECK: The axial stress caused by unfactored gravity loads in columns subjected to overturning forces because of seismic demands is less than $0.20f_c'$. Alternatively, the axial stress caused by overturning forces alone, calculated using the Quick Check procedure of Section 4.5.3.6, is less than $0.30f_c'$. (Commentary: Sec. A.3.1.4.2. Tier 2: Sec. 5.5.2.1.3)

Connections

C NC N/A U CONCRETE COLUMNS: All concrete columns are doweled into the foundation with a minimum of 4 bars. (Commentary: Sec. A.5.3.2. Tier 2: Sec. 5.7.3.1)

Moderate Seismicity: Complete the Following Items in Addition to the Items for Low Seismicity.

Seismic-Force-Resisting System

C NC N/A U INTERFERING WALLS: All concrete and masonry infill walls placed in moment frames are isolated from structural elements. (Commentary: Sec. A.3.1.2.1. Tier 2: Sec. 5.5.2.1.1)

C NC N/A U COLUMN SHEAR STRESS CHECK: The shear stress in the concrete columns, calculated using the Quick Check procedure of Section 4.5.3.2, is less than the greater of 100 lb/in.^{2} or $2\sqrt{f_c'}$. (Commentary: Sec. A.3.1.4.1. Tier 2: Sec. 5.5.2.1.4)

C NC N/A U FLAT SLAB FRAMES: The seismic-force-resisting system is not a frame consisting of columns and a flat slab or plate without beams. (Commentary: Sec. A.3.1.4.3. Tier 2: Sec. 5.5.2.3.1)

High Seismicity: Complete the Following Items in Addition to the Items for Low and Moderate Seismicity.

Seismic-Force-Resisting System

C NC N/A U PRESTRESSED FRAME ELEMENTS: The seismic-force-resisting frames do not include any prestressed or posttensioned elements where the average prestress exceeds the lesser of 700 lb/in.^{2} or $f_c'/6$ at potential hinge locations. The average prestress is calculated in accordance with the Quick Check procedure of Section 4.5.3.8. (Commentary: Sec. A.3.1.4.4. Tier 2: Sec. 5.5.2.3.2)

C NC N/A U CAPTIVE COLUMNS: There are no columns at a level with height/depth ratios less than 50% of the nominal height/depth ratio of the typical columns at that level. (Commentary: Sec. A.3.1.4.5. Tier 2: Sec. 5.5.2.3.3)

C NC N/A U NO SHEAR FAILURES: The shear capacity of frame members is able to develop the moment capacity at the ends of the members. (Commentary: Sec. A.3.1.4.6. Tier 2: Sec. 5.5.2.3.4)

C NC N/A U STRONG COLUMN—WEAK BEAM: The sum of the moment capacity of the columns is 20% greater than that of the beams at frame joints. (Commentary: Sec. A.3.1.4.7. Tier 2: Sec. 5.5.2.1.5)

C NC N/A U BEAM BARS: At least two longitudinal top and two longitudinal bottom bars extend continuously throughout the length of each frame beam. At least 25% of the longitudinal bars provided at the joints for either positive or negative moment are continuous throughout the length of the members. (Commentary: A.3.1.4.8. Tier 2: Sec. 5.5.2.3.5)

C NC N/A U COLUMN-BAR SPLICES: All column-bar lap splice lengths are greater than $35d_b$ and are enclosed by ties spaced at or less than $8d_b$. Alternatively, column bars are spliced with mechanical couplers with a capacity of at least 1.25 times the nominal yield strength of the spliced bar. (Commentary: Sec. A.3.1.4.9. Tier 2: Sec. 5.5.2.3.6)

C NC N/A U BEAM-BAR SPLICES: The lap splices or mechanical couplers for longitudinal beam reinforcing are not located within $l_b/4$ of the joints and are not located in the vicinity of potential plastic hinge locations. (Commentary: Sec. A.3.1.4.10. Tier 2: Sec. 5.5.2.3.6)

C NC N/A U COLUMN-TIE SPACING: Frame columns have ties spaced at or less than $d/4$ throughout their length and at or less than $8d_b$ at all potential plastic hinge locations. (Commentary: Sec. A.3.1.4.11. Tier 2: Sec. 5.5.2.3.7)

C NC N/A U STIRRUP SPACING: All beams have stirrups spaced at or less than $d/2$ throughout their length. At potential plastic hinge locations, stirrups are spaced at or less than the minimum of $8d_b$ or $d/4$. (Commentary: Sec. A.3.1.4.12. Tier 2: Sec. 5.5.2.3.7)

C NC N/A U JOINT TRANSVERSE REINFORCING: Beam–column joints have ties spaced at or less than $8d_b$. (Commentary: Sec. A.3.1.4.13. Tier 2: Sec. 5.5.2.3.8)

C NC N/A U DEFLECTION COMPATIBILITY: Secondary components have the shear capacity to develop the flexural strength of the components. (Commentary: Sec. A.3.1.6.2. Tier 2: Sec. 5.5.2.5.2)

C NC N/A U FLAT SLABS: Flat slabs or plates not part of the seismic-force-resisting system have continuous bottom steel through the column joints. (Commentary: Sec. A.3.1.6.3. Tier 2: Sec. 5.5.2.5.3)

Diaphragms

C NC N/A U DIAPHRAGM CONTINUITY: The diaphragms are not composed of split-level floors and do not have expansion joints. (Commentary: Sec. A.4.1.1. Tier 2: Sec. 5.6.1.1)

Connections

C NC N/A U UPLIFT AT PILE CAPS: Pile caps have top reinforcement, and piles are anchored to the pile caps. (Commentary: Sec. A.5.3.8. Tier 2: Sec. 5.7.3.5)

Project: _____ Location: _____

Completed by: _____ Date: _____

16.9IO IMMEDIATE OCCUPANCY STRUCTURAL CHECKLIST FOR BUILDING TYPE C1: CONCRETE MOMENT FRAMES

Very Low Seismicity

Seismic-Force-Resisting System

C NC N/A U REDUNDANCY: The number of lines of moment frames in each principal direction is greater than or equal to 2. The number of bays of moment frames in each line is greater than or equal to 3. (Commentary: Sec. A.3.1.1.1. Tier 2: Sec. 5.5.1.1)

C NC N/A U INTERFERING WALLS: All concrete and masonry infill walls placed in moment frames are isolated from structural elements. (Commentary: Sec. A.3.1.2.1. Tier 2: Sec. 5.5.2.1.1)

C NC N/A U COLUMN SHEAR STRESS CHECK: The shear stress in the concrete columns, calculated using the Quick Check procedure of Section 4.5.3.2, is less than the greater of 100 lb/in.^{2} or $2\sqrt{f_c'}$. (Commentary: Sec. A.3.1.4.1. Tier 2: Sec. 5.5.2.1.4)

C NC N/A U COLUMN AXIAL STRESS CHECK: The axial stress caused by unfactored gravity loads in columns subjected to overturning demands is less than $0.13f_c'$. Alternatively, the axial stress caused by overturning forces alone, calculated using the Quick Check procedure of Section 4.5.3.6, is less than $0.30f_c'$. (Commentary: Sec. A.3.1.4.2. Tier 2: Sec. 5.5.2.1.3)

Connections

C NC N/A U CONCRETE COLUMNS: All concrete columns are doweled into the foundation, and the dowels are able to develop the tensile capacity of reinforcement in columns of the seismic-force-resisting system. (Commentary: Sec. A.5.3.2. Tier 2: Sec. 5.7.3.1)

Low and Moderate Seismicity: Complete the Following Items in Addition to the Items for Very Low Seismicity.

Seismic-Force-Resisting System

C NC N/A U FLAT SLAB FRAMES: The seismic-force-resisting system is not a frame consisting of columns and a flat slab or plate without beams. (Commentary: Sec. A.3.1.4.3. Tier 2: Sec. 5.5.2.3.1)

C NC N/A U PRESTRESSED FRAME ELEMENTS: The seismic-force-resisting frames shall not include any prestressed or posttensioned elements where the average prestress exceeds the lesser of 700 lb/in.^{2} or $f_c'/6$ at potential hinge locations. The average prestress is calculated in accordance with the Quick Check procedure of Section 4.5.3.8. (Commentary: Sec. A.3.1.4.4. Tier 2: Sec. 5.5.2.3.2)

C NC N/A U CAPTIVE COLUMNS: There are no columns at a level with height/depth ratios less than 75% of the nominal height/depth ratio of the typical columns at that level. (Commentary: Sec. A.3.1.4.5. Tier 2: Sec. 5.5.2.3.3)

C NC N/A U NO SHEAR FAILURES: The shear capacity of frame members is able to develop the moment capacity at the ends of the members. (Commentary: Sec. A.3.1.4.6. Tier 2: Sec. 5.5.2.3.4)

C NC N/A U STRONG COLUMN—WEAK BEAM: The sum of the moment capacity of the columns is 20% greater than that of the beams at frame joints. (Commentary: Sec. A.3.1.4.7. Tier 2: Sec. 5.5.2.1.5)

C NC N/A U BEAM BARS: At least two longitudinal top and two longitudinal bottom bars extend continuously throughout the length of each frame beam. At least 25% of the longitudinal bars provided at the joints for either positive or negative moment are continuous throughout the length of the members. (Commentary: Sec. A.3.1.4.8. Tier 2: Sec. 5.5.2.3.5)

C NC N/A U COLUMN-BAR SPLICES: All column-bar lap splice lengths are greater than $50d_b$ and are enclosed by ties spaced at or less than $8d_b$. Alternatively, column bars are spliced with mechanical couplers with a capacity of at least 1.25 times the nominal yield strength of the spliced bar. (Commentary: Sec. A.3.1.4.9. Tier 2: Sec. 5.5.2.3.6)

C NC N/A U BEAM-BAR SPLICES: The lap splices or mechanical couplers for longitudinal beam reinforcing are not located within $l_b/4$ of the joints and shall not be located in the vicinity of potential plastic hinge locations. (Commentary: Sec. A.3.1.4.10. Tier 2: Sec. 5.5.2.3.6)

C NC N/A U COLUMN-TIE SPACING: Frame columns have ties spaced at or less than $d/4$ throughout their length and at or less than $8d_b$ at all potential plastic hinge locations. (Commentary: Sec. A.3.1.4.11. Tier 2: Sec. 5.5.2.3.7)

C NC N/A U STIRRUP SPACING: All beams have stirrups spaced at or less than $d/2$ throughout their length. At potential plastic hinge locations, stirrups are spaced at or less than the minimum of $8d_b$ or $d/4$. (Commentary: Sec. A.3.1.4.12. Tier 2: Sec. 5.5.2.3.7)

C NC N/A U JOINT TRANSVERSE REINFORCING: Beam–column joints have ties spaced at or less than $8d_b$. (Commentary: Sec. A.3.1.4.13. Tier 2: Sec. 5.5.2.3.8)

C NC N/A U JOINT ECCENTRICITY: There are no eccentricities larger than 20% of the smallest column plan dimension between girder and column centerlines. (Commentary: Sec. A.3.1.4.14. Tier 2: Sec. 5.5.2.3.9)

C NC N/A U STIRRUP AND TIE HOOKS: The beam stirrups and column ties are anchored into the member cores with hooks of 135 degrees or more. (Commentary: Sec. A.3.1.4.15. Tier 2: Sec. 5.5.2.3.10)

C NC N/A U DEFLECTION COMPATIBILITY: Secondary components have the shear capacity to develop the flexural strength of the components and are Compliant with the following items: COLUMN-BAR SPLICES, BEAM-BAR SPLICES, COLUMN-TIE SPACING, STIRRUP SPACING, and STIRRUP AND TIE HOOKS. (Commentary: Sec. A.3.1.6.2. Tier 2: Sec. 5.5.2.5.2)

C NC N/A U FLAT SLABS: Flat slabs or plates not part of the seismic-force-resisting system have continuous bottom steel through the column joints. (Commentary: Sec. A.3.1.6.3. Tier 2: Sec. 5.5.2.5.3)

Diaphragms

C NC N/A U DIAPHRAGM CONTINUITY: The diaphragms are not composed of split-level floors and do not have expansion joints. (Commentary: Sec. A.4.1.1. Tier 2: Sec. 5.6.1.1)

C NC N/A U PLAN IRREGULARITIES: There is tensile capacity to develop the strength of the diaphragm at reentrant corners or other locations of plan irregularities. (Commentary: Sec. A.4.1.7. Tier 2: Sec. 5.6.1.4)

C NC N/A U DIAPHRAGM REINFORCEMENT AT OPENINGS: There is reinforcing around all diaphragm openings larger than 50% of the building width in either major plan dimension. (Commentary: Sec. A.4.1.8. Tier 2: Sec. 5.6.1.5)

Connections

C NC N/A U UPLIFT AT PILE CAPS: Pile caps have top reinforcement, and piles are anchored to the pile caps; the pile cap reinforcement and pile anchorage are able to develop the tensile capacity of the piles. (Commentary: Sec. A.5.3.8. Tier 2: Sec. 5.7.3.5)

Project: _____ Location: _____

Completed by: _____ Date: _____

16.10LS LIFE SAFETY STRUCTURAL CHECKLIST FOR BUILDING TYPES C2: CONCRETE SHEAR WALLS WITH STIFF DIAPHRAGMS AND C2A: CONCRETE SHEAR WALLS WITH FLEXIBLE DIAPHRAGMS

Low and Moderate Seismicity

Seismic-Force-Resisting System

C NC N/A U COMPLETE FRAMES: Steel or concrete frames classified as secondary components form a complete vertical-load-carrying system. (Commentary: Sec. A.3.1.6.1. Tier 2: Sec. 5.5.2.5.1)

C NC N/A U REDUNDANCY: The number of lines of shear walls in each principal direction is greater than or equal to 2. (Commentary: Sec. A.3.2.1.1. Tier 2: Sec. 5.5.1.1)

C NC N/A U SHEAR STRESS CHECK: The shear stress in the concrete shear walls, calculated using the Quick Check procedure of Section 4.5.3.3, is less than the greater of 100 lb/in.^{2} or $2\sqrt{f'_c}$. (Commentary: Sec. A.3.2.2.1. Tier 2: Sec. 5.5.3.1.1)

C NC N/A U REINFORCING STEEL: The ratio of reinforcing steel area to gross concrete area is not less than 0.0012 in the vertical direction and 0.0020 in the horizontal direction. (Commentary: Sec. A.3.2.2.2. Tier 2: Sec. 5.5.3.1.3)

Connections

C NC N/A U WALL ANCHORAGE AT FLEXIBLE DIAPHRAGMS: Exterior concrete or masonry walls that are dependent on flexible diaphragms for lateral support are anchored for out-of-plane forces at each diaphragm level with steel anchors, reinforcing dowels, or straps that are developed into the diaphragm. Connections have adequate strength to resist the connection force calculated in the Quick Check procedure of Section 4.5.3.7. (Commentary: Sec. A.5.1.1. Tier 2: Sec. 5.7.1.1)

C NC N/A U TRANSFER TO SHEAR WALLS: Diaphragms are connected for transfer of seismic forces to the shear walls. (Commentary: Sec. A.5.2.1. Tier 2: Sec. 5.7.2)

C NC N/A U FOUNDATION DOWELS: Wall reinforcement is doweled into the foundation with vertical bars equal in size and spacing to the vertical wall reinforcing immediately above the foundation. (Commentary: Sec. A.5.3.5. Tier 2: Sec. 5.7.3.4)

High Seismicity: Complete the Following Items in Addition to the Items for Low and Moderate Seismicity.

Seismic-Force-Resisting System

C NC N/A U DEFLECTION COMPATIBILITY: Secondary components have the shear capacity to develop the flexural strength of the components. (Commentary: Sec. A.3.1.6.2. Tier 2: Sec. 5.5.2.5.2)

C NC N/A U FLAT SLABS: Flat slabs or plates not part of the seismic-force-resisting system have continuous bottom steel through the column joints. (Commentary: Sec. A.3.1.6.3. Tier 2: Sec. 5.5.2.5.3)

C NC N/A U COUPLING BEAMS: The stirrups in coupling beams over means of egress are spaced at or less than $d/2$ and are anchored into the confined core of the beam with hooks of 135 degrees or more. The ends of both walls to which the coupling beam is attached are supported at each end to resist vertical loads caused by overturning. (Commentary: Sec. A.3.2.2.3. Tier 2: Sec. 5.5.3.2.1)

Connections

C NC N/A U UPLIFT AT PILE CAPS: Pile caps have top reinforcement, and piles are anchored to the pile caps. (Commentary: Sec. A.5.3.8. Tier 2: Sec. 5.7.3.5)

Diaphragms (Flexible or Stiff)

C NC N/A U DIAPHRAGM CONTINUITY: The diaphragms are not composed of split-level floors and do not have expansion joints. (Commentary: Sec. A.4.1.1. Tier 2: Sec. 5.6.1.1)

C NC N/A U OPENINGS AT SHEAR WALLS: Diaphragm openings immediately adjacent to the shear walls are less than 25% of the wall length. (Commentary: Sec. A.4.1.4. Tier 2: Sec. 5.6.1.3)

Flexible Diaphragms

C NC N/A U CROSS TIES: There are continuous cross ties between diaphragm chords. (Commentary: Sec. A.4.1.2. Tier 2: Sec. 5.6.1.2)

C NC N/A U STRAIGHT SHEATHING: All straight sheathed diaphragms have aspect ratios less than 2-to-1 in the direction being considered. (Commentary: Sec. A.4.2.1. Tier 2: Sec. 5.6.2)

C NC N/A U SPANS: All wood diaphragms with spans greater than 24 ft consist of wood structural panels or diagonal sheathing. (Commentary: Sec. A.4.2.2. Tier 2: Sec. 5.6.2)

C NC N/A U DIAGONALLY SHEATHED AND UNBLOCKED DIAPHRAGMS: All diagonally sheathed or unblocked wood structural panel diaphragms have horizontal spans less than 40 ft and aspect ratios less than or equal to 4-to-1. (Commentary: Sec. A.4.2.3. Tier 2: Sec. 5.6.2)

C NC N/A U OTHER DIAPHRAGMS: The diaphragm does not consist of a system other than wood, metal deck, concrete, or horizontal bracing. (Commentary: Sec. A.4.7.1. Tier 2: Sec. 5.6.5)

Project: _____ Location: _____

Completed by: _____ Date: _____

16.10IO IMMEDIATE OCCUPANCY STRUCTURAL CHECKLIST FOR BUILDING TYPES C2: CONCRETE SHEAR WALLS WITH STIFF DIAPHRAGMS AND C2A: CONCRETE SHEAR WALLS WITH FLEXIBLE DIAPHRAGMS

Very Low Seismicity

Seismic-Force-Resisting System

C NC N/A U COMPLETE FRAMES: Steel or concrete frames classified as secondary components form a complete vertical-load-carrying system. (Commentary: Sec. A.3.1.6.1. Tier 2: Sec. 5.5.2.5.1)

C NC N/A U REDUNDANCY: The number of lines of shear walls in each principal direction is greater than or equal to 2. (Commentary: Sec. A.3.2.1.1. Tier 2: Sec. 5.5.1.1)

C NC N/A U SHEAR STRESS CHECK: The shear stress in the concrete shear walls, calculated using the Quick Check procedure of Section 4.5.3.3, is less than the greater of 100 lb/in.^{2} or $2\sqrt{f_c'}$. (Commentary: Sec. A.3.2.2.1. Tier 2: Sec. 5.5.3.1.1)

C NC N/A U REINFORCING STEEL: The ratio of reinforcing steel area to gross concrete area is not less than 0.0012 in the vertical direction and 0.0020 in the horizontal direction. The spacing of reinforcing steel is equal to or less than 18 in. (Commentary: Sec. A.3.2.2.2. Tier 2: Sec. 5.5.3.1.3)

Connections

C NC N/A U WALL ANCHORAGE AT FLEXIBLE DIAPHRAGMS: Exterior concrete or masonry walls that are dependent on flexible diaphragms for lateral support are anchored for out-of-plane forces at each diaphragm level with steel anchors, reinforcing dowels, or straps that are developed into the diaphragm. Connections have adequate strength to resist the connection force calculated in the Quick Check procedure of Section 4.5.3.7. (Commentary: Sec. A.5.1.1. Tier 2: Sec. 5.7.1.1)

C NC N/A U TRANSFER TO SHEAR WALLS: Diaphragms are connected for transfer of loads to the shear walls, and the connections are able to develop the lesser of the shear strength of the walls or diaphragms. (Commentary: Sec. A.5.2.1. Tier 2: Sec. 5.7.2)

C NC N/A U FOUNDATION DOWELS: Wall reinforcement is doweled into the foundation, and the dowels are able to develop the lesser of the strength of the walls or the uplift capacity of the foundation. (Commentary: Sec. A.5.3.5. Tier 2: Sec. 5.7.3.4)

Foundation System

C NC N/A U DEEP FOUNDATIONS: Piles and piers are capable of transferring the lateral forces between the structure and the soil. (Commentary: Sec. A.6.2.3)

C NC N/A U SLOPING SITES: The difference in foundation embedment depth from one side of the building to another shall not exceed one story high. (Commentary: Sec. A.6.2.4)

Low, Moderate, and High Seismicity: Complete the Following Items in Addition to the Items for Very Low Seismicity.

Seismic-Force-Resisting System

C NC N/A U DEFLECTION COMPATIBILITY: Secondary components have the shear capacity to develop the flexural strength of the components and are compliant with the following items: COLUMN-BAR SPLICES, BEAM-BAR SPLICES, COLUMN-TIE SPACING, STIRRUP SPACING, and STIRRUP AND TIE HOOK in the Immediate Occupancy Structural Checklist for Building Type C1. (Commentary: Sec. A.3.1.6.2. Tier 2: Sec. 5.5.2.5.2)

C NC N/A U FLAT SLABS: Flat slabs or plates not part of seismic-force-resisting system have continuous bottom steel through the column joints. (Commentary: Sec. A.3.1.6.3. Tier 2: Sec. 5.5.2.5.3)

C NC N/A U COUPLING BEAMS: The stirrups in coupling beams over means of egress are spaced at or less than $d/2$ and are anchored into the confined core of the beam with hooks of 135 degrees or more. The ends of both walls to which the coupling beam is attached are supported at each end to resist vertical loads caused by overturning. Coupling beams have the capacity in shear to develop the uplift capacity of the adjacent wall. (Commentary: Sec.A.3.2.2.3. Tier 2: Sec. 5.5.3.2.1)

C NC N/A U OVERTURNING: All shear walls have aspect ratios less than 4-to-1. Wall piers need not be considered. (Commentary: Sec. A.3.2.2.4. Tier 2: Sec. 5.5.3.1.4)

C NC N/A U CONFINEMENT REINFORCING: For shear walls with aspect ratios greater than 2-to-1, the boundary elements are confined with spirals or ties with spacing less than $8d_b$. (Commentary: Sec. A.3.2.2.5. Tier 2: Sec. 5.5.3.2.2)

C NC N/A U WALL REINFORCING AT OPENINGS: There is added trim reinforcement around all wall openings with a dimension greater than three times the thickness of the wall. (Commentary: Sec. A.3.2.2.6. Tier 2: Sec. 5.5.3.1.5)

C NC N/A U WALL THICKNESS: Thicknesses of bearing walls are not less than 1/25 the unsupported height or length, whichever is shorter, nor less than 4 in. (Commentary: Sec. A.3.2.2.7. Tier 2: Sec. 5.5.3.1.2)

Connections

C NC N/A U UPLIFT AT PILE CAPS: Pile caps shall have top reinforcement, and piles are anchored to the pile caps; the pile cap reinforcement and pile anchorage are able to develop the tensile capacity of the piles. (Commentary: Sec. A.5.3.8.Tier 2: Sec. 5.7.3.5)

Diaphragms (Flexible or Stiff)

C NC N/A U DIAPHRAGM CONTINUITY: The diaphragms are not composed of split-level floors and do not have expansion joints. (Commentary: Sec. A.4.1.1. Tier 2: Sec. 5.6.1.1)

C NC N/A U OPENINGS AT SHEAR WALLS: Diaphragm openings immediately adjacent to the shear walls are less than 15% of the wall length. (Commentary: Sec. A.4.1.4. Tier 2: Sec. 5.6.1.3)

C NC N/A U PLAN IRREGULARITIES: There is tensile capacity to develop the strength of the diaphragm at reentrant corners or other locations of plan irregularities. (Commentary: Sec. A.4.1.7. Tier 2: Sec. 5.6.1.4)

C NC N/A U DIAPHRAGM REINFORCEMENT AT OPENINGS: There is reinforcing around all diaphragm openings larger than 50% of the building width in either major plan dimension. (Commentary: Sec. A.4.1.8. Tier 2: Sec. 5.6.1.5)

Flexible Diaphragms

C NC N/A U CROSS TIES: There are continuous cross ties between diaphragm chords. (Commentary: Sec. A.4.1.2. Tier 2: Sec. 5.6.1.2)

C NC N/A U STRAIGHT SHEATHING: All straight sheathed diaphragms have aspect ratios less than 1-to-1 in the direction being considered. (Commentary: Sec.A.4.2.1. Tier 2: Sec. 5.6.2)

C NC N/A U SPANS: All wood diaphragms with spans greater than 12 ft consist of wood structural panels or diagonal sheathing. (Commentary: Sec. A.4.2.2. Tier 2: Sec. 5.6.2)

C NC N/A U DIAGONALLY SHEATHED AND UNBLOCKED DIAPHRAGMS: All diagonally sheathed or unblocked wood structural panel diaphragms have horizontal spans less than 30 ft and aspect ratios less than or equal to 3-to-1. (Commentary: Sec. A.4.2.3. Tier 2: Sec. 5.6.2)

C NC N/A U NONCONCRETE FILLED DIAPHRAGMS: Untopped metal deck diaphragms or metal deck diaphragms with fill other than concrete consist of horizontal spans of less than 40 ft and have aspect ratios less than 4-to-1. (Commentary: Sec. A.4.3.1. Tier 2: Sec. 5.6.3)

C NC N/A U OTHER DIAPHRAGMS: The diaphragm does not consist of a system other than wood, metal deck, concrete, or horizontal bracing. (Commentary: Sec. A.4.7.1. Tier 2: Sec. 5.6.5)

Project: _____ Location: _____

Completed by: _____ Date: _____

16.11LS LIFE SAFETY STRUCTURAL CHECKLIST FOR BUILDING TYPES C3: CONCRETE FRAMES WITH INFILL MASONRY SHEAR WALLS AND C3A: CONCRETE FRAMES WITH INFILL MASONRY SHEAR WALLS AND FLEXIBLE DIAPHRAGMS

Low and Moderate Seismicity

Seismic-Force-Resisting System

C NC N/A U REDUNDANCY: The number of lines of shear walls in each principal direction is greater than or equal to 2. (Commentary: Sec. A.3.2.1.1. Tier 2: Sec. 5.5.1.1)

C NC N/A U SHEAR STRESS CHECK: The shear stress in the reinforced masonry shear walls, calculated using the Quick Check procedure of Section 4.5.3.3, is less than 70 lb/in.^{2}. (Commentary: Sec. A.3.2.4.1. Tier 2: Sec. 5.5.3.1.1)

C NC N/A U SHEAR STRESS CHECK: The shear stress in the unreinforced masonry shear walls, calculated using the Quick Check procedure of Section 4.5.3.3, is less than 30 lb/in.^{2} for clay units and 70 lb/in.^{2} for concrete units. Bays with openings greater than 25% of the wall area shall not be included in A_w of Eq. (4-9). (Commentary: Sec. A.3.2.5.1. Tier 2: Sec. 5.5.3.1.1)

C NC N/A U INFILL WALL CONNECTIONS: Masonry is in full contact with frame. (Commentary: A.3.2.6.1. Tier 2: Sec. 5.5.3.5.1 and 5.5.3.5.3)

Connections

C NC N/A U TRANSFER TO SHEAR WALLS: Diaphragms are connected for transfer of loads to the shear walls. (Commentary: Sec. A.5.2.1. Tier 2: Sec. 5.7.2)

C NC N/A U CONCRETE COLUMNS: All concrete columns are doweled into the foundation with a minimum of four bars. (Commentary: Sec. A.5.3.2. Tier 2: Sec. 5.7.3.1)

High Seismicity: Complete the Following Items in Addition to the Items for Low and Moderate Seismicity.

Seismic-Force-Resisting System

C NC N/A U DEFLECTION COMPATIBILITY: Secondary components have the shear capacity to develop the flexural strength of the components. (Commentary: Sec. A.3.1.6.2. Tier 2: Sec. 5.5.2.5.2)

C NC N/A U FLAT SLABS: Flat slabs or plates not part of the seismic-force-resisting system have continuous bottom steel through the column joints. (Commentary: Sec. A.3.1.6.3. Tier 2: Sec. 5.5.2.5.3)

C NC N/A U PROPORTIONS: The height-to-thickness ratio of the unreinforced infill walls at each story is less than 9. (Commentary: A.3.2.6.2. Tier 2: Sec. 5.5.3.1.2)

C NC N/A U CAVITY WALLS: The infill walls are not of cavity construction. (Commentary: Sec. A.3.2.6.3. Tier 2: Sec. 5.5.3.5.2)

C NC N/A U INFILL WALLS: The infill walls are continuous to the soffits of the frame beams and to the columns to either side. (Commentary: Sec. A.3.2.6.4. Tier 2: Sec. 5.5.3.5.3)

Connections

C NC N/A U UPLIFT AT PILE CAPS: Pile caps have top reinforcement, and piles are anchored to the pile caps. (Commentary: Sec. A.5.3.8. Tier 2: Sec. 5.7.3.5)

C NC N/A U STIFFNESS OF WALL ANCHORS: Anchors of concrete or masonry walls to wood structural elements are installed taut and are stiff enough to limit the relative movement between the wall and the diaphragm to no greater than 1/8 in. before engagement of the anchors. (Commentary: Sec. A.5.1.4. Tier 2: Sec. 5.7.1.2)

Diaphragms (Flexible or Stiff)

C NC N/A U DIAPHRAGM CONTINUITY: The diaphragms are not composed of split-level floors and do not have expansion joints. (Commentary: Sec. A.4.1.1. Tier 2: Sec. 5.6.1.1)

C NC N/A U OPENINGS AT SHEAR WALLS: Diaphragm openings immediately adjacent to the shear walls are less than 25% of the wall length. (Commentary: Sec. A.4.1.4. Tier 2: Sec. 5.6.1.3)

C NC N/A U OPENINGS AT EXTERIOR MASONRY SHEAR WALLS: Diaphragm openings immediately adjacent to exterior masonry shear walls are not greater than 8 ft long. (Commentary: Sec. A.4.1.6. Tier 2: Sec. 5.6.1.3)

Flexible Diaphragms

C NC N/A U CROSS TIES: There are continuous cross ties between diaphragm chords. (Commentary: Sec. A.4.1.2. Tier 2: Sec. 5.6.1.2)

C NC N/A U STRAIGHT SHEATHING: All straight sheathed diaphragms have aspect ratios less than 2-to-1 in the direction being considered. (Commentary: Sec. A.4.2.1. Tier 2: Sec. 5.6.2)

C NC N/A U SPANS: All wood diaphragms with spans greater than 24 ft consist of wood structural panels or diagonal sheathing. (Commentary: Sec. A.4.2.2. Tier 2: Sec. 5.6.2)

C NC N/A U DIAGONALLY SHEATHED AND UNBLOCKED DIAPHRAGMS: All diagonally sheathed or unblocked wood structural panel diaphragms have horizontal spans less than 40 ft and aspect ratios less than or equal to 4-to-1. (Commentary: Sec. A.4.2.3. Tier 2: Sec. 5.6.2)

C NC N/A U OTHER DIAPHRAGMS: The diaphragm does not consist of a system other than wood, metal deck, concrete, or horizontal bracing. (Commentary: Sec. A.4.7.1. Tier 2: Sec. 5.6.5)

Project: _____ Location: _____

Completed by: _____ Date: _____

16.11IO IMMEDIATE OCCUPANCY STRUCTURAL CHECKLIST FOR BUILDING TYPES C3: CONCRETE FRAMES WITH INFILL MASONRY SHEAR WALLS AND STIFF DIAPHRAGMS AND C3A: CONCRETE FRAMES WITH INFILL MASONRY SHEAR WALLS AND FLEXIBLE DIAPHRAGMS

Very Low Seismicity

Seismic-Force-Resisting System

C NC N/A U REDUNDANCY: The number of lines of shear walls in each principal direction is greater than or equal to 2. (Commentary: Sec. A.3.2.1.1. Tier 2: Sec. 5.5.1.1)

C NC N/A U SHEAR STRESS CHECK: The shear stress in the reinforced masonry shear walls, calculated using the Quick Check procedure of Section 4.5.3.3, is less than 70 lb/in.^{2}. (Commentary: Sec. A.3.2.4.1. Tier 2: Sec. 5.5.3.1.1)

C NC N/A U SHEAR STRESS CHECK: The shear stress in the unreinforced masonry shear walls, calculated using the Quick Check procedure of Section 4.5.3.3, is less than 30 lb/in.^{2} for clay units and 70 lb/in.^{2} for concrete units. Bays with openings greater than 25% of the wall area shall not be included in A_w of Eq. (4-9). (Commentary: Sec. A.3.2.5.1. Tier 2: Sec. 5.5.3.1.1)

C NC N/A U INFILL WALL CONNECTIONS: Masonry is in full contact with frame. (Commentary: Sec. A.3.2.6.1. Tier 2: Sec. 5.5.3.5.1 and 5.5.3.5.3)

Connections

C NC N/A U TRANSFER TO SHEAR WALLS: Diaphragms are connected for transfer of loads to the shear walls, and the connections are able to develop the lesser of the shear strength of the walls or diaphragms. (Commentary: Sec. A.5.2.1. Tier 2: Sec. 5.7.2)

C NC N/A U CONCRETE COLUMNS: All concrete columns are doweled into the foundation with a minimum of four bars, and the dowels are able to develop the tensile capacity of reinforcement in columns of the seismic-force-resisting system. (Commentary: Sec. A.5.3.2. Tier 2: Sec. 5.7.3.1)

Low and Moderate Seismicity: Complete the Following Items in Addition to the Items for Very Low Seismicity.

Seismic-Force-Resisting System

C NC N/A U DEFLECTION COMPATIBILITY: Secondary components shall have the shear capacity to develop the flexural strength of the components and are Compliant with the following items: COLUMN-BAR SPLICES, BEAM-BAR SPLICES, COLUMN-TIE SPACING, STIRRUP SPACING, and STIRRUP AND TIE HOOKS. (Commentary: Sec. A.3.1.6.2. Tier 2: Sec. 5.5.2.5.2)

C NC N/A U FLAT SLABS: Flat slabs or plates not part of the seismic-force-resisting system have continuous bottom steel through the column joints. (Commentary: Sec. A.3.1.6.3. Tier 2: Sec. 5.5.2.5.3)

C NC N/A U REINFORCING AT WALL OPENINGS: All wall openings that interrupt rebar have trim reinforcing on all sides. (Commentary: Sec. A.3.2.4.3. Tier 2: Sec. 5.5.3.1.5)

C NC N/A U PROPORTIONS: The height-to-thickness ratio of the unreinforced infill walls at each story is less than 13. (Commentary: Sec. A.3.2.6.2. Tier 2: Sec. 5.5.3.1.2)

C NC N/A U CAVITY WALLS: The infill walls are not of cavity construction. (Commentary: Sec. A.3.2.6.3. Tier 2: Sec. 5.5.3.5.2)

C NC N/A U INFILL WALLS: The infill walls are continuous to the soffits of the frame beams and to the columns to either side. (Commentary: Sec. A.3.2.6.4. Tier 2: Sec. 5.5.3.5.3)

Connections

C NC N/A U UPLIFT AT PILE CAPS: Pile caps shall have top reinforcement, and piles are anchored to the pile caps; the pile cap reinforcement and pile anchorage are able to develop the tensile capacity of the piles. (Commentary: Sec. A.5.3.8. Tier 2: Sec. 5.7.3.5)

C NC N/A U STIFFNESS OF WALL ANCHORS: Anchors of concrete or masonry walls to wood structural elements are installed taut and are stiff enough to limit the relative movement between the wall and the diaphragm to no greater than 1/8 in. before engagement of the anchors. (Commentary: Sec. A.5.1.4. Tier 2: Sec. 5.7.1.2)

Diaphragms (Flexible or Stiff)

C NC N/A U DIAPHRAGM CONTINUITY: The diaphragms are not composed of split-level floors and shall not have expansion joints. (Commentary: Sec. A.4.1.1. Tier 2: Sec. 5.6.1.1)

C NC N/A U OPENINGS AT SHEAR WALLS: Diaphragm openings immediately adjacent to the shear walls are less than 15% of the wall length. (Commentary: Sec. A.4.1.4. Tier 2: Sec. 5.6.1.3)

C NC N/A U OPENINGS AT EXTERIOR MASONRY SHEAR WALLS: Diaphragm openings immediately adjacent to exterior masonry shear walls are not greater than 4 ft long. (Commentary: A.4.1.6. Tier 2: Sec. 5.6.1.3)

C NC N/A U PLAN IRREGULARITIES: There is tensile capacity to develop the strength of the diaphragm at reentrant corners or other locations of plan irregularities. (Commentary: Sec. A.4.1.7. Tier 2: Sec. 5.6.1.4)

C NC N/A U DIAPHRAGM REINFORCEMENT AT OPENINGS: There is reinforcing around all diaphragm openings larger than 50% of the building width in either major plan dimension. (Commentary: Sec. A.4.1.8. Tier 2: Sec. 5.6.1.5)

Flexible Diaphragms

C NC N/A U CROSS TIES: There are continuous cross ties between diaphragm chords. (Commentary: Sec. A.4.1.2. Tier 2: Sec. 5.6.1.2)

C NC N/A U STRAIGHT SHEATHING: All straight sheathed diaphragms have aspect ratios less than 1-to-1 in the direction being considered. (Commentary: Sec. A.4.2.1. Tier 2: Sec. 5.6.2)

C NC N/A U SPANS: All wood diaphragms with spans greater than 12 ft consist of wood structural panels or diagonal sheathing. (Commentary: Sec. A.4.2.2. Tier 2: Sec. 5.6.2)

C NC N/A U DIAGONALLY SHEATHED AND UNBLOCKED DIAPHRAGMS: All diagonally sheathed or unblocked wood structural panel diaphragms have horizontal spans less than 30 ft and aspect ratios less than or equal to 3-to-1. (Commentary: Sec. A.4.2.3. Tier 2: Sec. 5.6.2)

C NC N/A U NONCONCRETE FILLED DIAPHRAGMS: Untopped metal deck diaphragms or metal deck diaphragms with fill other than concrete consist of horizontal spans of less than 40 ft and shall have aspect ratios less than 4-to-1. (Commentary: Sec. A.4.3.1. Tier 2: Sec. 5.6.3)

C NC N/A U OTHER DIAPHRAGMS: The diaphragm does not consist of a system other than wood, metal deck, concrete, or horizontal bracing. (Commentary: Sec. A.4.7.1. Tier 2: Sec. 5.6.5)

High Seismicity: Complete the Following Items in Addition to the Items for Very Low, Low, and Moderate Seismicity.

Seismic-Force-Resisting System

C NC N/A U PROPORTIONS: The height-to-thickness ratio of the unreinforced infill walls at each story is less than 8. (Commentary: Sec. A.3.2.6.2. Tier 2: Sec. 5.5.3.1.2)

Project: _____ Location: _____

Completed by: _____ Date: _____

16.12LS LIFE SAFETY STRUCTURAL CHECKLIST FOR BUILDING TYPES PC1: PRECAST OR TILT-UP CONCRETE SHEAR WALLS WITH FLEXIBLE DIAPHRAGMS AND PC1A: PRECAST OR TILT-UP CONCRETE SHEAR WALLS WITH STIFF DIAPHRAGMS

Low Seismicity

Connections

C NC N/A U WALL ANCHORAGE: Exterior concrete or masonry walls that are dependent on the diaphragm for lateral support are anchored for out-of-plane forces at each diaphragm level with steel anchors, reinforcing dowels, or straps that are developed into the diaphragm. Connections shall have adequate strength to resist the connection force calculated in the Quick Check procedure of Section 4.5.3.7. (Commentary: Sec. A.5.1.1. Tier 2: Sec. 5.7.1.1)

Moderate Seismicity: Complete the Following Items in Addition to the Items for Low Seismicity.

Seismic-Force-Resisting System

C NC N/A U REDUNDANCY: The number of lines of shear walls in each principal direction is greater than or equal to 2. (Commentary: Sec. A.3.2.1.1. Tier 2: Sec. 5.5.1.1)

C NC N/A U WALL SHEAR STRESS CHECK: The shear stress in the precast panels, calculated using the Quick Check procedure of Section 4.5.3.3, is less than the greater of 100 lb/in.^{2} or $2\sqrt{f_c'}$. (Commentary: Sec. A.3.2.3.1. Tier 2: Sec. 5.5.3.1.1)

C NC N/A U REINFORCING STEEL: The ratio of reinforcing steel area to gross concrete area is not less than 0.0012 in the vertical direction and 0.0020 in the horizontal direction. (Commentary: Sec. A.3.2.3.2. Tier 2: Sec. 5.5.3.1.3)

C NC N/A U WALL THICKNESS: Thicknesses of bearing walls shall not be less than 1/40 the unsupported height or length, whichever is shorter, nor less than 4 in. (Commentary: Sec. A.3.2.3.5. Tier 2: Sec. 5.5.3.1.2)

Diaphragms

C NC N/A U TOPPING SLAB: Precast concrete diaphragm elements are interconnected by a continuous reinforced concrete topping slab with a minimum thickness of 2 in. (Commentary: Sec. A.4.5.1. Tier 2: Sec. 5.6.4)

Connections

C NC N/A U WOOD LEDGERS: The connection between the wall panels and the diaphragm does not induce cross-grain bending or tension in the wood ledgers. (Commentary: Sec. A.5.1.2. Tier 2: Sec. 5.7.1.3)

C NC N/A U TRANSFER TO SHEAR WALLS: Diaphragms are connected for transfer of seismic forces to the shear walls. (Commentary: Sec. A.5.2.1. Tier 2: Sec. 5.7.2)

C NC N/A U TOPPING SLAB TO WALLS OR FRAMES: Reinforced concrete topping slabs that interconnect the precast concrete diaphragm elements are doweled for transfer of forces into the shear wall or frame elements. (Commentary: Sec. A.5.2.3. Tier 2: Sec. 5.7.2)

C NC N/A U GIRDER–COLUMN CONNECTION: There is a positive connection using plates, connection hardware, or straps between the girder and the column support. (Commentary: Sec. A.5.4.1. Tier 2: Sec. 5.7.4.1)

High Seismicity: Complete the Following Items in Addition to the Items for Low and Moderate Seismicity.

Seismic-Force-Resisting System

C NC N/A U DEFLECTION COMPATIBILITY FOR RIGID DIAPHRAGMS: Secondary components have the shear capacity to develop the flexural strength of the components. (Commentary: Sec. A.3.1.6.2. Tier 2: Sec. 5.5.2.5.2)

C NC N/A U WALL OPENINGS: The total width of openings along any perimeter wall line constitutes less than 75% of the length of any perimeter wall when the wall piers have aspect ratios of less than 2-to-1. (Commentary: Sec. A.3.2.3.3. Tier 2: Sec. 5.5.3.3.1)

Diaphragms

C NC N/A U CROSS TIES IN FLEXIBLE DIAPHRAGMS: There are continuous cross ties between diaphragm chords. (Commentary: Sec. A.4.1.2. Tier 2: Sec. 5.6.1.2)

C NC N/A U STRAIGHT SHEATHING: All straight sheathed diaphragms have aspect ratios less than 2-to-1 in the direction being considered. (Commentary: Sec. A.4.2.1. Tier 2: Sec. 5.6.2)

C NC N/A U SPANS: All wood diaphragms with spans greater than 24 ft consist of wood structural panels or diagonal sheathing. (Commentary: Sec. A.4.2.2. Tier 2: Sec. 5.6.2)

C NC N/A U DIAGONALLY SHEATHED AND UNBLOCKED DIAPHRAGMS: All diagonally sheathed or unblocked wood structural panel diaphragms have horizontal spans less than 40 ft and aspect ratios less than or equal to 4-to-1. (Commentary: Sec. A.4.2.3. Tier 2: Sec. 5.6.2)

C NC N/A U OTHER DIAPHRAGMS: The diaphragm does not consist of a system other than wood, metal deck, concrete, or horizontal bracing. (Commentary: Sec. A.4.7.1. Tier 2: Sec. 5.6.5)

Connections

C NC N/A U MINIMUM NUMBER OF WALL ANCHORS PER PANEL: There are at least two anchors from each precast wall panel into the diaphragm elements. (Commentary: Sec. A.5.1.3. Tier 2: Sec. 5.7.1.4)

C NC N/A U PRECAST WALL PANELS: Precast wall panels are connected to the foundation. (Commentary: Sec. A.5.3.6. Tier 2: Sec. 5.7.3.4)

C NC N/A U UPLIFT AT PILE CAPS: Pile caps have top reinforcement, and piles are anchored to the pile caps. (Commentary: Sec. A.5.3.8. Tier 2: Sec. 5.7.3.5)

C NC N/A U GIRDERS: Girders supported by walls or pilasters have at least two ties securing the anchor bolts unless provided with independent stiff wall anchors with adequate strength to resist the connection force calculated in the Quick Check procedure of Section 4.5.3.7. (Commentary: Sec. A.5.4.2. Tier 2: Sec. 5.7.4.2)

Project: _____ Location: _____

Completed by: _____ Date: _____

16.12IO IMMEDIATE OCCUPANCY STRUCTURAL CHECKLIST FOR BUILDING TYPES PC1: PRECAST OR TILT-UP CONCRETE SHEAR WALLS WITH FLEXIBLE DIAPHRAGMS AND PC1A: PRECAST OR TILT-UP CONCRETE SHEAR WALLS WITH STIFF DIAPHRAGMS

Very Low Seismicity

Foundation System

C NC N/A U DEEP FOUNDATIONS: Piles and piers are capable of transferring the lateral forces between the structure and the soil. (Commentary: Sec. A.6.2.3.)

C NC N/A U SLOPING SITES: The difference in foundation embedment depth from one side of the building to another shall not exceed one story high. (Commentary: Sec. A.6.2.4)

Connections

C NC N/A U WALL ANCHORAGE: Exterior concrete or masonry walls that are dependent on the diaphragm for lateral support are anchored for out-of-plane forces at each diaphragm level with steel anchors, reinforcing dowels, or straps that are developed into the diaphragm. Connections shall have adequate strength to resist the connection force calculated in the Quick Check procedure of Section 4.5.3.7. (Commentary: Sec. A.5.1.1. Tier 2: Sec. 5.7.1.1)

Seismic-Force-Resisting System

C NC N/A U REDUNDANCY: The number of lines of shear walls in each principal direction is greater than or equal to 2. (Commentary: Sec. A.3.2.1.1. Tier 2: Sec. 5.5.1.1)

C NC N/A U WALL SHEAR STRESS CHECK: The shear stress in the precast panels, calculated using the Quick Check procedure of Section 4.5.3.3, is less than the greater of 100 lb/in.^{2} or $2\sqrt{f_c'}$. (Commentary: Sec. A.3.2.3.1. Tier 2: Sec. 5.5.3.1.1)

C NC N/A U REINFORCING STEEL: The ratio of reinforcing steel area to gross concrete area is not less than 0.0012 in the vertical direction and 0.0020 in the horizontal direction. The spacing of reinforcing steel is equal to or less than 18 in. (Commentary: Sec. A.3.2.3.2. Tier 2: Sec. 5.5.3.1.3)

Diaphragms

C NC N/A U TOPPING SLAB: Precast concrete diaphragm elements are interconnected by a continuous reinforced concrete topping slab with a minimum thickness of 2 in. (Commentary: Sec. A.4.5.1. Tier 2: Sec. 5.6.4)

Connections

C NC N/A U WOOD LEDGERS: The connection between the wall panels and the diaphragm does not induce cross-grain bending or tension in the wood ledgers. (Commentary: Sec. A.5.1.2. Tier 2: Sec. 5.7.1.4)

C NC N/A U TRANSFER TO SHEAR WALLS: Diaphragms are connected for transfer of seismic forces to the shear walls, and the connections are able to develop the lesser of the shear strength of the walls or diaphragms. (Commentary: Sec. A.5.2.1. Tier 2: Sec. 5.7.2)

C NC N/A U TOPPING SLAB TO WALLS OR FRAMES: Reinforced concrete topping slabs that interconnect the precast concrete diaphragm elements are doweled for transfer of forces into the shear wall or frame elements, and the dowels are able to develop the least of the shear strength of the walls, frames, or slabs. (Commentary: Sec. A.5.2.3. Tier 2: Sec. 5.7.2)

C NC N/A U GIRDER–COLUMN CONNECTION: There is a positive connection using plates, connection hardware, or straps between the girder and the column support. (Commentary: Sec. A.5.4.1. Tier 2: Sec. 5.7.4.1)

Low, Moderate, and High Seismicity: Complete the Following Items in Addition to the Items for Very Low Seismicity.

Seismic-Force-Resisting System

C NC N/A U DEFLECTION COMPATIBILITY FOR RIGID DIAPHRAGMS: Secondary components shall have the shear capacity to develop the flexural strength of the components. (Commentary: Sec. A.3.1.6.2. Tier 2: Sec. 5.5.2.5.2)

C NC N/A U WALL OPENINGS: The total width of openings along any perimeter wall line constitutes less than 50% of the length of any perimeter wall when the wall piers have aspect ratios of less than 2-to-1. (Commentary: Sec. A.3.2.3.3. Tier 2: Sec. 5.5.3.3.1)

C NC N/A U PANEL-TO-PANEL CONNECTIONS: Adjacent wall panels are interconnected to transfer overturning forces between panels by methods other than welded steel inserts. (Commentary: Sec. A.3.2.3.4. Tier 2: Sec. 5.5.3.3.3)

C NC N/A U WALL THICKNESS: Thicknesses of bearing walls shall not be less than 1/25 the unsupported height or length, whichever is shorter, nor less than 4 in. (Commentary: Sec. A.3.2.3.5. Tier 2: Sec. 5.5.3.1.2)

Diaphragms

C NC N/A U CROSS TIES FOR FLEXIBLE DIAPHRAGMS: There are continuous cross ties between diaphragm chords. (Commentary: Sec. A.4.1.2. Tier 2: Sec. 5.6.1.2)

C NC N/A U PLAN IRREGULARITIES: There is tensile capacity to develop the strength of the diaphragm at reentrant corners or other locations of plan irregularities. (Commentary: Sec. A.4.1.7. Tier 2: Sec. 5.6.1.4)

C NC N/A U DIAPHRAGM REINFORCEMENT AT OPENINGS: There is reinforcing around all diaphragm openings larger than 50% of the building width in either major plan dimension. (Commentary: Sec. A.4.1.8. Tier 2: Sec. 5.6.1.5)

C NC N/A U STRAIGHT SHEATHING: All straight sheathed diaphragms have aspect ratios less than 1-to-1 in the direction being considered. (Commentary: Sec. A.4.2.1. Tier 2: Sec. 5.6.2)

C NC N/A U SPANS: All wood diaphragms with spans greater than 12 ft consist of wood structural panels or diagonal sheathing. (Commentary: Sec. A.4.2.2. Tier 2: Sec. 5.6.2)

C NC N/A U DIAGONALLY SHEATHED AND UNBLOCKED DIAPHRAGMS: All diagonally sheathed or unblocked wood structural panel diaphragms have horizontal spans less than 30 ft and aspect ratios less than or equal to 3-to-1. (Commentary: Sec. A.4.2.3. Tier 2: Sec. 5.6.2)

C NC N/A U OTHER DIAPHRAGMS: The diaphragm does not consist of a system other than wood, metal deck, concrete, or horizontal bracing. (Commentary: Sec. A.4.7.1. Tier 2: Sec. 5.6.5)

Connections

C NC N/A U MINIMUM NUMBER OF WALL ANCHORS PER PANEL: There are at least two anchors from each precast wall panel into the diaphragm elements. (Commentary: Sec. A.5.1.3. Tier 2: Sec. 5.7.1.4)

C NC N/A U PRECAST WALL PANELS: Precast wall panels are connected to the foundation, and the connections are able to develop the strength of the walls. (Commentary: Sec. A.5.3.6. Tier 2: Sec. 5.7.3.4)

C NC N/A U UPLIFT AT PILE CAPS: Pile caps shall have top reinforcement, and piles are anchored to the pile caps; the pile cap reinforcement and pile anchorage are able to develop the tensile capacity of the piles. (Commentary: Sec. A.5.3.8. Tier 2: Sec. 5.7.3.5)

C NC N/A U GIRDERS: Girders supported by walls or pilasters have at least two ties securing the anchor bolts unless provided with independent stiff wall anchors with adequate strength to resist the connection force calculated in the Quick Check procedure of Section 4.5.3.7. (Commentary: Sec. A.5.4.2. Tier 2: Sec. 5.7.4.2)

Project: _____ Location: _____

Completed by: _____ Date: _____

16.13LS LIFE SAFETY STRUCTURAL CHECKLIST FOR BUILDING TYPE PC2: PRECAST CONCRETE FRAMES WITH SHEAR WALLS

Low and Moderate Seismicity

Seismic-Force-Resisting System

C NC N/A U COMPLETE FRAMES: Steel or concrete frames classified as secondary components form a complete vertical-load-carrying system. (Commentary: Sec. A.3.3.1.6.1. Tier 2: Sec. 5.5.2.5.1)

C NC N/A U REDUNDANCY: The number of lines of shear walls in each principal direction is greater than or equal to 2. (Commentary: Sec. A.3.2.1.1. Tier 2: Sec. 5.5.1.1)

C NC N/A U SHEAR STRESS CHECK: The shear stress in the concrete shear walls, calculated using the Quick Check procedure of Section 4.5.3.3, is less than the greater of 100 lb/in.^{2} or $2\sqrt{f'_c}$. (Commentary: Sec. A.3.2.2.1. Tier 2: Sec. 5.5.3.1.1)

C NC N/A U REINFORCING STEEL: The ratio of reinforcing steel area to gross concrete area is not less than 0.0012 in the vertical direction and 0.0020 in the horizontal direction. (Commentary: Sec. A.3.2.2.2. Tier 2: Sec. 5.5.3.1.3)

Diaphragms

C NC N/A U TOPPING SLAB: Precast concrete diaphragm elements are interconnected by a continuous reinforced concrete topping slab with a minimum thickness of 2 in. (Commentary: Sec. A.4.5.1. Tier 2: Sec. 5.6.4)

Connections

C NC N/A U TRANSFER TO SHEAR WALLS: Diaphragms are connected for transfer of seismic forces to the shear walls. (Commentary: Sec. A.5.2.1. Tier 2: Sec. 5.7.2)

C NC N/A U TOPPING SLAB TO WALLS OR FRAMES: Reinforced concrete topping slabs that interconnect the precast concrete diaphragm elements are doweled for transfer of forces into the shear wall or frame elements. (Commentary: Sec. A.5.2.3. Tier 2: Sec. 5.7.2)

C NC N/A U FOUNDATION DOWELS: Wall reinforcement is doweled into the foundation. (Commentary: Sec. A.5.3.5. Tier 2: Sec. 5.7.3.4)

C NC N/A U GIRDER–COLUMN CONNECTION: There is a positive connection using plates, connection hardware, or straps between the girder and the column support. (Commentary: Sec. A.5.4.1. Tier 2: Sec. 5.7.4.1)

High Seismicity: Complete the Following Items in Addition to those for Low and Moderate Seismicity.

Seismic-Force-Resisting System

C NC N/A U PRECAST FRAMES: For buildings with concrete shear walls, precast concrete frame elements are not considered as primary components for resisting seismic forces. (Commentary: Sec. A.3.1.5.2. Tier 2: Sec. 5.5.2.4, 5.5.2.5.1 and 5.5.2.5.2)

C NC N/A U PRECAST CONNECTIONS: For buildings with concrete shear walls, the connection between precast frame elements, such as chords, ties, and collectors in the seismic-force-resisting system, develops the capacity of the connected members. (Commentary: Sec. A.3.1.5.3. Tier 2: Sec. 5.6.1.1)

C NC N/A U DEFLECTION COMPATIBILITY: Secondary components have the shear capacity to develop the flexural strength of the components. (Commentary: Sec. A.3.1.6.2. Tier 2: Sec. 5.5.2.5.2)

C NC N/A U COUPLING BEAMS: The stirrups in coupling beams over means of egress are spaced at or less than $d/2$ and are anchored into the confined core of the beam with hooks of 135 degrees or more. The ends of both walls to which the coupling beam is attached are supported at each end to resist vertical loads caused by overturning. (Commentary: Sec. A.3.2.2.3. Tier 2: Sec. 5.5.3.2.1)

Diaphragms

C NC N/A U OPENINGS AT SHEAR WALLS: Diaphragm openings immediately adjacent to the shear walls are less than 25% of the wall length. (Commentary: Sec. A.4.1.4. Tier 2: Sec. 5.5.3.3.1)

Connections

C NC N/A U UPLIFT AT PILE CAPS: Pile caps have top reinforcement, and piles are anchored to the pile caps. (Commentary: Sec. A.5.3.8. Tier 2: Sec. 5.7.3.5)

C NC N/A U CORBEL BEARING: If the frame girders bear on column corbels, the length of bearing is greater than 3 in. (Commentary: Sec. A.5.4.3. Tier 2: Sec. 5.7.4.3)

C NC N/A U CORBEL CONNECTIONS: The frame girders are not connected to corbels with welded elements. (Commentary: Sec. A.5.4.4. Tier 2: Sec. 5.7.4.3)

Project: _____ Location: _____

Completed by: _____ Date: _____

16.13IO IMMEDIATE OCCUPANCY STRUCTURAL CHECKLIST FOR BUILDING TYPE PC2: PRECAST CONCRETE FRAMES WITH SHEAR WALLS

Very Low Seismicity

Seismic-Force-Resisting System

C NC N/A U COMPLETE FRAMES: Steel or concrete frames classified as secondary components form a complete vertical-load-carrying system. (Commentary: Sec. A.3.3.1.6.1. Tier 2: Sec. 5.5.2.5.1)

C NC N/A U REDUNDANCY: The number of lines of shear walls in each principal direction is greater than or equal to 2. (Commentary: Sec. A.3.2.1.1. Tier 2: Sec. 5.5.1.1)

C NC N/A U SHEAR STRESS CHECK: The shear stress in the concrete shear walls, calculated using the Quick Check procedure of Section 4.5.3.3, is less than the greater of 100 lb/in.^{2} or $2\sqrt{f'_c}$. (Commentary: Sec. A.3.2.2.1. Tier 2: Sec. 5.5.3.1.1)

C NC N/A U REINFORCING STEEL: The ratio of reinforcing steel area to gross concrete area is not less than 0.0012 in the vertical direction and 0.0020 in the horizontal direction. The spacing of reinforcing steel is equal to or less than 18 in. (Commentary: Sec. A.3.2.2.2. Tier 2: Sec. 5.5.3.1.3)

Diaphragms

C NC N/A U TOPPING SLAB: Precast concrete diaphragm elements are interconnected by a continuous reinforced concrete topping slab with a minimum thickness of 2 in. (Commentary: Sec. A.4.5.1. Tier 2: Sec. 5.6.4)

Connections

C NC N/A U TRANSFER TO SHEAR WALLS: Diaphragms are connected for transfer of seismic forces to the shear walls, and the connections are able to develop the lesser of the shear strength of the walls or diaphragms. (Commentary: Sec. A.5.2.1. Tier 2: Sec. 5.7.2)

C NC N/A U TOPPING SLAB TO WALLS OR FRAMES: Reinforced concrete topping slabs that interconnect the precast concrete diaphragm elements is doweled for transfer of forces into the shear wall or frame elements, and the dowels are able to develop the least of the shear strength of the walls, frames, or slabs. (Commentary: Sec. A.5.2.3. Tier 2: Sec. 5.7.2)

C NC N/A U FOUNDATION DOWELS: Wall reinforcement is doweled into the foundation, and the dowels are able to develop the lesser of the strength of the walls or the uplift capacity of the foundation. (Commentary: Sec. A.5.3.5. Tier 2: Sec. 5.7.3.4)

C NC N/A U GIRDER–COLUMN CONNECTION: There is a positive connection using plates, connection hardware, or straps between the girder and the column support. (Commentary: Sec. A.5.4.1. Tier 2: Sec. 5.7.4.1)

Low, Moderate, and High Seismicity: Complete the Following Items in Addition to those for Very Low Seismicity.

Seismic-Force-Resisting System

C NC N/A U PRECAST FRAMES: For buildings with concrete shear walls, precast concrete frame elements are not considered as primary components for resisting seismic forces. (Commentary: Sec. A.3.1.5.2. Tier 2: Sec. 5.5.2.4, 5.5.2.5.1 and 5.5.2.5.2)

C NC N/A U PRECAST CONNECTIONS: For buildings with concrete shear walls, the connection between precast frame elements, such as chords, ties, and collectors in the seismic-force-resisting system, develops the capacity of the connected members. (Commentary: Sec. A.3.1.5.3. Tier 2: Sec. 5.6.1.1)

C NC N/A U DEFLECTION COMPATIBILITY: Secondary components shall have the shear capacity to develop the flexural strength of the components. (Commentary: Sec. A.3.1.6.2. Tier 2: Sec. 5.5.2.5.2)

C NC N/A U COUPLING BEAMS: The stirrups in coupling beams over means of egress are spaced at or less than $d/2$ and are anchored into the confined core of the beam with hooks of 135 degrees or more. All coupling beams shall comply with the requirements above and shall have the capacity in shear to develop the uplift capacity of the adjacent wall. (Commentary: Sec. A.3.2.2.3. Tier 2: Sec. 5.5.3.2.1)

C NC N/A U OVERTURNING: All shear walls have aspect ratios less than 4-to-1. Wall piers need not be considered. (Commentary: Sec. A.3.2.2.4. Tier 2: Sec. 5.5.3.1.4)

C NC N/A U CONFINEMENT REINFORCING: For shear walls with aspect ratios greater than 2-to-1, the boundary elements are confined with spirals or ties with spacing less than $8d_b$. (Commentary: Sec. A.3.2.2.5. Tier 2: Sec. 5.5.3.2.2)

C NC N/A U WALL REINFORCING AT OPENINGS: There is added trim reinforcement around all wall openings with a dimension greater than three times the thickness of the wall. (Commentary: Sec. A.3.2.2.6. Tier 2: Sec. 5.5.3.1.5)

C NC N/A U WALL THICKNESS: Thickness of bearing walls is not less than 1/25 the unsupported height or length, whichever is shorter, nor less than 4 in. (Commentary: Sec. A.3.2.3.5. Tier 2: Sec. 5.5.3.1.2)

Diaphragms

C NC N/A U OPENINGS AT SHEAR WALLS: Diaphragm openings immediately adjacent to the shear walls are less than 15% of the wall length. (Commentary: Sec. A.4.1.4. Tier 2: Sec. 5.5.3.2.1)

C NC N/A U PLAN IRREGULARITIES: There is tensile capacity to develop the strength of the diaphragm at reentrant corners or other locations of plan irregularities. (Commentary: Sec. A.4.1.7. Tier 2: Sec. 5.6.1.4)

C NC N/A U DIAPHRAGM REINFORCEMENT AT OPENINGS: There is reinforcing around all diaphragm openings larger than 50% of the building width in either major plan dimension. (Commentary: Sec. A.4.1.8. Tier 2: Sec. 5.6.1.5)

Connections

C NC N/A U UPLIFT AT PILE CAPS: Pile caps have top reinforcement, and piles are anchored to the pile caps; the pile cap reinforcement and pile anchorage are able to develop the tensile capacity of the piles. (Commentary: Sec. A.5.3.8. Tier 2: Sec. 5.7.3.5)

C NC N/A U CORBEL BEARING: If the frame girders bear on column corbels, the length of bearing is greater than 3 in. (Commentary: Sec. A.5.4.3. Tier 2: Sec. 5.7.4.3)

C NC N/A U CORBEL CONNECTIONS: The frame girders are not connected to corbels with welded elements. (Commentary: Sec. A.5.4.4. Tier 2: Sec. 5.7.4.3)

Project: _____ Location: _____

Completed by: _____ Date: _____

16.14LS LIFE SAFETY STRUCTURAL CHECKLIST FOR BUILDING TYPE PC2A: PRECAST CONCRETE FRAMES WITHOUT SHEAR WALLS

Low and Moderate Seismicity

Seismic-Force-Resisting System

C NC N/A U REDUNDANCY: The number of lines of moment frames in each principal direction is greater than or equal to 2. The number of bays of moment frames in each line is greater than or equal to 2. (Commentary: Sec. A.3.1.1.1. Tier 2: Sec. 5.5.1.1)

C NC N/A U COLUMN SHEAR STRESS CHECK: The shear stress in the concrete columns, calculated using the Quick Check procedure of Section 4.5.3.2, is less than the greater of 100 lb/in.^{2} or $2\sqrt{f_c'}$. (Commentary: Sec. A.3.1.4.1. Tier 2: Sec. 5.5.2.3.4)

C NC N/A U COLUMN AXIAL STRESS CHECK: The axial stress caused by gravity loads in columns subjected to overturning forces is less than $0.10f_c'$. Alternatively, the axial stress caused by overturning forces alone, calculated using the Quick Check procedure of Section 4.5.3.6, is less than $0.30f_c'$. (Commentary: Sec. A.3.1.4.2. Tier 2: Sec. 5.5.2.1.3)

C NC N/A U PRECAST CONNECTION CHECK: The precast connections at frame joints have the capacity to resist the shear and moment demands calculated using the Quick Check procedure of Section 4.5.3.5. (Commentary: Sec. A.3.1.5.1. Tier 2: Sec. 5.5.2.4)

Diaphragms

C NC N/A U TOPPING SLAB: Precast concrete diaphragm elements are interconnected by a continuous reinforced concrete topping slab with a minimum thickness of 2 in. (Commentary: Sec. A.4.5.1. Tier 2: Sec. 5.6.4)

Connections

C NC N/A U TOPPING SLAB TO WALLS OR FRAMES: Reinforced concrete topping slabs that interconnect the precast concrete diaphragm elements are doweled for transfer of forces into the shear wall or frame elements, and the dowels are able to develop the least of the shear strength of the walls, frames, or slabs. (Commentary: Sec. A.5.2.3. Tier 2: Sec. 5.7.2)

C NC N/A U GIRDER–COLUMN CONNECTION: There is a positive connection using plates, connection hardware, or straps between the girder and the column support. (Commentary: Sec. A.5.4.1. Tier 2: Sec. 5.7.4.1)

High Seismicity: Complete the Following Items in Addition to those for Low and Moderate Seismicity.

Seismic-Force-Resisting System

C NC N/A U PRESTRESSED FRAME ELEMENTS: The seismic-force-resisting frames do not include any prestressed or posttensioned elements where the average prestress exceeds the lesser of 700 lb/in.^{2} or $f_c'/6$ at potential hinge locations. The average prestress is calculated in accordance with the Quick Check procedure of Section 4.5.3.8. (Commentary: Sec. A.3.1.4.4. Tier 2: Sec. 5.5.2.3.2)

C NC N/A U CAPTIVE COLUMNS: There are no columns at a level with height/depth ratios less than 50% of the nominal height/depth ratio of the typical columns at that level. (Commentary: Sec. A.3.1.4.5. Tier 2: Sec. 5.5.2.3.3)

C NC N/A U JOINT REINFORCING: Beam–column joints have ties spaced at or less than $8d_b$. (Commentary: Sec. A.3.1.4.13. Tier 2: Sec. 5.5.2.3.8)

C NC N/A U DEFLECTION COMPATIBILITY: Secondary components have the shear capacity to develop the flexural strength of the components. (Commentary: Sec. A.3.1.6.2. Tier 2: Sec. 5.5.2.5.2)

Connections

C NC N/A U UPLIFT AT PILE CAPS: Pile caps have top reinforcement, and piles are anchored to the pile caps. (Commentary: Sec. A.5.3.8. Tier 2: Sec. 5.7.3.5)

C NC N/A U GIRDERS: Girders supported by walls or pilasters have at least two ties securing the anchor bolts unless provided with independent stiff wall anchors with adequate strength to resist the connection force calculated in the Quick Check procedure of Section 4.5.3.7. (Commentary: Sec. A.5.4.2. Tier 2: Sec. 5.7.4.1)

C NC N/A U CORBEL BEARING: If the frame girders bear on column corbels, the length of bearing is greater than 3 in. (Commentary: Sec. A.5.4.3. Tier 2: Sec. 5.7.4.3)

C NC N/A U CORBEL CONNECTIONS: The frame girders are not connected to corbels with welded elements. (Commentary: Sec. A.5.4.4. Tier 2: Sec. 5.7.4.3)

Project: _____ Location: _____

Completed by: _____ Date: _____

16.14IO IMMEDIATE OCCUPANCY STRUCTURAL CHECKLIST FOR BUILDING TYPE PC2A: PRECAST CONCRETE FRAMES WITHOUT SHEAR WALLS

Very Low Seismicity

Seismic-Force-Resisting System

C NC N/A U REDUNDANCY: The number of lines of moment frames in each principal direction is greater than or equal to 2. The number of bays of moment frames in each line is greater than or equal to 3. (Commentary: Sec. A.3.1.1.1. Tier 2: Sec. 5.5.1.1)

C NC N/A U COLUMN SHEAR STRESS CHECK: The shear stress in the concrete columns, calculated using the Quick Check procedure of Section 4.5.3.2, is less than the greater of 100 lb/in.^{2} or $2\sqrt{f_c'}$. (Commentary: Sec. A.3.1.4.1. Tier 2: Sec. 5.5.2.3.4)

C NC N/A U COLUMN AXIAL STRESS CHECK: The axial stress caused by gravity loads in columns subjected to overturning forces is less than $0.10f_c'$. Alternatively, the axial stresses caused by overturning forces alone, calculated using the Quick Check procedure of Section 4.5.3.6, is less than $0.30f_c'$. (Commentary: Sec. A.3.1.4.2. Tier 2: Sec. 5.5.2.1.3)

C NC N/A U PRECAST CONNECTION CHECK: The precast connections at frame joints have the capacity to resist the shear and moment demands calculated using the Quick Check procedure of Section 4.5.3.5. (Commentary: Sec. A.3.1.5.1. Tier 2: Sec. 5.5.2.4)

Diaphragms

C NC N/A U TOPPING SLAB: Precast concrete diaphragm elements are interconnected by a continuous reinforced concrete topping slab with a minimum thickness of 2 in. (Commentary: Sec. A.4.5.1. Tier 2: Sec. 5.6.4)

Connections

C NC N/A U TOPPING SLAB TO WALLS OR FRAMES: Reinforced concrete topping slabs that interconnect the precast concrete diaphragm elements are doweled for transfer of forces into the shear wall or frame elements, and the dowels are able to develop the least of the shear strength of the walls, frames, or slabs. (Commentary: Sec. A.5.2.3. Tier 2: Sec. 5.7.2)

C NC N/A U GIRDER–COLUMN CONNECTION: There is a positive connection using plates, connection hardware, or straps between the girder and the column support. (Commentary: Sec. A.5.4.1. Tier 2: Sec. 5.7.4.1)

Low, Moderate, and High Seismicity: Complete the Following Items in Addition to those for Very Low Seismicity.

Seismic-Force-Resisting System

C NC N/A U PRESTRESSED FRAME ELEMENTS: The seismic-force-resisting frames do not include any prestressed or posttensioned elements where the average prestress exceeds the lesser of 700 lb/in.^{2} or $f_c'/6$ at potential hinge locations. The average prestress is calculated in accordance with the Quick Check procedure of Section 4.5.3.8. (Commentary: Sec. A.3.1.4.4. Tier 2: Sec. 5.5.2.3.2)

C NC N/A U CAPTIVE COLUMNS: There are no columns at a level with height/depth ratios less than 75% of the nominal height/depth ratio of the typical columns at that level. (Commentary: Sec. A.3.1.4.5. Tier 2: Sec. 5.5.2.3.3)

C NC N/A U JOINT REINFORCING: Beam–column joints have ties spaced at or less than $8d_b$. (Commentary: Sec. A.3.1.4.13. Tier 2: Sec. 5.5.2.3.8)

C NC N/A U DEFLECTION COMPATIBILITY: Secondary components shall have the shear capacity to develop the flexural strength of the components. (Commentary: Sec. A.3.1.6.2. Tier 2: Sec. 5.5.2.5.2)

Diaphragms

C NC N/A U PLAN IRREGULARITIES: There is tensile capacity to develop the strength of the diaphragm at reentrant corners or other locations of plan irregularities. (Commentary: Sec. A.4.1.7. Tier 2: Sec. 5.6.1.4)

C NC N/A U DIAPHRAGM REINFORCEMENT AT OPENINGS: There is reinforcing around all diaphragm openings larger than 50% of the building width in either major plan dimension. (Commentary: Sec. A.4.1.8. Tier 2: Sec. 5.6.1.5)

Connections

C NC N/A U UPLIFT AT PILE CAPS: Pile caps have top reinforcement, and piles are anchored to the pile caps; the pile cap reinforcement and pile anchorage are able to develop the tensile capacity of the piles. (Commentary: Sec. A.5.3.8. Tier 2: Sec. 5.7.3.5)

C NC N/A U GIRDERS: Girders supported by frames have at least two ties securing the anchor bolts unless provided with independent stiff wall anchors with adequate strength to resist the connection force calculated in the Quick Check procedure of Section 4.5.3.7. (Commentary: Sec. A.5.4.2. Tier 2: Sec. 5.7.4.1)

C NC N/A U CORBEL BEARING: If the frame girders bear on column corbels, the length of bearing is greater than 3 in. (Commentary: Sec. A.5.4.3. Tier 2: Sec. 5.7.4.3)

C NC N/A U CORBEL CONNECTIONS: The frame girders are not connected to corbels with welded elements. (Commentary: Sec. A.5.4.4. Tier 2: Sec. 5.7.4.3)

C NC N/A U TRANSFER TO FRAMES: Diaphragms are connected for transfer of loads to the frames. (Commentary: Sec. A.5.2.1. Tier 2: Sec. 5.7.2)

Project: _____ Location: _____

Completed by: _____ Date: _____

16.15LS LIFE SAFETY STRUCTURAL CHECKLIST FOR BUILDING TYPES RM1: REINFORCED MASONRY BEARING WALLS WITH FLEXIBLE DIAPHRAGMS AND RM2: REINFORCED MASONRY BEARING WALLS WITH STIFF DIAPHRAGMS

Low and Moderate Seismicity

Seismic-Force-Resisting System

C NC N/A U REDUNDANCY: The number of lines of shear walls in each principal direction is greater than or equal to 2. (Commentary: Sec. A.3.2.1.1. Tier 2: Sec. 5.5.1.1)

C NC N/A U SHEAR STRESS CHECK: The shear stress in the reinforced masonry shear walls, calculated using the Quick Check procedure of Section 4.5.3.3, is less than 70 lb/in.^{2}. (Commentary: Sec. A.3.2.4.1. Tier 2: Sec. 5.5.3.1.1)

C NC N/A U REINFORCING STEEL: The total vertical and horizontal reinforcing steel ratio in reinforced masonry walls is greater than 0.002 of the wall with the minimum of 0.0007 in either of the two directions; the spacing of reinforcing steel is less than 48 in., and all vertical bars extend to the top of the walls. (Commentary: Sec. A.3.2.4.2. Tier 2: Sec. 5.5.3.1.3)

Stiff Diaphragms

C NC N/A U TOPPING SLAB: Precast concrete diaphragm elements are interconnected by a continuous reinforced concrete topping slab. (Commentary: Sec. A.4.5.1. Tier 2: Sec. 5.6.4)

Connections

C NC N/A U WALL ANCHORAGE: Exterior concrete or masonry walls that are dependent on the diaphragm for lateral support are anchored for out-of-plane forces at each diaphragm level with steel anchors, reinforcing dowels, or straps that are developed into the diaphragm. Connections shall have adequate strength to resist the connection force calculated in the Quick Check procedure of Section 4.5.3.7. (Commentary: Sec. A.5.1.1. Tier 2: Sec. 5.7.1.1)

C NC N/A U WOOD LEDGERS: The connection between the wall panels and the diaphragm does not induce cross-grain bending or tension in the wood ledgers. (Commentary: Sec. A.5.1.2. Tier 2: Sec. 5.7.1.3)

C NC N/A U TRANSFER TO SHEAR WALLS: Diaphragms are connected for transfer of seismic forces to the shear walls. (Commentary: Sec. A.5.2.1. Tier 2: Sec. 5.7.2)

C NC N/A U TOPPING SLAB TO WALLS OR FRAMES: Reinforced concrete topping slabs that interconnect the precast concrete diaphragm elements are doweled for transfer of forces into the shear wall or frame elements. (Commentary: Sec. A.5.2.3. Tier 2: Sec. 5.7.2)

C NC N/A U FOUNDATION DOWELS: Wall reinforcement is doweled into the foundation. (Commentary: Sec. A.5.3.5. Tier 2: Sec. 5.7.3.4)

C NC N/A U GIRDER–COLUMN CONNECTION: There is a positive connection using plates, connection hardware, or straps between the girder and the column support. (Commentary: Sec. A.5.4.1. Tier 2: Sec. 5.7.4.1)

High Seismicity: Complete the Following Items in Addition to the Items for Low and Moderate Seismicity.

Stiff Diaphragms

C NC N/A U OPENINGS AT SHEAR WALLS: Diaphragm openings immediately adjacent to the shear walls are less than 25% of the wall length. (Commentary: Sec. A.4.1.4. Tier 2: Sec. 5.6.1.3)

C NC N/A U OPENINGS AT EXTERIOR MASONRY SHEAR WALLS: Diaphragm openings immediately adjacent to exterior masonry shear walls are not greater than 8 ft long. (Commentary: Sec. A.4.1.6. Tier 2: Sec. 5.6.1.3)

Flexible Diaphragms

C NC N/A U CROSS TIES: There are continuous cross ties between diaphragm chords. (Commentary: Sec. A.4.1.2. Tier 2: Sec. 5.6.1.2)

C NC N/A U OPENINGS AT SHEAR WALLS: Diaphragm openings immediately adjacent to the shear walls are less than 25% of the wall length. (Commentary: Sec. A.4.1.4. Tier 2: Sec. 5.6.1.3)

C NC N/A U OPENINGS AT EXTERIOR MASONRY SHEAR WALLS: Diaphragm openings immediately adjacent to exterior masonry shear walls are not greater than 8 ft long. (Commentary: Sec. A.4.1.6. Tier 2: Sec. 5.6.1.3)

C NC N/A U STRAIGHT SHEATHING: All straight sheathed diaphragms have aspect ratios less than 2-to-1 in the direction being considered. (Commentary: Sec. A.4.2.1. Tier 2: Sec. 5.6.2)

C NC N/A U SPANS: All wood diaphragms with spans greater than 24 ft consist of wood structural panels or diagonal sheathing. (Commentary: Sec. A.4.2.2. Tier 2: Sec. 5.6.2)

C NC N/A U DIAGONALLY SHEATHED AND UNBLOCKED DIAPHRAGMS: All diagonally sheathed or unblocked wood structural panel diaphragms have horizontal spans less than 40 ft and aspect ratios less than or equal to 4-to-1. (Commentary: Sec. A.4.2.3. Tier 2: Sec. 5.6.2)

C NC N/A U OTHER DIAPHRAGMS: The diaphragm shall not consist of a system other than wood, metal deck, concrete, or horizontal bracing. (Commentary: Sec. A.4.7.1. Tier 2: Sec. 5.6.5)

Connections

C NC N/A U STIFFNESS OF WALL ANCHORS: Anchors of concrete or masonry walls to wood structural elements are installed taut and are stiff enough to limit the relative movement between the wall and the diaphragm to no greater than 1/8 in. before engagement of the anchors. (Commentary: Sec. A.5.1.4. Tier 2: Sec. 5.7.1.2)

Project: _____ Location: _____

Completed by: _____ Date: _____

16.15IO IMMEDIATE OCCUPANCY STRUCTURAL CHECKLIST FOR BUILDING TYPES RM1: REINFORCED MASONRY BEARING WALLS AND RM1A: REINFORCED MASONRY BEARING WALLS WITH STIFF DIAPHRAGMS

Very Low Seismicity

Seismic-Force-Resisting System

C NC N/A U REDUNDANCY: The number of lines of shear walls in each principal direction is greater than or equal to 2. (Commentary: Sec. A.3.2.1.1. Tier 2: Sec. 5.5.1.1)

C NC N/A U SHEAR STRESS CHECK: The shear stress in the reinforced masonry shear walls, calculated using the Quick Check procedure of Section 4.5.3.3, is less than 70 lb/in.^{2}. (Commentary: Sec. A.3.2.4.1. Tier 2: Sec. 5.5.3.1.1)

C NC N/A U REINFORCING STEEL: The total vertical and horizontal reinforcing steel ratio in reinforced masonry walls is greater than 0.002 of the wall with the minimum of 0.0007 in either of the two directions; the spacing of reinforcing steel is less than 48 in., and all vertical bars extend to the top of the walls. (Commentary: Sec. A.3.2.4.2. Tier 2: Sec. 5.5.3.1.3)

Connections

C NC N/A U WOOD LEDGERS: The connection between the wall panels and the diaphragm does not induce cross-grain bending or tension in the wood ledgers. (Commentary: Sec. A.5.1.2. Tier 2: Sec. 5.7.1.3)

C NC N/A U TRANSFER TO SHEAR WALLS: Diaphragms are connected for transfer of seismic forces to the shear walls, and the connections are able to develop the lesser of the shear strength of the walls or diaphragms. (Commentary: Sec. A.5.2.1. Tier 2: Sec. 5.7.2)

C NC N/A U FOUNDATION DOWELS: Wall reinforcement is doweled into the foundation, and the dowels are able to develop the lesser of the strength of the walls or the uplift capacity of the foundation. (Commentary: Sec. A.5.3.5. Tier 2: Sec. 5.7.3.4)

C NC N/A U GIRDER–COLUMN CONNECTION: There is a positive connection using plates, connection hardware, or straps between the girder and the column support. (Commentary: Sec. A.5.4.1. Tier 2: Sec. 5.7.4.1)

C NC N/A U WALL ANCHORAGE: Exterior concrete or masonry walls that are dependent on the diaphragm for lateral support are anchored for out-of-plane forces at each diaphragm level with steel anchors, reinforcing dowels, or straps that are developed into the diaphragm. Connections shall have adequate strength to resist the connection force calculated in the Quick Check procedure of Section 4.5.3.7. (Commentary: Sec. A.5.1.1. Tier 2: Sec. 5.7.1.1)

Stiff Diaphragms

C NC N/A U TOPPING SLAB: Precast concrete diaphragm elements are interconnected by a continuous reinforced concrete topping slab. (Commentary: Sec. A.4.5.1. Tier 2: Sec. 5.6.4)

C NC N/A U TOPPING SLAB TO WALLS OR FRAMES: Reinforced concrete topping slabs that interconnect the precast concrete diaphragm elements are doweled for transfer of forces into the shear wall or frame elements. (Commentary: Sec. A.5.2.3. Tier 2: Sec. 5.7.2)

Foundation System

C NC N/A U DEEP FOUNDATIONS: Piles and piers are capable of transferring the lateral forces between the structure and the soil. (Commentary: Sec. A.6.2.3)

C NC N/A U SLOPING SITES: The difference in foundation embedment depth from one side of the building to another shall not exceed one story high. (Commentary: Sec. A.6.2.4)

Low, Moderate, and High Seismicity: Complete the Following Items in Addition to the Items for Very Low Seismicity.

Seismic-Force-Resisting System

C NC N/A U REINFORCING AT WALL OPENINGS: All wall openings that interrupt rebar have trim reinforcing on all sides. (Commentary: Sec. A.3.2.4.3. Tier 2: Sec. 5.5.3.1.5)

C NC N/A U PROPORTIONS: The height-to-thickness ratio of the shear walls at each story is less than 30. (Commentary: Sec. A.3.2.4.4. Tier 2: Sec. 5.5.3.1.2)

Diaphragms (Stiff or Flexible)

C NC N/A U OPENINGS AT SHEAR WALLS: Diaphragm openings immediately adjacent to the shear walls are less than 15% of the wall length. (Commentary: Sec. A.4.1.4. Tier 2: Sec. 5.6.1.3)

C NC N/A U OPENINGS AT EXTERIOR MASONRY SHEAR WALLS: Diaphragm openings immediately adjacent to exterior masonry shear walls are not greater than 4 ft long. (Commentary: Sec. A.4.1.6. Tier 2: Sec. 5.6.1.3)

C NC N/A U PLAN IRREGULARITIES: There is tensile capacity to develop the strength of the diaphragm at reentrant corners or other locations of plan irregularities. (Commentary: Sec. A.4.1.7. Tier 2: Sec. 5.6.1.4)

C NC N/A U DIAPHRAGM REINFORCEMENT AT OPENINGS: There is reinforcing around all diaphragm openings larger than 50% of the building width in either major plan dimension. (Commentary: Sec. A.4.1.8. Tier 2: Sec. 5.6.1.5)

Flexible Diaphragms

C NC N/A U CROSS TIES: There are continuous cross ties between diaphragm chords. (Commentary: Sec. A.4.1.2. Tier 2: Sec. 5.6.1.2)

C NC N/A U STRAIGHT SHEATHING: All straight sheathed diaphragms have aspect ratios less than 1-to-1 in the direction being considered. (Commentary: Sec. A.4.2.1. Tier 2: Sec. 5.6.2)

C NC N/A U SPANS: All wood diaphragms with spans greater than 12 ft consist of wood structural panels or diagonal sheathing. (Commentary: Sec. A.4.2.2. Tier 2: Sec. 5.6.2)

C NC N/A U DIAGONALLY SHEATHED AND UNBLOCKED DIAPHRAGMS: All diagonally sheathed or unblocked wood structural panel diaphragms have horizontal spans less than 30 ft and aspect ratios less than or equal to 3-to-1. (Commentary: Sec. A.4.2.2. Tier 2: Sec. 5.6.2)

C NC N/A U NONCONCRETE FILLED DIAPHRAGMS: Untopped metal deck diaphragms or metal deck diaphragms with fill other than concrete consist of horizontal spans of less than 40 ft and have aspect ratios less than 4-to-1. (Commentary: Sec. A.4.3.1. Tier 2: Sec. 5.6.3)

C NC N/A U OTHER DIAPHRAGMS: The diaphragm does not consist of a system other than wood, metal deck, concrete, or horizontal bracing. (Commentary: Sec. A.4.7.1. Tier 2: Sec. 5.6.5)

Connections

C NC N/A U STIFFNESS OF WALL ANCHORS: Anchors of concrete or masonry walls to wood structural elements are installed taut and are stiff enough to limit the relative movement between the wall and the diaphragm to no greater than 1/8 in. before engagement of the anchors. (Commentary: Sec. A.5.1.4. Tier 2: Sec. 5.7.1.2)

Project: _____ Location: _____

Completed by: _____ Date: _____

16.16LS LIFE SAFETY STRUCTURAL CHECKLIST FOR BUILDING TYPES URM: UNREINFORCED MASONRY BEARING WALLS WITH FLEXIBLE DIAPHRAGMS AND URMA: UNREINFORCED MASONRY BEARING WALLS WITH STIFF DIAPHRAGMS

Low and Moderate Seismicity

Seismic-Force-Resisting System

C NC N/A U REDUNDANCY: The number of lines of shear walls in each principal direction is greater than or equal to 2. (Commentary: Sec. A.3.2.1.1. Tier 2: Sec. 5.5.1.1)

C NC N/A U SHEAR STRESS CHECK: The shear stress in the unreinforced masonry shear walls, calculated using the Quick Check procedure of Section 4.5.3.3, is less than 30 lb/in.^{2} for clay units and 70 lb/in.^{2} for concrete units. (Commentary: Sec. A.3.2.5.1. Tier 2: Sec. 5.5.3.1.1)

Connections

C NC N/A U WALL ANCHORAGE: Exterior concrete or masonry walls that are dependent on the diaphragm for lateral support are anchored for out-of-plane forces at each diaphragm level with steel anchors, reinforcing dowels, or straps that are developed into the diaphragm. Connections shall have adequate strength to resist the connection force calculated in the Quick Check procedure of Section 4.5.3.7. (Commentary: Sec. A.5.1.1. Tier 2: Sec. 5.7.1.1)

C NC N/A U WOOD LEDGERS: The connection between the wall panels and the diaphragm does not induce cross-grain bending or tension in the wood ledgers. (Commentary: Sec. A.5.1.2. Tier 2: Sec. 5.7.1.3)

C NC N/A U TRANSFER TO SHEAR WALLS: Diaphragms are connected for transfer of seismic forces to the shear walls. (Commentary: Sec. A.5.2.1. Tier 2: Sec. 5.7.2)

C NC N/A U GIRDER–COLUMN CONNECTION: There is a positive connection using plates, connection hardware, or straps between the girder and the column support. (Commentary: Sec. A.5.4.1. Tier 2: Sec. 5.7.4.1)

High Seismicity: Complete the Following Items in Addition to the Items for Low and Moderate Seismicity.

Seismic-Force-Resisting System

C NC N/A U PROPORTIONS: The height-to-thickness ratio of the shear walls at each story is less than the following (Commentary: Sec. A.3.2.5.2. Tier 2: Sec. 5.5.3.1.2):

Top story of multi-story building	9
First story of multi-story building	15
All other conditions	13

C NC N/A U MASONRY LAYUP: Filled collar joints of multi-wythe masonry walls have negligible voids. (Commentary: Sec. A.3.2.5.3. Tier 2: Sec. 5.5.3.4.1)

Diaphragms (Stiff or Flexible)

C NC N/A U OPENINGS AT SHEAR WALLS: Diaphragm openings immediately adjacent to the shear walls are less than 25% of the wall length. (Commentary: Sec. A.4.1.4. Tier 2: Sec. 5.6.1.3)

C NC N/A U OPENINGS AT EXTERIOR MASONRY SHEAR WALLS: Diaphragm openings immediately adjacent to exterior masonry shear walls are not greater than 8 ft long. (Commentary: Sec. A.4.1.6. Tier 2: Sec. 5.6.1.3)

Flexible Diaphragms

C NC N/A U CROSS TIES: There are continuous cross ties between diaphragm chords. (Commentary: Sec. A.4.1.2. Tier 2: Sec. 5.6.1.2)

C NC N/A U STRAIGHT SHEATHING: All straight sheathed diaphragms have aspect ratios less than 2-to-1 in the direction being considered. (Commentary: Sec. A.4.2.1. Tier 2: Sec. 5.6.2)

C NC N/A U SPANS: All wood diaphragms with spans greater than 24 ft consist of wood structural panels or diagonal sheathing. (Commentary: Sec. A.4.2.2. Tier 2: Sec. 5.6.2)

C NC N/A U DIAGONALLY SHEATHED AND UNBLOCKED DIAPHRAGMS: All diagonally sheathed or unblocked wood structural panel diaphragms have horizontal spans less than 40 ft and aspect ratios less than or equal to 4-to-1. (Commentary: Sec. A.4.2.3. Tier 2: Sec. 5.6.2)

C NC N/A U OTHER DIAPHRAGMS: The diaphragm does not consist of a system other than wood, metal deck, concrete, or horizontal bracing. (Commentary: Sec. A.4.7.1. Tier 2: Sec. 5.6.5)

Connections

C NC N/A U STIFFNESS OF WALL ANCHORS: Anchors of concrete or masonry walls to wood structural elements are installed taut and are stiff enough to limit the relative movement between the wall and the diaphragm to no greater than 1/8 in. before engagement of the anchors. (Commentary: Sec. A.5.1.4. Tier 2: Sec. 5.7.1.2)

C NC N/A U BEAM, GIRDER, AND TRUSS SUPPORTS: Beams, girders, and trusses supported by unreinforced masonry walls or pilasters have independent secondary columns for support of vertical loads. (Commentary: Sec. A.5.4.5. Tier 2: Sec. 5.7.4.4)

Project: _____ Location: _____

Completed by: _____ Date: _____

16.16IO IMMEDIATE OCCUPANCY STRUCTURAL CHECKLIST FOR BUILDING TYPES URM: UNREINFORCED MASONRY BEARING WALLS WITH FLEXIBLE DIAPHRAGMS AND URMA: UNREINFORCED MASONRY BEARING WALLS WITH STIFF DIAPHRAGMS

Very Low Seismicity

Seismic-Force-Resisting System

C NC N/A U REDUNDANCY: The number of lines of shear walls in each principal direction is greater than or equal to 2. (Commentary: Sec. A.3.2.1.1. Tier 2: Sec. 5.5.1.1)

C NC N/A U SHEAR STRESS CHECK: The shear stress in the unreinforced masonry shear walls, calculated using the Quick Check procedure of Section 4.5.3.3, is less than 30 lb/in.^{2} for clay units and 70 lb/in.^{2} for concrete units. (Commentary: Sec. A.3.2.5.1. Tier 2: Sec. 5.5.3.1.1)

Connections

C NC N/A U WALL ANCHORAGE: Exterior concrete or masonry walls that are dependent on the diaphragm for lateral support are anchored for out-of-plane forces at each diaphragm level with steel anchors, reinforcing dowels, or straps that are developed into the diaphragm. Connections shall have adequate strength to resist the connection force calculated in the Quick Check procedure of Section 4.5.3.7. (Commentary: Sec. A.5.1.1. Tier 2: Sec. 5.7.1.1)

C NC N/A U WOOD LEDGERS: The connection between the wall panels and the diaphragm does not induce cross-grain bending or tension in the wood ledgers. (Commentary: Sec. A.5.1.2. Tier 2: Sec. 5.7.1.3)

C NC N/A U TRANSFER TO SHEAR WALLS: Diaphragms are connected for transfer of seismic forces to the shear walls. (Commentary: Sec. A.5.2.1. Tier 2: Sec. 5.7.2)

C NC N/A U GIRDER–COLUMN CONNECTION: There is a positive connection using plates, connection hardware, or straps between the girder and the column support. (Commentary: Sec. A.5.4.1. Tier 2: Sec. 5.7.4.1)

Foundation System

C NC N/A U DEEP FOUNDATIONS: Piles and piers are capable of transferring the lateral forces between the structure and the soil. (Commentary: Sec. A.6.2.3.)

C NC N/A U SLOPING SITES: The difference in foundation embedment depth from one side of the building to another shall not exceed one story high. (Commentary: Sec. A.6.2.4)

Low, Moderate, and High Seismicity: Complete the Following Items in Addition to the Items for Very Low Seismicity.

Seismic-Force-Resisting System

C NC N/A U PROPORTIONS: The height-to-thickness ratio of the shear walls at each story is less than the following (Commentary: Sec. A.3.2.5.2. Tier 2: Sec. 5.5.3.1.2):

Top story of multi-story building	9
First story of multi-story building	15
All other conditions	13

C NC N/A U MASONRY LAYUP: Filled collar joints of multi-wythe masonry walls have negligible voids. (Commentary: Sec. A.3.2.5.3. Tier 2: Sec. 5.5.3.4.1)

Diaphragms (Stiff or Flexible)

C NC N/A U OPENINGS AT SHEAR WALLS: Diaphragm openings immediately adjacent to the shear walls are less than 15% of the wall length. (Commentary: Sec. A.4.1.4. Tier 2: Sec. 5.6.1.3)

C NC N/A U OPENINGS AT EXTERIOR MASONRY SHEAR WALLS: Diaphragm openings immediately adjacent to exterior masonry shear walls are be greater than 4 ft long. (Commentary: Sec. A.4.1.6. Tier 2: Sec. 5.6.1.3)

C NC N/A U PLAN IRREGULARITIES: There is tensile capacity to develop the strength of the diaphragm at reentrant corners or other locations of plan irregularities. (Commentary: Sec. A.4.1.7. Tier 2: Sec. 5.6.1.4)

C NC N/A U DIAPHRAGM REINFORCEMENT AT OPENINGS: There is reinforcing around all diaphragm openings larger than 50% of the building width in either major plan dimension. (Commentary: Sec. A.4.1.8. Tier 2: Sec. 5.6.1.5)

Flexible Diaphragms

C NC N/A U CROSS TIES: There are continuous cross ties between diaphragm chords. (Commentary: Sec. A.4.1.2. Tier 2: Sec. 5.6.1.2)

C NC N/A U STRAIGHT SHEATHING: All straight sheathed diaphragms have aspect ratios less than 1-to-1 in the direction being considered. (Commentary: Sec. A.4.2.1. Tier 2: Sec. 5.6.2)

C NC N/A U SPANS: All wood diaphragms with spans greater than 12 ft consist of wood structural panels or diagonal sheathing. (Commentary: Sec. A.4.2.2. Tier 2: Sec. 5.6.2)

C NC N/A U DIAGONALLY SHEATHED AND UNBLOCKED DIAPHRAGMS: All diagonally sheathed or unblocked wood structural panel diaphragms have horizontal spans less than 30 ft and aspect ratios less than or equal to 3-to-1. (Commentary: Sec. A.4.2.3. Tier 2: Sec. 5.6.2)

C NC N/A U NONCONCRETE FILLED DIAPHRAGMS: Untopped metal deck diaphragms or metal deck diaphragms with fill other than concrete shall consist of horizontal spans of less than 40 ft and have aspect ratios less than 4-to-1. (Commentary: Sec. A.4.3.1. and Tier 2: Sec. 5.6.3)

C NC N/A U OTHER DIAPHRAGMS: The diaphragm does not consist of a system other than wood, metal deck, concrete, or horizontal bracing. (Commentary: Sec. A.4.7.1. Tier 2: Sec. 5.6.5)

Connections

C NC N/A U STIFFNESS OF WALL ANCHORS: Anchors of concrete or masonry walls to wood structural elements are installed taut and are stiff enough to limit the relative movement between the wall and the diaphragm to no greater than 1/8 in. before engagement of the anchors. (Commentary: Sec. A.5.1.4. Tier 2: Sec. 5.7.1.2)

C NC N/A U BEAM, GIRDER, AND TRUSS SUPPORTS: Beams, girders, and trusses supported by unreinforced masonry walls or pilasters have independent secondary columns for support of vertical loads. (Commentary: Sec. A.5.4.5. Tier 2: Sec. 5.7.4.4)

Project: _____ Location: _____

Completed by: _____ Date: _____

16.17 NONSTRUCTURAL CHECKLIST

Life Safety Systems

C NC N/A U LS-LMH; PR-LMH. FIRE SUPPRESSION PIPING: Fire suppression piping is anchored and braced in accordance with NFPA-13. (Commentary: Sec. A.7.13.1. Tier 2: Sec. 13.7.4)

C NC N/A U LS-LMH; PR-LMH. FLEXIBLE COUPLINGS: Fire suppression piping has flexible couplings in accordance with NFPA-13. (Commentary: Sec. A.7.13.2. Tier 2: Sec. 13.7.4)

C NC N/A U LS-LMH; PR-LMH. EMERGENCY POWER: Equipment used to power or control life safety systems is anchored or braced. (Commentary: Sec. A.7.12.1. Tier 2: Sec. 13.7.7)

C NC N/A U LS-LMH; PR-LMH. STAIR AND SMOKE DUCTS: Stair pressurization and smoke control ducts are braced and have flexible connections at seismic joints. (Commentary: Sec. A.7.14.1. Tier 2: Sec. 13.7.6)

C NC N/A U LS-MH; PR-MH. SPRINKLER CEILING CLEARANCE: Penetrations through panelized ceilings for fire suppression devices provide clearances in accordance with NFPA-13. (Commentary: Sec. A.7.13.3. Tier 2: Sec. 13.7.4)

C NC N/A U LS-not required; PR-LMH. EMERGENCY LIGHTING: Emergency and egress lighting equipment is anchored or braced. (Commentary: Sec. A.7.3.1. Tier 2: Sec. 13.7.9)

Hazardous Materials

C NC N/A U LS-LMH; PR-LMH. HAZARDOUS MATERIAL EQUIPMENT: Equipment mounted on vibration isolators and containing hazardous material is equipped with restraints or snubbers. (Commentary: Sec. A.7.12.2. Tier 2: 13.7.1)

C NC N/A U LS-LMH; PR-LMH. HAZARDOUS MATERIAL STORAGE: Breakable containers that hold hazardous material, including gas cylinders, are restrained by latched doors, shelf lips, wires, or other methods. (Commentary: Sec. A.7.15.1. Tier 2: Sec. 13.8.4)

C NC N/A U LS-MH; PR-MH. HAZARDOUS MATERIAL DISTRIBUTION: Piping or ductwork conveying hazardous materials is braced or otherwise protected from damage that would allow hazardous material release. (Commentary: Sec. A.7.13.4. Tier 2: Sec. 13.7.3 and 13.7.5)

C NC N/A U LS-MH; PR-MH. SHUT-OFF VALVES: Piping containing hazardous material, including natural gas, has shut-off valves or other devices to limit spills or leaks. (Commentary: Sec. A.7.13.3. Tier 2: Sec. 13.7.3 and 13.7.5)

C NC N/A U LS-LMH; PR-LMH. FLEXIBLE COUPLINGS: Hazardous material ductwork and piping, including natural gas piping, has flexible couplings. (Commentary: Sec. A.7.15.4, Tier 2: Sec.13.7.3 and 13.7.5)

C NC N/A U LS-MH; PR-MH. PIPING OR DUCTS CROSSING SEISMIC JOINTS: Piping or ductwork carrying hazardous material that either crosses seismic joints or isolation planes or is connected to independent structures has couplings or other details to accommodate the relative seismic displacements. (Commentary: Sec. A.7.13.6. Tier 2: Sec.13.7.3, 13.7.5, and 13.7.6)

Partitions

C NC N/A U LS-LMH; PR-LMH. UNREINFORCED MASONRY: Unreinforced masonry or hollow-clay tile partitions are braced at a spacing of at most 10 ft in Low or Moderate Seismicity, or at most 6 ft in High Seismicity. (Commentary: Sec. A.7.1.1. Tier 2: Sec. 13.6.2)

C NC N/A U LS-LMH; PR-LMH. HEAVY PARTITIONS SUPPORTED BY CEILINGS: The tops of masonry or hollow-clay tile partitions are not laterally supported by an integrated ceiling system. (Commentary: Sec. A.7.2.1. Tier 2: Sec. 13.6.2)

C NC N/A U LS-MH; PR-MH. DRIFT: Rigid cementitious partitions are detailed to accommodate the following drift ratios: in steel moment frame, concrete moment frame, and wood frame buildings, 0.02; in other buildings, 0.005. (Commentary A.7.1.2 Tier 2: Sec. 13.6.2)

C NC N/A U LS-not required; PR-MH. LIGHT PARTITIONS SUPPORTED BY CEILINGS: The tops of gypsum board partitions are not laterally supported by an integrated ceiling system. (Commentary: Sec. A.7.2.1. Tier 2: Sec. 13.6.2)

C NC N/A U LS-not required; PR-MH. STRUCTURAL SEPARATIONS: Partitions that cross structural separations have seismic or control joints. (Commentary: Sec. A.7.1.3. Tier 2. Sec. 13.6.2)

C NC N/A U LS-not required; PR-MH. TOPS: The tops of ceiling-high framed or panelized partitions have lateral bracing to the structure at a spacing equal to or less than 6 ft. (Commentary: Sec. A.7.1.4. Tier 2. Sec. 13.6.2)

Ceilings

C NC N/A U LS-MH; PR-LMH. SUSPENDED LATH AND PLASTER: Suspended lath and plaster ceilings have attachments that resist seismic forces for every 12 ft^2 of area. (Commentary: Sec. A.7.2.3. Tier 2: Sec. 13.6.4)

C NC N/A U LS-MH; PR-LMH. SUSPENDED GYPSUM BOARD: Suspended gypsum board ceilings have attachments that resist seismic forces for every 12 ft^2 of area. (Commentary: Sec. A.7.2.3. Tier 2: Sec. 13.6.4)

C NC N/A U LS-not required; PR-MH. INTEGRATED CEILINGS: Integrated suspended ceilings with continuous areas greater than 144 ft^2, and ceilings of smaller areas that are not surrounded by restraining partitions, are laterally restrained at a spacing no greater than 12 ft with members attached to the structure above. Each restraint location has a minimum of four diagonal wires and compression struts, or diagonal members capable of resisting compression. (Commentary: Sec. A.7.2.2. Tier 2: Sec. 13.6.4)

C NC N/A U LS-not required; PR-MH. EDGE CLEARANCE: The free edges of integrated suspended ceilings with continuous areas greater than 144 ft^2 have clearances from the enclosing wall or partition of at least the following: in Moderate Seismicity, 1/2 in.; in High Seismicity, 3/4 in. (Commentary: Sec. A.7.2.4. Tier 2: Sec. 13.6.4)

C NC N/A U LS-not required; PR-MH. CONTINUITY ACROSS STRUCTURE JOINTS: The ceiling system does not cross any seismic joint and is not attached to multiple independent structures. (Commentary: Sec. A.7.2.5. Tier 2: Sec. 13.6.4)

C NC N/A U LS-not required; PR-H. EDGE SUPPORT: The free edges of integrated suspended ceilings with continuous areas greater than 144 ft^2 are supported by closure angles or channels not less than 2 in. wide. (Commentary: Sec. A.7.2.6. Tier 2: Sec. 13.6.4)

C NC N/A U LS-not required; PR-H. SEISMIC JOINTS: Acoustical tile or lay-in panel ceilings have seismic separation joints such that each continuous portion of the ceiling is no more than 2500 ft^2 and has a ratio of long-to-short dimension no more than 4-to-1. (Commentary: Sec. A.7.2.7. Tier 2: 13.6.4)

Light Fixtures

C NC N/A U LS-MH; PR-MH. INDEPENDENT SUPPORT: Light fixtures that weigh more per square foot than the ceiling they penetrate are supported independent of the grid ceiling suspension system by a minimum of two wires at diagonally opposite corners of each fixture. (Commentary: Sec. A.7.3.2. Tier 2: Sec. 13.6.4 and 13.7.9)

C NC N/A U LS-not required; PR-H. PENDANT SUPPORTS: Light fixtures on pendant supports are attached at a spacing equal to or less than 6 ft and, if rigidly supported, are free to move with the structure to which they are attached without damaging adjoining components. (Commentary: A.7.3.3. Tier 2: Sec. 13.7.9)

C NC N/A U LS-not required; PR-H. LENS COVERS: Lens covers on light fixtures are attached with safety devices. (Commentary: Sec. A.7.3.4. Tier 2: Sec. 13.7.9)

Cladding and Glazing

C NC N/A U LS-MH; PR-MH. CLADDING ANCHORS: Cladding components weighing more than 10 lb/ft^2 are mechanically anchored to the structure at a spacing equal to or less than the following: for Life Safety in Moderate Seismicity, 6 ft; for Life Safety in High Seismicity and for Position Retention in any seismicity, 4 ft. (Commentary: Sec. A.7.4.1. Tier 2: Sec. 13.6.1)

C NC N/A U LS-MH; PR-MH. CLADDING ISOLATION: For steel or concrete moment frame buildings, panel connections are detailed to accommodate a story drift ratio of at least the following: for Life Safety in Moderate Seismicity, 0.01; for Life Safety in High Seismicity and for Position Retention in any seismicity, 0.02. (Commentary: Sec. A.7.4.3. Tier 2: Section 13.6.1)

C NC N/A U LS-MH; PR-MH. MULTI-STORY PANELS: For multi-story panels attached at more than one floor level, panel connections are detailed to accommodate a story drift ratio of at least the following: for Life Safety in Moderate Seismicity, 0.01; for Life Safety in High Seismicity and for Position Retention in any seismicty, 0.02. (Commentary: Sec. A.7.4.4. Tier 2: Sec. 13.6.1)

C NC N/A U LS-MH; PR-MH. PANEL CONNECTIONS: Cladding panels are anchored out-of-plane with a minimum number of connections for each wall panel, as follows: for Life Safety in Moderate Seismicity, 2 connections; for Life Safety in High Seismicity and for Position Retention in any seismicity, 4 connections. (Commentary: Sec. A.7.4.5. Tier 2: Sec. 13.6.1.4)

C NC N/A U LS-MH; PR-MH. BEARING CONNECTIONS: Where bearing connections are used, there is a minimum of two bearing connections for each cladding panel. (Commentary: Sec. A.7.4.6. Tier 2: Sec. 13.6.1.4)

C NC N/A U LS-MH; PR-MH. INSERTS: Where concrete cladding components use inserts, the inserts have positive anchorage or are anchored to reinforcing steel. (Commentary: Sec. A.7.4.7. Tier 2: Sec. 13.6.1.4)

C NC N/A U LS-MH; PR-MH. OVERHEAD GLAZING: Glazing panes of any size in curtain walls and individual interior or exterior panes over 16 ft^2 in area are laminated annealed or laminated heat-strengthened glass and are detailed to remain in the frame when cracked. (Commentary: Sec. A.7.4.8: Tier 2: Sec. 13.6.1.5)

Masonry Veneer

C NC N/A U LS-LMH; PR-LMH. TIES: Masonry veneer is connected to the backup with corrosion-resistant ties. There is a minimum of one tie for every 2-2/3 ft^2, and the ties have spacing no greater than the following: for Life Safety in Low or Moderate Seismicity, 36 in.; for Life Safety in High Seismicity and for Position Retention in any seismicity, 24 in. (Commentary: Sec. A.7.5.1. Tier 2: Sec. 13.6.1.2)

C NC N/A U LS-LMH; PR-LMH. SHELF ANGLES: Masonry veneer is supported by shelf angles or other elements at each floor above the ground floor. (Commentary: Sec. A.7.5.2. Tier 2: Sec. 13.6.1.2)

C NC N/A U LS-LMH; PR-LMH. WEAKENED PLANES: Masonry veneer is anchored to the backup adjacent to weakened planes, such as at the locations of flashing. (Commentary: Sec. A.7.5.3. Tier 2: Sec. 13.6.1.2)

C NC N/A U LS-LMH; PR-LMH. UNREINFORCED MASONRY BACKUP: There is no unreinforced masonry backup. (Commentary: Sec. A.7.7.2. Tier 2: Section 13.6.1.1 and 13.6.1.2)

C NC N/A U LS-MH; PR-MH. STUD TRACKS: For veneer with metal stud backup, stud tracks are fastened to the structure at a spacing equal to or less than 24 in. on center. (Commentary: Sec. A.7.6.1. Tier 2: Section 13.6.1.1 and 13.6.1.2)

C NC N/A U LS-MH; PR-MH. ANCHORAGE: For veneer with concrete block or masonry backup, the backup is positively anchored to the structure at a horizontal spacing equal to or less than 4 ft along the floors and roof. (Commentary: Sec. A.7.7.1. Tier 2: Section 13.6.1.1 and 13.6.1.2)

C NC N/A U LS-not required; PR-MH. WEEP HOLES: In veneer anchored to stud walls, the veneer has functioning weep holes and base flashing. (Commentary: Sec. A.7.5.6. Tier 2: Section 13.6.1.2)

C NC N/A U LS-not required; PR-MH. OPENINGS: For veneer with metal stud backup, steel studs frame window and door openings. (Commentary: Sec. A.7.6.2. Tier 2: Sec. 13.6.1.1 and 13.6.1.2)

Parapets, Cornices, Ornamentation, and Appendages

C NC N/A U LS-LMH; PR-LMH. URM PARAPETS OR CORNICES: Laterally unsupported unreinforced masonry parapets or cornices have height-to-thickness ratios no greater than the following: for Life Safety in Low or Moderate Seismicity, 2.5; for Life Safety in High Seismicity and for Position Retention in any seismicity, 1.5. (Commentary: Sec. A.7.8.1. Tier 2: Sec. 13.6.5)

C NC N/A U LS-LMH; PR-LMH. CANOPIES: Canopies at building exits are anchored to the structure at a spacing no greater than the following: for Life Safety in Low or Moderate Seismicity, 10 ft; for Life Safety in High Seismicity and for Position Retention in any seismicity, 6 ft. (Commentary: Sec. A.7.8.2. Tier 2: Sec. 13.6.6)

C NC N/A U LS-MH; PR-LMH. CONCRETE PARAPETS: Concrete parapets with height-to-thickness ratios greater than 2.5 have vertical reinforcement. (Commentary: Sec. A.7.8.3. Tier 2: Sec. 13.6.5)

C NC N/A U LS-MH; PR-LMH. APPENDAGES: Cornices, parapets, signs, and other ornamentation or appendages that extend above the highest point of anchorage to the structure or cantilever from components are reinforced and anchored to the structural system at a spacing equal to or less than 6 ft. This checklist item does not apply to parapets or cornices covered by other checklist items. (Commentary: Sec. A.7.8.4. Tier 2: Sec. 13.6.6)

Masonry Chimneys

C NC N/A U LS-LMH; PR-LMH. URM CHIMNEYS: Unreinforced masonry chimneys extend above the roof surface no more than the following: for Life Safety in Low or Moderate Seismicity, 3 times the least dimension of the chimney; for Life Safety in High Seismicity and for Position Retention in any seismicity, 2 times the least dimension of the chimney. (Commentary: Sec. A.7.9.1. Tier 2: 13.6.7)

C NC N/A U LS-LMH; PR-LMH. ANCHORAGE: Masonry chimneys are anchored at each floor level, at the topmost ceiling level, and at the roof. (Commentary: Sec. A.7.9.2. Tier 2: 13.6.7)

Stairs

C NC N/A U LS-LMH; PR-LMH. STAIR ENCLOSURES: Hollow-clay tile or unreinforced masonry walls around stair enclosures are restrained out-of-plane and have height-to-thickness ratios not greater than the following: for Life Safety in Low or Moderate Seismicity, 15-to-1; for Life Safety in High Seismicity and for Position Retention in any seismicity, 12-to-1. (Commentary: Sec. A.7.10.1. Tier 2: Sec. 13.6.2 and 13.6.8)

C NC N/A U LS-LMH; PR-LMH. STAIR DETAILS: In moment frame structures, the connection between the stairs and the structure does not rely on shallow anchors in concrete. Alternatively, the stair details are capable of accommodating the drift calculated using the Quick Check procedure of Section 4.5.3.1 without including any lateral stiffness contribution from the stairs. (Commentary: Sec. A.7.10.2. Tier 2: 13.6.8)

Contents and Furnishings

C NC N/A U LS-MH; PR-MH. INDUSTRIAL STORAGE RACKS: Industrial storage racks or pallet racks more than 12 ft high meet the requirements of ANSI/MH 16.1 as modified by ASCE 7 Chapter 15. (Commentary: Sec. A.7.11.1. Tier 2: Sec. 13.8.1)

C NC N/A U LS-H; PR-MH. TALL NARROW CONTENTS: Contents more than 6 ft high with a height-to-depth or height-to-width ratio greater than 3-to-1 are anchored to the structure or to each other. (Commentary: Sec. A.7.11.2. Tier 2: Sec. 13.8.2)

C NC N/A U LS-H; PR-H. FALL-PRONE CONTENTS: Equipment, stored items, or other contents weighing more than 20 lb whose center of mass is more than 4 ft above the adjacent floor level are braced or otherwise restrained. (Commentary: Sec. A.7.11.3. Tier 2: Sec. 13.8.2)

C NC N/A U LS-not required; PR-MH. ACCESS FLOORS: Access floors more than 9 in. high are braced. (Commentary: Sec. A.7.11.4. Tier 2: Sec. 13.8.3)

C NC N/A U LS-not required; PR-MH. EQUIPMENT ON ACCESS FLOORS: Equipment and other contents supported by access floor systems are anchored or braced to the structure independent of the access floor. (Commentary: Sec. A.7.11.5. Tier 2: Sec. 13.7.7 and 13.8.3)

C NC N/A U LS-not required; PR-H. SUSPENDED CONTENTS: Items suspended without lateral bracing are free to swing from or move with the structure from which they are suspended without damaging themselves or adjoining components. (Commentary. A.7.11.6. Tier 2: Sec. 13.8.2)

Mechanical and Electrical Equipment

C NC N/A U LS-H; PR-H. FALL-PRONE EQUIPMENT: Equipment weighing more than 20 lb whose center of mass is more than 4 ft above the adjacent floor level, and which is not in-line equipment, is braced. (Commentary: A.7.12.4. Tier 2: 13.7.1 and 13.7.7)

C NC N/A U LS-H; PR-H. IN-LINE EQUIPMENT: Equipment installed in-line with a duct or piping system, with an operating weight more than 75 lb, is supported and laterally braced independent of the duct or piping system. (Commentary: Sec. A.7.12.5. Tier 2: Sec. 13.7.1)

C NC N/A U LS-H; PR-MH. TALL NARROW EQUIPMENT: Equipment more than 6 ft high with a height-to-depth or height-to-width ratio greater than 3-to-1 is anchored to the floor slab or adjacent structural walls. (Commentary: Sec. A.7.12.6. Tier 2: Sec. 13.7.1 and 13.7.7)

C NC N/A U LS-not required; PR-MH. MECHANICAL DOORS: Mechanically operated doors are detailed to operate at a story drift ratio of 0.01. (Commentary: Sec. A.7.12.7. Tier 2: Sec. 13.6.9)

C NC N/A U LS-not required; PR-H. SUSPENDED EQUIPMENT: Equipment suspended without lateral bracing is free to swing from or move with the structure from which it is suspended without damaging itself or adjoining components. (Commentary: Sec. A.7.12.8. Tier 2: Sec. 13.7.1 and 13.7.7)

C NC N/A U LS-not required; PR-H. VIBRATION ISOLATORS: Equipment mounted on vibration isolators is equipped with horizontal restraints or snubbers and with vertical restraints to resist overturning. (Commentary: Sec. A.7.12.9. Tier 2: Sec. 13.7.1)

C NC N/A U LS-not required; PR-H. HEAVY EQUIPMENT: Floor-supported or platform-supported equipment weighing more than 400 lb is anchored to the structure. (Commentary: Sec. A.7.12.10. Tier 2: 13.7.1 and 13.7.7)

C NC N/A U LS-not required; PR-H. ELECTRICAL EQUIPMENT: Electrical equipment is laterally braced to the structure. (Commentary: Sec. A.7.12.11. Tier 2: 13.7.7)

C NC N/A U LS-not required; PR-H. CONDUIT COUPLINGS: Conduit greater than 2.5 in. trade size that is attached to panels, cabinets, or other equipment and is subject to relative seismic displacement has flexible couplings or connections. (Commentary: Sec. A.7.12.12. Tier 2: 13.7.8)

Piping

C NC N/A U LS-not required; PR-H. FLEXIBLE COUPLINGS: Fluid and gas piping has flexible couplings. (Commentary: Sec. A.7.13.2. Tier 2: Sec. 13.7.3 and 13.7.5)

C NC N/A U LS-not required; PR-H. FLUID AND GAS PIPING: Fluid and gas piping is anchored and braced to the structure to limit spills or leaks. (Commentary: Sec. A.7.13.4. Tier 2: Sec. 13.7.3 and 13.7.5)

C NC N/A U LS-not required; PR-H. C-CLAMPS: One-sided C-clamps that support piping larger than 2.5 in. in diameter are restrained. (Commentary: Sec. A.7.13.5. Tier 2: Sec. 13.7.3 and 13.7.5)

C NC N/A U LS-not required; PR-H. PIPING CROSSING SEISMIC JOINTS: Piping that crosses seismic joints or isolation planes or is connected to independent structures has couplings or other details to accommodate the relative seismic displacements. (Commentary: Sec. A7.13.6. Tier 2: Sec.13.7.3 and Sec. 13.7.5)

Ducts

C NC N/A U LS-not required; PR-H. DUCT BRACING: Rectangular ductwork larger than 6 ft^2 in cross-sectional area and round ducts larger than 28 in. in diameter are braced. The maximum spacing of transverse bracing does not exceed 30 ft. The maximum spacing of longitudinal bracing does not exceed 60 ft. (Commentary: Sec. A.7.14.2. Tier 2: Sec. 13.7.6)

C NC N/A U LS-not required; PR-H. DUCT SUPPORT: Ducts are not supported by piping or electrical conduit. (Commentary: Sec. A.7.14.3. Tier 2: Sec. 13.7.6)

C NC N/A U LS-not required; PR-H. DUCTS CROSSING SEISMIC JOINTS: Ducts that cross seismic joints or isolation planes or are connected to independent structures have couplings or other details to accommodate the relative seismic displacements. (Commentary: Sec. A.7.14.5. Tier 2: Sec. 13.7.6)

Elevators

C NC N/A U LS-H; PR-H. RETAINER GUARDS: Sheaves and drums have cable retainer guards. (Commentary: Sec. A.7.16.1. Tier 2: 13.8.6)

C NC N/A U LS-H; PR-H. RETAINER PLATE: A retainer plate is present at the top and bottom of both car and counterweight. (Commentary: Sec. A.7.16.2. Tier 2: 13.8.6)

C NC N/A U LS-not required; PR-H. ELEVATOR EQUIPMENT: Equipment, piping, and other components that are part of the elevator system are anchored. (Commentary: Sec. A.7.16.3. Tier 2: 13.8.6)

C NC N/A U LS-not required; PR-H. SEISMIC SWITCH: Elevators capable of operating at speeds of 150 ft/min or faster are equipped with seismic switches that meet the requirements of ASME A17.1 or have trigger levels set to 20% of the acceleration of gravity at the base of the structure and 50% of the acceleration of gravity in other locations. (Commentary: Sec. A.7.16.4. Tier 2: 13.8.6)

C NC N/A U LS-not required; PR-H. SHAFT WALLS: Elevator shaft walls are anchored and reinforced to prevent toppling into the shaft during strong shaking. (Commentary: Sec. A.7.16.5. Tier 2: 13.8.6)

C NC N/A U LS-not required; PR-H. COUNTERWEIGHT RAILS: All counterweight rails and divider beams are sized in accordance with ASME A17.1. (Commentary: Sec. A.7.16.6. Tier 2: 13.8.6)

C NC N/A U LS-not required; PR-H. BRACKETS: The brackets that tie the car rails and the counterweight rail to the structure are sized in accordance with ASME A17.1. (Commentary: Sec. A.7.16.7. Tier 2: 13.8.6)

C NC N/A U LS-not required; PR-H. SPREADER BRACKET: Spreader brackets are not used to resist seismic forces. (Commentary: Sec. A.7.16.8. Tier 2: 13.8.6)

C NC N/A U LS-not required; PR-H. GO-SLOW ELEVATORS: The building has a go-slow elevator system. (Commentary: Sec. A.7.16.9. Tier 2: 13.8.6)

INDEX

Page numbers followed by *e*, *f*, and *t* indicate equations, figures, and tables, respectively.

acceleration-sensitive component, defined 3
acceptance criteria. *See* analysis procedures and acceptance criteria
action, defined 3
active fault, defined 3
adjacent buildings
  deficiency-based procedure guidelines for 391–392, 392*f*
  evaluation and retrofit requirements 55
  Tier 1 checklist 339
  Tier 2 deficiency-based evaluation and retrofit 77
adjusted resistance, defined 3
analysis procedures and acceptance criteria 93–122
  acceptance criteria 115–119
    defined 3
    general requirements 114–118, 115*f*, 116*t*, 117*f*, 118*t*
    linear procedures 118–119, 118*e*, 119*e*
    nonlinear procedures 119
  alternative modeling parameters 119–122, 121*f*, 122*f*
  analysis procedures 105–114
    linear dynamic procedure 109
    linear static procedure 105–109, 106*e*, 106*f*, 107*e*, 107*t*, 108*e*
    nonlinear dynamic procedure 113–114
    nonlinear static procedure 109–113, 110*f*, 111*e*, 111*t*, 112*e*
  general requirements 93–103
    building separation 102
    component gravity loads and load combinations 93–94, 93*e*
    configuration 96
    continuity 101, 101*e*
    diaphragms, chords, collectors, and ties 99–101, 100*e*, 100*f*, 101*e*
    mathematical modeling 94–96, 95*e*
    multidirectional seismic events 96–98, 97*t*
    overturning 99, 99*e*
    P-Δ effects 98
    soil-structure interaction 98
    structure sharing common elements 102
    structure walls and their anchorages 101–102, 101*e*, 101*t*
    verification of analysis assumptions 102–103
  procedure selection 103–105
    alternative rational analysis 105
    linear procedures 103–104, 103*e*, 104*e*, 104*f*
    nonlinear procedures 104–105, 112*e*
  scope 93
anchorages
  to concrete 150
  connection procedures 82
  deficiency-based procedure guidelines for 417–418, 417*f*, 418*f*
  to masonry walls 248–249
  structural walls and 101–102, 101*e*, 101*t*
appendages and marquees 291–292, 426
archaic diaphragms 175
architectural, mechanical, and electrical components 277–302
  architectural components 278*t*, 282*t*, 285–293
    appendages and marquees 291–292
    ceilings 290
    chimneys and stacks 292
    doors required for emergency egress 292–293
    exterior walls 285–289, 288*e*
    interior veneers 290
    parapets and cornices 291, 291*f*
    partitions 289
    stairs and stair enclosures 292
  deficiency-based procedure guidelines 427–428
  distribution components 282*t*, 295–297
    ductwork 297
    fire suppression piping 295–296
    fluid piping other than fire suppression 296–297
    pressure piping 295
  electrical and communications
    distribution components 298
    equipment 278*t*, 297–298
    light fixtures 279*t*, 299
  evaluation and retrofit
    components 280–281
    nonstructural components 277, 278–279*t*, 279–280
    procedures 281, 282*t*, 283–284, 283*e*, 284*e*
  furnishings and interior equipment 279*t*, 282*t*
    computer access floors 300
    computer and communication racks 301
    contents 300
    conveyers 302
    elevators 301–302
    hazardous materials storage 300–301
    storage racks 299–300
  mechanical and electrical components 282*t*
    mechanical equipment 278*t*, 292–293
    storage vessels and water heaters 294–295
  retrofit approaches 284–285
  scope 277
as-built information
  evaluation and retrofit requirements 51, 52–54*t*, 54–55
  seismic evaluation process 22, 24
  seismic retrofit process 26
  Tier 2 deficiency-based evaluation and retrofit 73, 76
ASCE 41-13 Standard, application of 431–436
  mandatory mitigation 431–433
  triggered mitigation 434–436
  voluntary mitigation 433–434
aspect ratio, defined 3
assembly, defined 3
authority having jurisdiction
  defined 3
  seismic retrofit and responsibility of 29–30

balloon framing, defined 3
bare metal deck diaphragms 171–172
base, defined 3
base slab averaging, kinematic interaction and radiation damping soil–structure interaction effects 141, 141*e*

beam, defined 3
bean jacketing, defined 4
bearing wall, defined 3
bed joint, defined 3
benchmark building, defined 3
boundary component, defined 3
BPOE (Basic Performance Objective for Existing Buildings) 32*t*, 58
  defined 3
BPON (Basic Performance Objective Equivalent to New Building Standards) 32, 34–35, 35*t*, 58, 435
  defined 3
braced frames
  deficiency-based procedure guidelines for 409–412, 410*f*, 411*f*, 412*f*
  defined 3
  Tier 2 deficiency-based evaluation and retrofit 81
  see also concrete braced frames; steel braced frames
BSE-1E
  BPOE and 31–34, 32*t*
  defined 3
  ground motion acceleration histories 48
  spectral response acceleration parameters 44, 46
BSE-1N
  defined 3
  ground motion acceleration histories 48
  spectral response acceleration parameters 44, 45
BSE-1X, defined 3
BSE-2E
  BPOE and 31–34, 32*t*
  defined 3
  ground motion acceleration histories 48
  spectral response acceleration parameters 44–46
BSE-2N
  defined 3
  ground motion acceleration histories 48
  spectral response acceleration parameters 44
BSE-2X, defined 3
buckling-restrained braced frames (BRBF) 164–170
building configuration
  analysis procedures and acceptance criteria 96
  evaluation and retrofit requirements 54
building performance level, defined 3
building pounding, evaluation and retrofit requirements 55
building separation, analysis procedures and acceptance criteria 102
building systems, deficiency-based procedure guidelines for 391–397
  condition of materials 395–397, 397*f*
  configuration 392–395, 393*f*, 394*f*, 395*f*
  general 391–392, 392*f*
building type
  defined 3
  evaluation and retrofit requirements 51, 52–54*t*, 54
  Tier 1 screening 52–54*t*, 61

capacity, defined 3
cast iron 176–177, 177*e*
  defined 3
cast-in-place concrete diaphragms 220–221
cavity wall, defined 4
ceilings 290, 423–424
checklist, defined 4. *See also* Tier 1 checklists
chimneys and stacks 292, 426
chord and collector elements 175–176
cladding and glazing 424–425
clay tile masonry, defined 4
clay-unit masonry, defined 4
closed stirrups or ties, defined 4
code official, defined 4
codes, for new construction 1, 2
cold-formed steel (CFS) light frame. *See* wood and cold-formed steel (CFS) light *frame*
collapse prevention structural performance level 39, 43*f*, 43*t*, 44
collar joint, defined 4
column axial stress from overturning, Tier 1 screening 70, 70*e*
column jacketing, defined 4
common building type, defined 4
component, defined 4
component gravity loads and load combinations, analysis procedures and acceptance criteria 93–94, 93*e*
component properties, evaluation and retrofit requirements 54
composite masonry wall, defined 4
composite panel, defined 4
compressive strength, masonry assessment 229
computer access floors 300
computer and communications racks 301
concentrically braced frame (CBF) 164–167
  deficiency-based procedure guidelines for 409, 409*f*, 411, 411*f*
  defined 4
concrete 179–223
  braced frames 219–220
  cast-in-place concrete diaphragms 220–221
  concrete masonry, defined 4
  diaphragms, deficiency-based procedure guidelines for 416–417
  foundations 221–223
  frame columns, Tier 1 screening 69, 69*e*
  frames with infill masonry shear walls (C3) and flexible diaphragms (C3A)
    immediate occupancy structural checklists, Tier 1 363–364
    life safety structural checklists, Tier 1 362–363
  frames with infills 206–209, 207*t*, 208*t*
  general assumptions and requirements
    connections to existing concrete 190
    development and splices of reinforcement 189–190, 189*e*
    flexure and axial loads 188–189
    modeling and design 185–187, 186*t*, 187*f*
    retrofit measures 191
    shear and torsion 189
    strength and deformability 187–188, 188*t*
  material properties and condition assessment 179–181
    condition assessment 184–185
    in-place materials and components 180–184, 180*t*, 183*t*
  moment frames 191–205
    deficiency-based procedure guidelines for 401–402
    posttensioned concrete beam-column moment frame 192*t*, 193*t*, 194*t*, 195*t*, 199–201, 199*t*, 200*t*
    reinforced concrete beam-column moment frames 191–199, 192*f*, 192*t*, 193*t*, 194*t*, 195*t*, 196*e*, 196*t*, 197*e*, 197*f*, 197*t*, 198*e*, 199*t*
    slab-column moment frames 201–205, 201*e*, 202*e*, 202*t*, 203*f*, 204*t*
    Tier 1 immediate occupancy structural checklists 358–360

Tier 1 life safety structural checklists 357–358
Tier 2 deficiency-based evaluation and retrofit 79–80
types of frames 191
precast concrete diaphragms 221
precast concrete frames 205–206
precast concrete shear walls 80–81, 217–219, 406
scope 179
shear walls 209–217, 209*t*, 210*f*, 212*e*, 212*f*, 213*f*, 213*t*, 214*t*, 215*t*, 216*t*
deficiency-based procedure guidelines for 404–405, 404*f*, 405*f*, 406*f*
Tier 2 deficiency-based evaluation and retrofit 80
shear walls with stiff diaphragms (C2) or flexible diaphragms (C2A)
immediate occupancy structural checklists, Tier 1 361–362
life safety structural checklists, Tier 1 360–361
concurrent seismic events, analysis procedures and acceptance criteria 96–98, 97*t*
condition of service, defined 4
connections
connection, defined 4
connection hardware, defined 4
deficiency-based procedure guidelines for 417–421
anchorage of normal forces 417–418, 417*f*, 418*f*
interconnection of elements 420–421, 420*f*
shear transfer 418–419
vertical components 418*f*, 419–420
Tier 2 deficiency-based evaluation and retrofit 82–83
construction documents
submittal of 29
writing of 28
construction quality 28–29
contents of building, defined 4. S*ee also* furnishings and interior equipment
continuity, analysis procedures and acceptance criteria 101, 101*e*
continuity plates, defined 4
control node, defined 4
conveyers 302
cornices 291
deficiency-based procedure guidelines for 426
Tier 1 checklists 378
coupling beam, defined 4
cripple studs, defined 4
cripple wall, defined 4
critical action, defined 4
cross tie, defined 4
cross walls
defined 4
URM alternative procedures 334–335, 334*t*, 335*e*

damping
mathematical modeling, analysis procedures 96
seismic isolation and energy dissipation 303–304
damping soil-structure interaction effects, kinematic interaction and radiation damping soil–structure interaction effects 142–143, 142*e*, 142*f*, 143*e*
data sheet example 437
decay, defined 4
decking, defined 4
deep foundations
deficiency-based procedure guidelines 422
defined 4
retrofit measures 144
default material values, Tier 1 screening 61, 63, 63*t*, 64*t*, 65*t*
deficiency-based procedure guidelines 391–430
for building systems 391–397
condition of materials 395–397, 397*f*
configuration 392–395, 393*f*, 394*f*, 395*f*
general 391–392, 392*f*
for connections 417–421
anchorage of normal forces 417–418, 417*f*, 418*f*
interconnection of elements 420–421, 420*f*
shear transfer 418–419
vertical components 418*f*, 419–420
for diaphragms 412–417
concrete diaphragms 416–417
general 412–415, 412*f*, 413*f*, 414*f*, 415*f*
metal deck diaphragms 416
others 417
wood diaphragms 415–416
for geological site hazards and foundations 421–422
for nonstructural components 422–430
building contents and furnishing 427
ceiling systems 423–424
cladding and glazing 424–425
ducts 429
elevators 430
hazardous materials 429–430
light fixtures 424
masonry chimneys 426
masonry veneer 425
mechanical and electrical equipment 427–428
metal stud backup systems 426
parapets, cornices, ornamentation, and appendages 426
partitions 423
piping 428–429
stairs 426–427
for seismic-force-resisting systems 394–412
braced frames 409–412, 410*f*, 411*f*, 412*f*
moment frames 397–403, 398*f*, 399*f*, 403*f*, 404*f*
shear walls 403–409, 404*f*, 405*f*, 406*f*, 407*f*
definitions listed 3–9
deformability, defined 4
deformation-controlled actions
acceptance criteria 115–117, 115*f*, 116*t*, 117*f*
defined 4
deformation-sensitive component, defined 4
demand, defined 4
design earthquake, defined 4
design professional, defined 4
design resistance, defined 4
diagonal bracing, Tier 1 screening 70, 70*e*
diaphragms
analysis procedures and acceptance criteria 99–101, 100*e*, 100*f*, 101*e*
concrete 416–417
deficiency-based procedure guidelines for 412–417
concrete diaphragms 416–417
general 412–415, 412*f*, 413*f*, 414*f*, 415*f*
metal deck diaphragms 416
others 417
wood diaphragms 415–416
definitions 4
flexible diaphragm
defined 5
forces and Tier 1 screening 70, 70*e*
out-of-plane wall anchorage to 101, 101*e*, 101*t*

precast concrete 221
steel 171–176
archaic diaphragms 175
bare metal deck diaphragms 171–172
chord and collector elements 175–176
horizontal steel bracing (steel truss diaphragms) 174–175
metal deck diaphragms with nonstructural topping 173–174
metal deck diaphragms with structural concrete topping 172–173
Tier 2 deficiency-based evaluation and retrofit 82
URM alternative procedures 335, 335*e*, 335*t*, 336*f*, 336*t*
wood
deficiency-based procedure guidelines for 415–416
stiffness and strength assumptions 257*f*, 263*t*, 264*t*, 272–275, 272*e*, 274*e*
types of 270–272
differential compaction, defined 5
differential settlement compaction, mitigation 129
dimensioned lumber, defined 5
displacement-dependent energy dissipation devices, defined 5
distribution components 282*t*
ductwork 297
fire suppression piping 295–296
fluid piping other than fire suppression 296–297
pressure piping 295
doors required for emergency egress 292–293
dowel-type fasteners, defined 5
dressed size, defined 5
drift, defined 5
drilled shafts, strengths and stiffness 140–141
dry service, defined 5
drywall, defined 5
dual systems with backup steel moment frames and stiff diaphragms (S4)
immediate occupancy structural checklists, Tier 1 353–355
life safety structural checklists, Tier 1 352–353
ducts 297, 429

eccentrically based frames
deficiency-based procedure guidelines for 411–412, 412*f*
defined 5
steel 167–168, 167*e*, 168*e*
edge distance, defined 5
effective damping, defined 4, 5
effective stiffness, defined 5
effective void ratio, defined 5
electrical components. *See* architectural, mechanical, and electrical components
element, defined 5
elevators 301–302, 430
embedment, kinematic interaction and radiation damping soil–structure interaction effects 141–142, 142*e*
energy dissipation. *See* seismic isolation and energy dissipation
enhanced performance objectives 34
enhanced safety structural performance range 36, 38–39
evaluation and retrofit requirements
as-built information 51, 52–54*t*, 54–55
evaluation defined 5
procedures
limitations on use of Tier 1 and Tier 2 procedures 55–58, 56*t*
Tier 1 screening procedure 51, 58
Tier 2 deficiency-based procedure 51, 58
Tier 3 systemic evaluation procedure 59
retrofit defined 7
existing documents, Tier 1 screening and benchmark buildings 64–65
expected and lower-bound strengths
acceptance criteria 115*f*, 117
expected strength defined 5
exterior wall components 285–289, 288*e*

fair condition, defined 5
fault, defined 5
fault rupture
mitigation 129
site characterization 124
field verification, Tier 1 screening and benchmark buildings 65
fire suppression piping 295–296
flexible component, defined 5
flexible connection, defined 5
flexural stress of steel moment frames, Tier 1 screening 70–71, 70*e*
flexural tensile strength, masonry assessment 229
flooding or inundation
mitigation 129
site characterization 128
fluid piping other than fire suppression 296–297
force-controlled actions
acceptance criteria 115–117, 115*f*, 116*t*, 117*f*
defined 5
foundations 123–144
concrete 221–223
deficiency-based procedure guidelines for 395–396
foundation system defined 5
kinematic interaction and radiation damping soil–structure interaction effects 141–143, 141*e*, 142*e*, 142*f*, 143*e*
masonry elements 249–250
mathematical modeling, analysis procedures 96
mitigation 128–129
retrofit 143–144
scope 123
seismic earth pressure 143, 143*e*
site characterization 123–128
flooding or inundation 128
foundation information and conditions 123–124
landsliding 128
seismic-geologic hazards 124–128, 125*t*
strengths and stiffness 129–141
drilled shafts 140–141
expected foundation capacities 130, 130*e*
load-formation for shallow foundations 130–139, 131*e*, 131*f*, 132*e*
pile foundations 131*f*, 139–140, 140*e*
Tier 2 deficiency-based evaluation and retrofit 78
wood 275–276
fully restrained (FR) moment frames 150, 153–161, 153*t*, 154–155*t*, 155*e*, 156*e*, 156*t*, 157*e*, 158*e*, 159*e*, 160*e*
fundamental period, defined 5
furnishings and interior equipment 279*t*, 282*t*
computer access floors 300
computer and communications racks 301
conveyers 302

elevators 301–302
hazardous materials storage 300–301
storage racks 299–300

gauge or row spacing, defined 5
general requirements 1–30
definitions 3–9
notations 9–21
scope 1–3
coordination with new construction codes 2
guidance for programs, ordinances, and laws 2
historic buildings and 2
standard's applicability 1–2
standard's intent 2
seismic evaluation process 21–24, 23*f*
as-built information 22, 24
level of seismicity 22
performance objective selection 22
procedures 24, 54–54*t*, 56*t*
report 24
seismic retrofit process 21–22, 24–30, 25*f*
as-built information 26
construction documents 28
construction quality assurance 28–29
design verification 28
initial considerations 24, 26
jurisdictional authority responsibilities 29–30
level of seismicity 26
performance objective selection 26
procedures 26
strategies 26–28
geologic site hazards
deficiency-based procedure guidelines for 421–422
site characterization 124–128, 125*t*
Tier 1 screening and benchmark buildings 66
Tier 2 deficiency-based evaluation and retrofit 78
geometric irregularity, Tier 2 deficiency-based evaluation and retrofit 78
geometry, deficiency-based procedure guidelines for 394, 394*f*
glass block units 286–287
glazed exterior wall systems 287–289, 288*e*
global structural strengthening, as seismic retrofit strategy 27
global system, defined 5
glulam beam, defined 5
good condition, defined 5
grade, defined 5
grading rules, defined 5
gypsum wallboard, defined 5

hazardous materials
deficiency-based procedure guidelines 429–430
storage of 300–301
head joint, defined 5
header course, defined 5
high-deformability component, defined 5
historic buildings
application to 2
ASCE 41-13 Standard and mitigation 432, 434, 435
evaluation and retrofit requirements 51
hollow masonry unit, defined 5
hoops, defined 5
horizontal steel bracing (steel truss diaphragms) 174–175

immediate occupancy structural checklists, Tier 1
concrete frames with infill masonry shear walls (C3) and flexible diaphragms (C3A) 363–364
concrete moment frames (C1) 358–360
concrete shear walls with stiff diaphragms (C2) and flexible diaphragms (C2A) 361–362
dual systems with backup steel moment frames and stiff diaphragms (S4) 353–355
precast concrete frames with shear walls (PC2) 368–369
precast concrete frames without shear walls (PC2A) 370–371
precast or tilt-up concrete shear walls with flexible diaphragms (PC1) and stiff diaphragms (PC1A) 366–367
reinforced masonry bearing walls with flexible diaphragms (RM1) and stiff diaphragms (RM2) 372–373
steel braced frames with stiff diaphragms (S2) and flexible diaphragms (S2A) 349–350
steel frames with infill masonry shear walls and stiff diaphragms (S5) and flexible diaphragms (S5A) 356–357
steel light frames (S3) 351–352
steel moment frames with stiff diaphragms (S1) and flexible diaphragms (S1A) 346–348
unreinforced masonry bearing walls with flexible diaphragms (URM) and stiff diaphragms (URMA) 374–376
wood frames, commercial and industrial (W2) 344–345
wood light frames (W1) and multi-story, multi-unit residential wood frame (W1A) 342–343
immediate occupancy structural performance level 36, 43, 43*f*, 43*t*
impact echo, masonry assessment 227
infills
deficiency-based procedure guidelines for 397, 407–408, 407*f*
defined 5
masonry 244–248
out-of-plane actions 247–248, 248*e*, 248*t*
in-plane actions 233*f*, 244–247, 245*e*, 245*f*, 246*e*, 246*f*, 247*t*
types of 244
walls in frames, Tier 2 deficiency-based evaluation and retrofit 81
infrared thermography, masonry assessment 227
in-plane wall. *See* shear wall
interconnection of elements
deficiency-based procedure guidelines for 420–421, 420*f*
procedures 83
interior veneers 290
isolation interface, defined 5
isolation system, defined 5
isolator unit, defined 5

joint, defined 5

kinematic interaction and radiation damping soil–structure interaction effects 141–143, 141*e*, 142*e*, 142*f*, 143*e*
king stud, defined 5
knee joint, defined 6

landslides
defined 6
mitigation 129
site characterization 128

large-scale load tests, masonry assessment 227
lateral spreading, mitigation 129
level of seismicity
defined 6
performance objectives 49, 49*e*, 49*t*
seismic evaluation process 22
seismic retrofit process 26
Tier 1 screening 61
life safety
building performance level 39, 42, 43*f*, 43*t*, 44
Tier 1 screening 64–66
life safety structural checklists, Tier 1
concrete frames with infill masonry shear walls (C3) and with flexible diaphragms (C3A) 362–363
concrete moment frames (C1) 357–358
concrete shear walls with stiff diaphragms (C2) and flexible diaphragms (C2A) 360–361
dual systems with backup steel moment frames and stiff diaphragms (S4) 352–353
precast concrete frames with shear walls (PC2) 367–368
precast concrete frames without shear walls (PC2A) 369–370
precast or tilt-up concrete shear walls with flexible diaphragms (PC1) and stiff diaphragms (PC1A) 365–366
reinforced masonry bearing walls with flexible diaphragms (RM1) stiff diaphragms (RM2) 371–372
steel braced frames with stiff diaphragms (S2) and flexible diaphragms (S2A) 348–349
steel frames with infill masonry shear walls and stiff diaphragms (S5) and flexible diaphragms (S5A) 355–356
steel light frames (S3) 350–351
steel moment frames with stiff diaphragms (S1) and flexible diaphragms (S1A) 345–346
unreinforced masonry bearing walls with flexible diaphragms (URM) and stiff diaphragms (URMA) 373–374
wood frames, commercial and industrial (W2) 343–344
wood light frames (W1) and multi-story, multi-unit residential wood frame (W1A) 341–342
light fixtures 279*t*, 299, 424
light framing, defined 6
lightweight concrete, defined 6
limit deformation, defined 6
limited performance objectives 34
limited-deformability component, defined 6
linear dynamic procedure (LDP) 26
analysis procedures and acceptance criteria 109
defined 6
linear procedures
acceptance criteria 118–119, 118*e*, 119*e*
analysis procedure selection 103–104, 103*e*, 104*e*, 104*f*
drilled shafts 140–141
overturning 99, 99*e*
linear static procedure (LSP) 26
analysis procedures and acceptance criteria 105–109, 106*e*, 106*f*, 107*e*, 107*t*, 108*e*
defined 6
link beam, defined 6
link intermediate web stiffeners, defined 6
link rotation angle, defined 6
liquefaction
deficiency-based procedure guidelines for 421
defined 6
mitigation 129
site characterization 124–128, 125*t*
load and resistance factor design, defined 6
load duration, defined 6
load path
deficiency-based procedure guidelines 391
defined 6
Tier 2 deficiency-based evaluation and retrofit 77
load sharing, defined 6
load/slip constant, defined 6
local component, defined 6
local modification of components, as seismic retrofit strategy 27
low-deformability component, defined 6
lower-bound strength, defined 6
lumber, defined 6

mandatory mitigation, ASCE 41-13 Standard and 431–433
marquees 291–292
masonry 225–250
anchorage to masonry walls 248–249
chimneys, deficiency-based procedure guidelines 426
condition assessment and material properties 225–232
condition assessment methods 226–229
knowledge factor 232
properties of in-place materials and components 229–232, 229*t*, 230*e*, 232*t*
defined 6
foundation elements 249–250
infills 244–248
out-of-plane actions 247–248, 248*e*, 248*t*
in-plane actions 233*e*, 244–247, 245*e*, 245*f*, 246*e*, 246*f* 247*t*
types of 244
scope 225
shear strength assessment 229–230, 229*e*, 230*e*
veneers, deficiency-based procedure guidelines 425
walls 229*t*, 232–233, 233*f*, 243*t*, 247*t*
deficiency-based procedure guidelines for 397
reinforced masonry wall out-of-plane actions 243–244
reinforced masonry walls and wall piers in-plane 233*f*, 242–243, 243*t*
types of 233–234
unreinforced masonry walls and wall piers subject to in-plane actions 234–241, 235*e*, 236*e*, 236*f*, 237*e*, 237*f*, 238*e*, 239*t*, 240*f*, 241*f*
unreinforced masonry walls and wall piers subject to out-of-plane actions 232*t*, 241–242, 241*t*
mass
deficiency-based procedure guidelines for 394, 394*f*
irregularity, Tier 2 deficiency-based evaluation and retrofit 78
reduction, as seismic retrofit strategy 27–28
material properties, acceptance criteria 117–118, 118*t*
mat-formed panel, defined 6
mathematical modeling, analysis procedures and acceptance criteria 94–96, 95*e*
maximum considered earthquake, risk-targeted (MCER), defined 6
maximum displacement, defined 6
mean return period, defined 6
means of egress, defined 6
mechanical components. *See* architectural, mechanical, and electrical components

mechanical pulse velocity, masonry assessment 227
metal deck diaphragms
deficiency-based procedure guidelines for 416
with nonstructural topping 173–174
with structural concrete topping 172–173
metal stud backup systems, deficiency-based procedure guidelines 426
mezzanines
deficiency-based procedure guidelines for 392
Tier 1 checklist 339–340
Tier 2 deficiency-based evaluation and retrofit 77
mitigation, ASCE 41-13 Standard and 431–436
moisture content, defined 6
moment frames
concrete 191–205
deficiency-based procedure guidelines for 401–402
posttensioned concrete beam-column moment frame 192*t*, 193*t*, 194*t*, 195*t*, 199–201, 199*t*, 200*t*
reinforced concrete beam-column moment frames 191–199, 192*f*, 192*t*, 193*t*, 194*t*, 195*t*, 196*e*, 196*t*, 197*e*, 197*f*, 197*t*, 198*e*, 199*t*
slab-column moment frames 201–205, 201*e*, 202*e*, 202*t*, 203*f*, 204*t*
types of frames 191
deficiency-based procedure guidelines for 397–403, 398*f*, 399*f*, 401*f*, 403*f*
moment-resisting frame defined 6
precast concrete, deficiency-based procedure guidelines for 402–403, 403*f*, 404*f*
steel 150–170
deficiency-based procedure guidelines for 399–400, 399*f*
fully restrained moment frames 150, 153–161, 153*t*, 154–155*t*, 155*e*, 156*e*, 156*t*, 157*e*, 158*e*, 159*e*, 160*e*
partially restrained moment frames 153*t*, 161–164, 162*e*, 162*f*, 163*e*, 163*f*, 164*f*
Tier 1 screening 70–71, 70*e*
Tier 2 deficiency-based evaluation and retrofit 78–80, 79
multidirectional seismic events, analysis procedures and acceptance criteria 96–98, 97*t*

narrow wood shear wall, defined 6
nominal size, defined 6
nominal strength, defined 6
nonbearing wall, defined 6
noncompact member, defined 6
noncomposite masonry wall, defined 6
nonlinear dynamic procedure (NDP) 26
analysis procedures and acceptance criteria 113–114
nonlinear procedures
acceptance criteria 119
analysis procedure selection 104–105, 112*e*
drilled shafts 141
overturning 99
nonlinear static procedure (NSP) 26
analysis procedures and acceptance criteria 109–113, 110*f*, 111*e*, 111*t*, 112*e*
nonstructural components
deficiency-based procedure guidelines for 422–430
building contents and furnishing 427
ceiling systems 423–424
cladding and glazing 424–425
ducts 429
elevators 430
hazardous materials 429–430
light fixtures 424
masonry chimneys 426
masonry veneer 425
mechanical and electrical equipment 427–428
metal stud backup systems 426
parapets, cornices, ornamentation, and appendages 426
partitions 423
piping 428–429
stairs 426–427
defined 6
Tier 1 checklists 376–379
nonstructural performance levels 39–40, 40*t*, 41*t*
defined 6
life safety nonstructural performance level 42
nonstructural performance not considered 40, 42–43
operational nonstructural performance level 42
position retention nonstructural performance level 42
normal wall, defined 6
notations listed 9–21

occupancy, defined 6
on-site investigation, Tier 1 screening 61, 63, 63*t*, 64*t*, 65*t*
open front, defined 6
operational building performance level 42, 43, 43*f*, 43*t*
ordinary moment frame, defined 6–7
oriented strand board, defined 7
out-of-plane wall, defined 7
overturning
analysis procedures and acceptance criteria 99, 99*e*
deficiency-based procedure guidelines for 422
defined 7
isolation system and 317
Tier 2 deficiency-based evaluation and retrofit 78
owner, defined 7

panel, defined 7
panel rigidity or stiffness, defined 7
panel shear, defined 7
panel zone, defined 7
parapets, ornamentation, and appendages 291, 291*f*
deficiency-based procedure guidelines 426
parapet defined 7
see also cornices
partially grouted masonry wall, defined 7
partially restrained (PR) moment frames 153*t*, 161–164, 162*e*, 162*f*, 163*e*, 163*f*, 164*f*
particleboard, defined 7
partitions 289, 423
passive energy dissipation systems 320–329
design review 327
detailed system requirements 327
general requirements 320–321
implementation of 321–322
linear procedures 323–325, 324*e*, 325*e*
modeling of devices 322–323, 322*e*, 322*f*
nonlinear procedures 325–327, 325*e*, 326*f*, 326*t*
required tests of 327–329, 329*e*
P-Δ effects
analysis procedures and acceptance criteria 98
defined 7
perforated infill panel, defined 7
perforated wall, defined 7
performance level, Tier 1 screening 61

performance objectives 31, 32*t*
Basic Performance Objective Equivalent to New Building Standards (BPON) 34–35, 35*t*
Basic Performance Objective for Existing Buildings (BPOE) 31–34, 32*t*
defined 7
enhanced performance objectives 34
level of seismicity 49, 49*e*, 49*t*
limited performance objectives 34
in seismic evaluation process 22
seismic hazard
general procedure when caused by ground shaking 44–47, 46*e*, 46*t*, 47*e*, 47*f*
site-specific procedure for hazards caused by ground shaking 48–49
in seismic retrofit process 26
system-specific performance procedures 35
target building performance levels 35–36, 35*t*, 37–38*t*
designation of levels 43–44, 43*f*, 43*t*
nonstructural performance levels 39–40, 40*t*, 41*t*, 42–43
structural performance levels and ranges 36, 37–38*t*, 38–39
period, Tier 1 screening 69, 69*e*
pier, defined 7
pile foundations
steel 176
strengths and stiffness 131*f*, 139–140, 140*e*
pipes and piping
deficiency-based procedure guidelines 428–429
fire suppression 295–296
fluid piping other than fire suppression 296–297
pressure piping 295
pitch or spacing, defined 7
plate shear walls 170–171
platform framing, defined 7
plywood, defined 7
pointing
defined 7
masonry assessment 228–229
Poisson's Ratio parameters, load-formation for shallow foundations 132, 132*e*, 132*t*
pole, defined 7
pole structure, defined 7
poor condition, defined 7
position retention 42
posttensioning anchors, deficiency-based procedure guidelines for 397, 397*f*
posttensioned concrete beam-column moment frame 192*t*, 193*t*, 194*t*, 195*t*, 199–201, 199*t*, 200*t*
pounding, defined 7
precast concrete
connections, Tier 1 screening 70, 70*e*
diaphragms 221
foundation walls, deficiency-based procedure guidelines for 397
frames 205–206
frames with shear walls (PC2)
immediate occupancy structural checklists, Tier 1 368–369
life safety structural checklists, Tier 1 367–368
frames without shear walls (PC2A)
immediate occupancy structural checklists, Tier 1 370–371
life safety structural checklists, Tier 1 369–370
moment frames, deficiency-based procedure guidelines for 402–403, 403*f*, 404*f*
precast concrete diaphragms 221
shear walls 217–219
deficiency-based procedure guidelines for 406
Tier 2 deficiency-based evaluation and retrofit 80–81
tilt-up concrete shear walls with flexible diaphragms (PC1) and with stiff diaphragms (PC1A)
immediate occupancy structural checklists, Tier 1 366–367
life safety structural checklists, Tier 1 365–366
prefabricated panels 287
preservative, defined 7
pressure piping 295
pressure-preservative-treated wood, defined 7
prestressed elements, Tier 1 screening 70, 70*e*
primary (strong) panel axis, defined 7
primary and secondary components
acceptance criteria 115
mathematical modeling, analysis procedures 95–96
primary component defined 7
secondary component defined 8
probability of exceedance, defined 7
pseudo seismic forces
defined 7
Tier 1 screening 67–68, 67*e*, 68*e*, 68*t*
punched metal plate, defined 7

quick check, defined 7

radiation damping soil–structure interaction effects 141–143, 141*e*, 142*e*, 142*f*, 143*e*
radiography, masonry assessment 227
reduced safety structural performance level 39
redundancy, defined 7
reentrant corner, defined 7
reinforced concrete beam-column moment frames 191–199, 192*f*, 192*t*, 193*t*, 194*t*, 195*t*, 196*e*, 196*t*, 197*e*, 197*f*, 197*t*, 198*e*, 199*t*
reinforced masonry
bearing walls with flexible (RM1) and stiff diaphragms (RM2)
immediate occupancy structural checklists, Tier 1 372–373
life safety structural checklists, Tier 1 371–372
defined 7
shear walls, deficiency-based procedure guidelines for 406–407
wall piers in-plane 233*f*, 242–243, 243*t*
walls out-of-plane 243–244
removal/reduction of existing irregularities, as seismic retrofit strategy 27
repointing, defined 7
required member resistance (required strength), defined 7
resistance, defined 7
resistance factor, defined 7
retrofit, definitions 7. *See also* evaluation and retrofit requirements
rigid component, defined 8
rigid diaphragm, defined 8
risk category, defined 8
rough lumber, defined 8
row of fasteners, defined 8
running bond, defined 8

scragging, defined 8
seasoned lumber, defined 8
secondary component, defined 8
seismic earth pressure, foundations and geological site hazards 143, 143*e*
seismic evaluation process 21–24, 23*f*
as-built information 22, 24
defined 1
level of seismicity 22
performance objective selection 22
procedures 24, 54–54*t*, 56*t*
report 24
seismic hazard
general procedure when caused by ground shaking 44
adjustment for site class 46, 46*e*, 46*t*, 47*e*
BSE-1E spectral response acceleration parameters 46
BSE-1N spectral response acceleration parameters 45
BSE-2E spectral response acceleration parameters 45–46
BSE-2N spectral response acceleration parameters 45
general response spectrum 47, 47*e*, 47*f*
response acceleration for other probabilities of exceedance 46
site-specific procedure for hazards caused by ground shaking 48
ground motion acceleration histories 48–49
site-specific response spectra 48
seismic hazard level
defined 8
Tier 1 screening 61
Tier 2 deficiency-based evaluation and retrofit 73
seismic isolation and energy dissipation 303–329
energy dissipation definitions 5
other response controls 329
passive energy dissipation systems 320–329
design review 327
detailed system requirements 327
general requirements 320–321
implementation of 321–322
linear procedures 323–325, 324*e*, 325*e*
modeling of devices 322–323, 322*e*, 322*f*
nonlinear procedures 325–327, 325*e*, 326*f*, 326*t*
required tests of 327–329, 329*e*
as retrofit strategy 28
scope 303–304
seismic isolation systems 304–320
detailed system requirements 316–318
general design criteria 311–313
general requirements 304
linear procedures 313–315, 313*e*, 314*e*
mechanical properties and modeling of isolation systems 304–311, 305*e*, 306*e*, 306*f*, 306*t*, 307*e*, 307*f*, 308*e*, 308*f*, 309*e*, 309*f*, 310*e*, 310*f*, 311*e*
nonlinear procedures 315–316, 315*e*
nonstructural components 316
testing and design properties 318–320, 319*e*, 320*e*
seismic retrofit process 21–22, 24–30, 25*f*
as-built information 26
construction documents 28
construction quality assurance 28–29
defined 1
design verification 28
initial considerations 24, 26
jurisdictional authority responsibilities 29–30
level of seismicity 26
performance objective selection 26
procedures 26
strategies 26–28
seismic-force-resisting systems
deficiency-based procedure guidelines for 394–412
braced frames 409–412, 410*f*, 411*f*, 412*f*
moment frames 397–403, 398*f*, 399*f*, 401*f*, 403*f*
shear walls 403–409, 404*f*, 405*f*, 406*f*, 407*f*
defined 8
shallow footings
considered rigid (Method 1) 133–137, 133*e*, 133*f*, 134*t*, 135*f*, 136*f*, 136*t*
considered rigid (Method 2) 137–138, 138*f*
not rigid relative to soil (Method 3) 138–139, 138*e*, 139*e*
shallow foundations
defined 8
load-formation for 130–139, 131*e*, 131*f*, 132*e*
retrofit measures 144
shared element condition, evaluation and retrofit requirements 55
shear modulus, masonry assessment 230–231
shear transfer, deficiency-based procedure guidelines for 418–419
shear walls 259–270
CFS light-frame shear walls 257*f*, 262, 262*e*, 263*t*, 264*t*, 265–270, 266*e*
concrete 209–217, 209*t*, 210*f*, 212*e*, 212*f*, 213*f*, 213*t*, 214*t*, 215*t*, 216*t*
deficiency-based procedure guidelines for 403–409, 404*f*, 405*f*, 406*f*, 407*f*
defined 8
precast concrete 217–219
Tier 1 screening 69, 69*e*
Tier 2 deficiency-based evaluation and retrofit 80–81
URM alternative procedures 336*e*, 337*e*
wood shear walls 260–262
sheathing, defined 8
short captive column, defined 8
shrinkage, defined 8
site and foundation information, evaluation and retrofit requirements 54–55
site class, defined 8
site-specific procedure for hazards caused by ground shaking 48
ground motion acceleration histories 48–49
site-specific response spectra 48
slab-column moment frames 201–205, 201*e*, 202*e*, 202*t*, 203*f*, 204*t*
slip-critical joint, defined 8
slope failure, deficiency-based procedure guidelines for 421
sloping sites, deficiency-based procedure guidelines for 422
soft story
deficiency-based procedure guidelines for 393, 393*f*
Tier 1 checklist 340
Tier 2 deficiency-based evaluation and retrofit 77–78
soil conditions, mitigation 129
soil material improvements, foundation retrofit 144
soil shear modulus, load-formation for shallow foundations 132, 132*e*, 132*t*
soil-structure interaction, analysis procedures and acceptance criteria 98
solid infill panel, defined 8
solid masonry unit, defined 8
solid wall, defined 8

special moment frame (SMF), defined 8
spectral acceleration, Tier 1 screening 68–69, 68*e*
stack bond, defined 8
stacks. *See* chimneys and stacks
stairs 292
deficiency-based procedure guidelines 426–427
Tier 1 checklist 378
steel 145–177
braced frames 164–170
buckling-restrained braced frames 164–170
concentrically braced frames 164, 164–169, 409, 409*f*, 411, 411*f*
eccentrically based frames 167–168, 167*e*, 168*e*, 411–412, 412*f*
braced frames with stiff diaphragms (S2) and with flexible diaphragms (S2A)
immediate occupancy structural checklists, Tier 1 349–350
life safety structural checklists, Tier 1 348–349
cast and wrought iron 176–177, 177*e*
deterioration of 396
diaphragms
archaic diaphragms 175
bare metal deck diaphragms 171–172
chord and collector elements 175–176
horizontal steel bracing (steel truss diaphragms) 174–175
metal deck diaphragms with nonstructural topping 173–174
metal deck diaphragms with structural concrete topping 172–173
frames with infill masonry shear walls and stiff diaphragms (S5) and flexible diaphragms (S5A)
immediate occupancy structural checklists, Tier 1 356–357
life safety structural checklists, Tier 1 355–356
frames with infills 171
general assumptions and requirements 149–150
light frames (S3)
immediate occupancy structural checklists, Tier 1 351–352
life safety structural checklists, Tier 1 350–351
material properties and condition assessment 146–149
condition assessment 148–149
knowledge factor 149
in-place materials and components 145–148, 146*t*, 147*t*
moment frames 150
fully restrained (FR) moment frames 150, 153–161, 153*t*, 154–155*t*, 155*e*, 156*e*, 156*t*, 157*e*, 158*e*, 159*e*, 160*e*
moment frames with stiff diaphragms (S1) and flexible diaphragms (S1A), immediate occupancy structural checklists 346–348
moment frames with stiff diaphragms (S1) and flexible diaphragms (S1A), life safety structural checklist 345–346
partially restrained (PR) moment frames 153*t*, 161–164, 162*e*, 162*f*, 163*e*, 163*f*, 164*f*
pile foundations 176
plate shear walls 170–171, 170*e*
scope 146
steel reinforcement tensile strength, masonry assessment 231
stiff diaphragm, defined 8
stiffness and strength assumptions, mathematical modeling, analysis procedures 96
storage racks 299–300
defined 8
story, defined 8
story drift for moment frames, Tier 1 screening 69, 69*e*
story shear force
defined 8
Tier 1 screening 68, 68*e*
strength and stiffness
strength defined 8
Tier 1 screening 69–71, 69*e*, 70*e*, 70*t*
stress resultant, defined 8
strong column–weak beam, defined 8
strong-back system, defined 8
structural component, defined 8
structural performance levels and ranges 36, 37–38*t*, 38–39
collapse prevention structural performance level 39
defined 8
enhanced safety structural performance range 36, 38–39
immediate occupancy structural performance level 36
life safety structural performance level 39
reduced safety structural performance level 39
structural performance not considered 39
structural performance range, defined 8
structural system, defined 8
structure modification, mitigation 129
structure sharing common elements, analysis procedures and acceptance criteria 102
structure walls and their anchorages, analysis procedures and acceptance criteria 101–102, 101*e*, 101*t*
stud, defined 8
subassembly, defined 8
subdiaphragm, defined 8
superstructure, defined 8
supplemental energy dissipation, as seismic retrofit strategy 28
surface fault rupture, deficiency-based procedure guidelines for 422
surface hardness assessment 227
system-specific performance procedures 35, 331–338
scope 331–332
unreinforced masonry walls (URMs) 332–338
analysis 334–338, 334*t*, 335*e*, 335*t*, 336*e*, 336*f*, 336*t*, 337*e*
general requirements 332–334, 333*f*, 334*f*
scope 332

target building performance levels 35–36, 35*t*, 37–38*t*
designation of levels 43–44, 43*f*, 43*t*
nonstructural performance levels 39–40, 40*t*, 41*t*, 42–43
structural performance levels and ranges 36, 37–38*t*, 38–39
target displacement, defined 8
tie-down, defined 8
Tier 1 checklists 339–379
checklists selection and use 66–67, 67*t*
immediate occupancy structural checklists 340–341
concrete frames with infill masonry shear walls (C3) and with flexible diaphragms (C3A) 363–364
concrete moment frames (C1) 358–360
concrete shear walls with stiff diaphragms (C2) and flexible diaphragms (C2A) 361–362
dual systems with backup steel moment frames and stiff diaphragms (S4) 353–355

precast concrete frames with shear walls (PC2) 368–369
precast concrete frames without shear walls (PC2A) 370–371
precast or tilt-up concrete shear walls with flexible diaphragms (PC1) and stiff diaphragms (PC1A) 366–367
reinforced masonry bearing walls with flexible diaphragms (RM1) and stiff diaphragms (RM2) 372–373
steel braced frames with stiff diaphragms (S2) and flexible diaphragms (S2A) 349–350
steel frames with infill masonry shear walls and stiff diaphragms (S5) and flexible diaphragms (S5A) 356–357
steel light frames (S3) 351–352
steel moment frames with stiff diaphragms (S1) and flexible diaphragms (S1A) 346–348
unreinforced masonry bearing walls with flexible diaphragms (URM) and stiff diaphragms (URMA) 374–376
wood frames, commercial and industrial (W2) 344–345
wood light frames (W1) and multi-story, multi-unit residential wood frame (W1A) 342–343
life safety structural checklists 339–340
concrete frames with infill masonry shear walls (C3) and with flexible diaphragms (C3A) 362–363
concrete moment frames (C1) 357–358
concrete shear walls with stiff diaphragms (C2) flexible diaphragms (C2A) 360–361
dual systems with backup steel moment frames and stiff diaphragms (S4) 352–353
precast concrete frames with shear walls (PC2) 367–368
precast concrete frames without shear walls (PC2A) 369–370
precast or tilt-up concrete shear walls with flexible diaphragms (PC1) and stiff diaphragms (PC1A) 365–366
reinforced masonry bearing walls with flexible diaphragms (RM1) and stiff diaphragms (RM2) 371–372
steel braced frames with stiff diaphragms (S2) and flexible diaphragms (S2A) 348–349
steel frames with infill masonry shear walls and stiff diaphragms (S5) and flexible diaphragms (S5A) 355–356
steel light frames (S3) 350–351
steel moment frames with stiff diaphragms (S1) and flexible diaphragms (S1A) 345–346
unreinforced masonry bearing walls with flexible diaphragms (URM) and stiff diaphragms (URMA) 373–374
wood frames, commercial and industrial (W2) 343–344
wood light frames (W1) and multi-story, multi-unit residential wood frame (W1A) 341–342
nonstructural checklist 376–379
Tier 1 screening 61–71
analysis 67
seismic forces 67–68, 67*e*, 68*e*, 68*t*
strength and stiffness quick checks 69–71
benchmark buildings 64–66, 66*t*
checklists selection and use 66–67, 67*t*
defined 8
procedures 22, 23*f*
scope 61, 62*t*
scope of investigation required 61, 63, 63*t*, 64*t*, 65*t*
Tier 2 deficiency-based evaluation and retrofit 73–88
defined 8
evaluation requirements 76–77
general requirements 73
acceptance criteria 76
analysis methods 76
as-built information 73, 76
condition assessment 76
knowledge factor 76
performance and seismic hazard level 52–54*t*, 56*t*, 73, 76
procedure 22, 23*f*, 25*f*, 51, 56*t*, 58
procedure for basic configuration of building systems
building configuration 77–78
general 77
geological site hazards and foundation components 78
procedures for connections 82–83
procedures for diaphragms 82
procedures for seismic-force-resisting systems
braced frames 81
general 78
moment frames 78–80
shear walls 80–81
requirements 83–84, 84*t*, 85*t*, 86*t*, 87*t*, 88*t*
scope 73, 74–75*t*
Tier 3 retrofit, defined 9
Tier 3 systemic evaluation procedure 22, 23*f*, 25*f*, 89–92
data collection requirements 89–91, 90*t*
defined 8
evaluation and retrofit procedures 59
evaluation requirements 91
retrofit requirements 91–92
scope 89
timber, defined 9
time-effect factor, defined 9
torsion
deficiency-based procedure guidelines for 394–395, 395*f*
irregularity 78
mathematical modeling, analysis procedures 94–95, 95*e*
total design displacement, defined 9
total maximum displacement, defined 9
transverse wall, defined 9
triggered mitigation, ASCE 41-13 Standard and 434–436

ultimate deformation, defined 9
ultrasonic pulse velocity, masonry assessment 227
unreinforced masonry walls (URMs)
bearing wall defined 9
bearing walls with flexible diaphragms (URM) and stiff diaphragms (URMA)
immediate occupancy structural checklists, Tier 1 374–376
life safety structural checklists, Tier 1 373–374
condition assessment 228–229
deficiency-based procedure guidelines 396–397
defined 9
retrofitting 233–234
shear walls 81, 407
system-specific performance procedures 332–338
analysis 334–338, 334*t*, 335*e*, 335*t*, 336*e*, 336*f*, 336*t*, 337*e*
general requirements 332–334, 333*f*, 334*f*
scope 332
wall piers subject to in-plane actions 234–241, 235*e*, 236*e*, 236*f*, 237*e*, 237*f*, 238*e*, 239*t*, 240*f*, 241*f*

wall piers subject to out-of-plane actions 232*t*, 241–242, 241*t*
unreinforced masonry walls (URMs), alternative procedures 332–338
analysis 334–338
cross walls 334–335, 334*t*, 335*e*
diaphragms 335, 335*e*, 335*t*, 336*f*, 336*t*
shear walls 336–338, 336*e*, 337*e*
general requirements 332–334, 333*f*, 334*f*
scope 332

V-braced frame, defined 9
velocity-dependent energy dissipation devices, defined 9
veneers
deficiency-based procedure guidelines for 425
defined 9
exterior 285–286
interior 290
vertical elements, connection procedures 82–83
vertical components 418–419
vertical compression stress, masonry assessment 227
vertical irregularities
deficiency-based procedure guidelines for 393–394, 394*f*
defined 9
Tier 2 deficiency-based evaluation and retrofit 78
vertical seismic events, analysis procedures and acceptance criteria 98
visual assessment, of masonry 226
voluntary mitigation, ASCE 41-13 Standard and 433–434

waferboard, defined 9
wall pier, defined 9
water heaters 294–295
weak story 77, 393
wind-restraint system, defined 9
wood and cold-formed steel (CFS) light frame 251–276
general assumptions and requirements 257–279
components supporting discontinuous shear walls 258
connection requirements 258
retrofit measures 258–259
stiffness 257, 257*f*
strength and acceptance 257–258
material properties and condition assessment 251–257
in-place materials and components 252–257, 254*t*, 255*t*
other wood elements and components 276
scope 251
shear walls 259–270
types of CFS light-frame shear walls 257*f*, 262, 262*e*, 263*t*, 264*t*, 265–269, 266*e*
types of wood shear walls 260–262
stiffness and strength criteria for CFS shear walls 257*f*, 269–270
wood diaphragms
deficiency-based procedure guidelines for 415–416
stiffness and strength assumptions 257*f*, 263*t*, 264*t*, 272–275, 272*e*, 274*e*
types of 270–272
wood foundations 275–276
wood deterioration, deficiency-based procedure guidelines for 396
wood frame buildings
commercial and industrial (W2)
immediate occupancy structural checklists, Tier 1 344–345
life safety structural checklists, Tier 1 343–344
walls in 81, 408–409
wood light frames (W1) and multi-story, multi-unit residential wood frame (W1A)
immediate occupancy structural checklists, Tier 1 342–343
life safety structural checklists, Tier 1 341–342
wood structural panel, defined 9
wrought iron 176–177, 177*e*
defined 9
wythe, defined 9

X-braced frame, defined 9

Y-braced frame, defined 9
yield story drift, defined 9